United States Patent

Ance

[15] **3,643,006**

[45] **Feb. 15, 1972**

[54] **MECHANICAL, SOLDERLESS GROUND WIRE CONNECTORS FOR TELEPHONIC CABLE SHIELDING JACKETS**

[72] Inventor: **Louis Ance**, Hickory, N.C.

[73] Assignee: **Superior Continental Corporation**, Hickory, N.C.

[22] Filed: **Mar. 3, 1971**

[21] Appl. No.: **120,489**

[52] **U.S. Cl.** .....**174/84 R**, 29/628, 174/78.84 C, 174/94 R, 339/95 R, 339/97 C

[51] **Int. Cl.** **H02g 15/08**

[58] **Field of Search** .....174/88 R, 78, 94 R, 84 R; 339/95, 97, 14 R; 29/628

[56] **References Cited**

UNITED STATES PATENTS

3,253,247	5/1966	Vos	174/78 UX
3,377,422	4/1968	Trimble	174/88 R

Primary Examiner—Darrell L. Clay
Attorney—Roy B. Moffitt

[57] **ABSTRACT**

Disclosed is a bonding clip adapted to be connected to a bonding harness and for forming a joint that maintains electrical and mechanical continuity between the shielding of one cable terminus to another. The clip is made from a piece of metal, U-shaped in cross section, which has two juxtapositioned terminal portions. Each terminal portion has an aperture therein that is aligned not only with that aperture in the opposing terminal portion but also with an aperture through a coated cable shield. The terminal portions have spaced-apart perforations defining inwardly extending plastic and metal piercing protuberances whereby pressure applied to said terminal portions by a connector means, disposed through the apertures, exert a force to thrust said protuberances through the plastic covering and the metal shield. Located in the aligned apertures is a connector means that has a median shank and two terminal portions, one of which has unconnected grooves therein and is nested inside of an annulus sleevelike fitting that has annuluslike protuberances on the innermost surface thereof, the protuberances being positioned so that they mechanically interfit and essentially fill the unconnected grooves.

3 Claims, 2 Drawing Figures

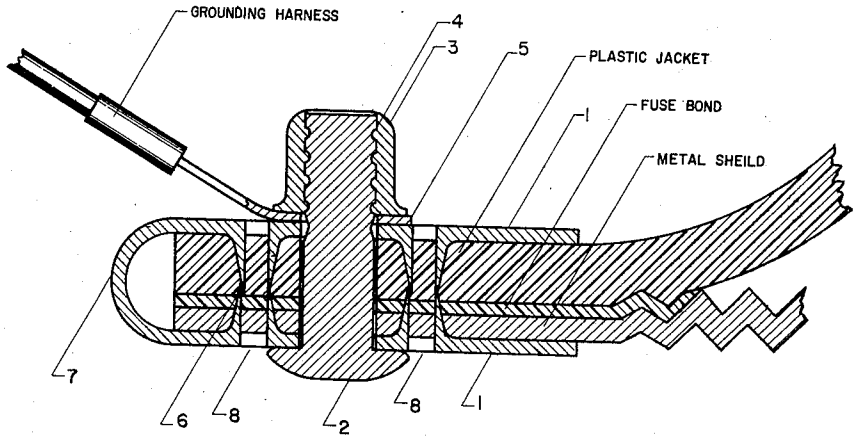

PATENTED FEB 15 1972

3,643,006

SHEET 1 OF 2

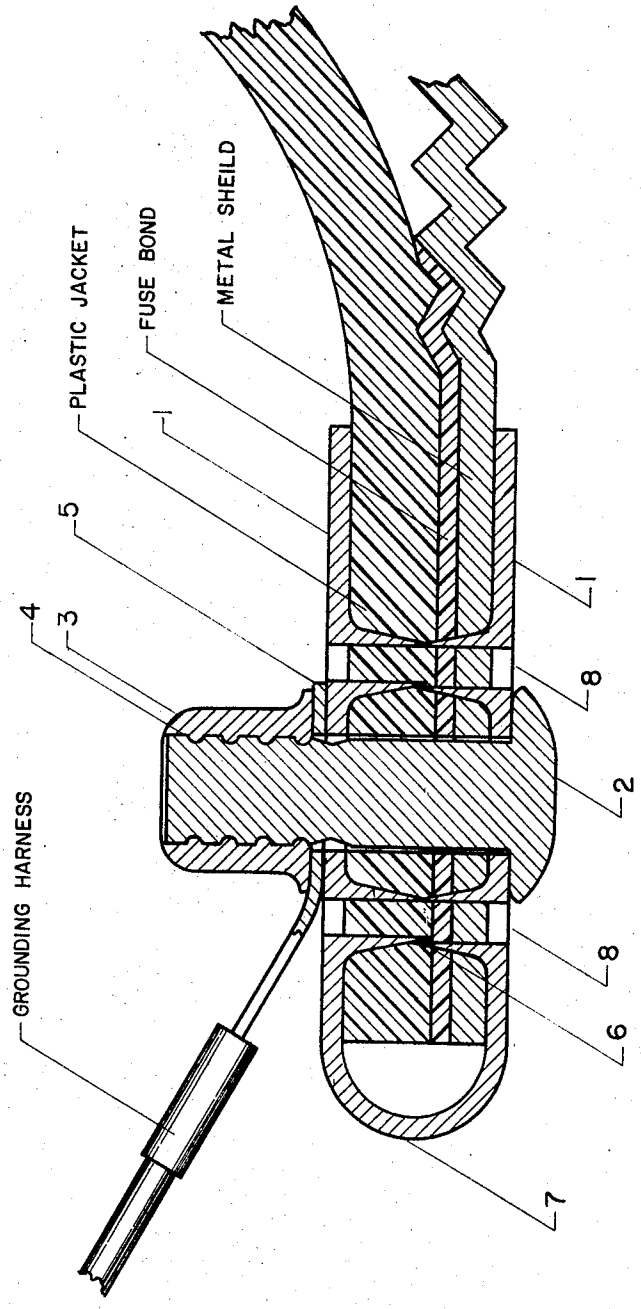

FIG. 1

LOUIS ANCE

INVENTOR

Roy B. Moffitt

ATTORNEY

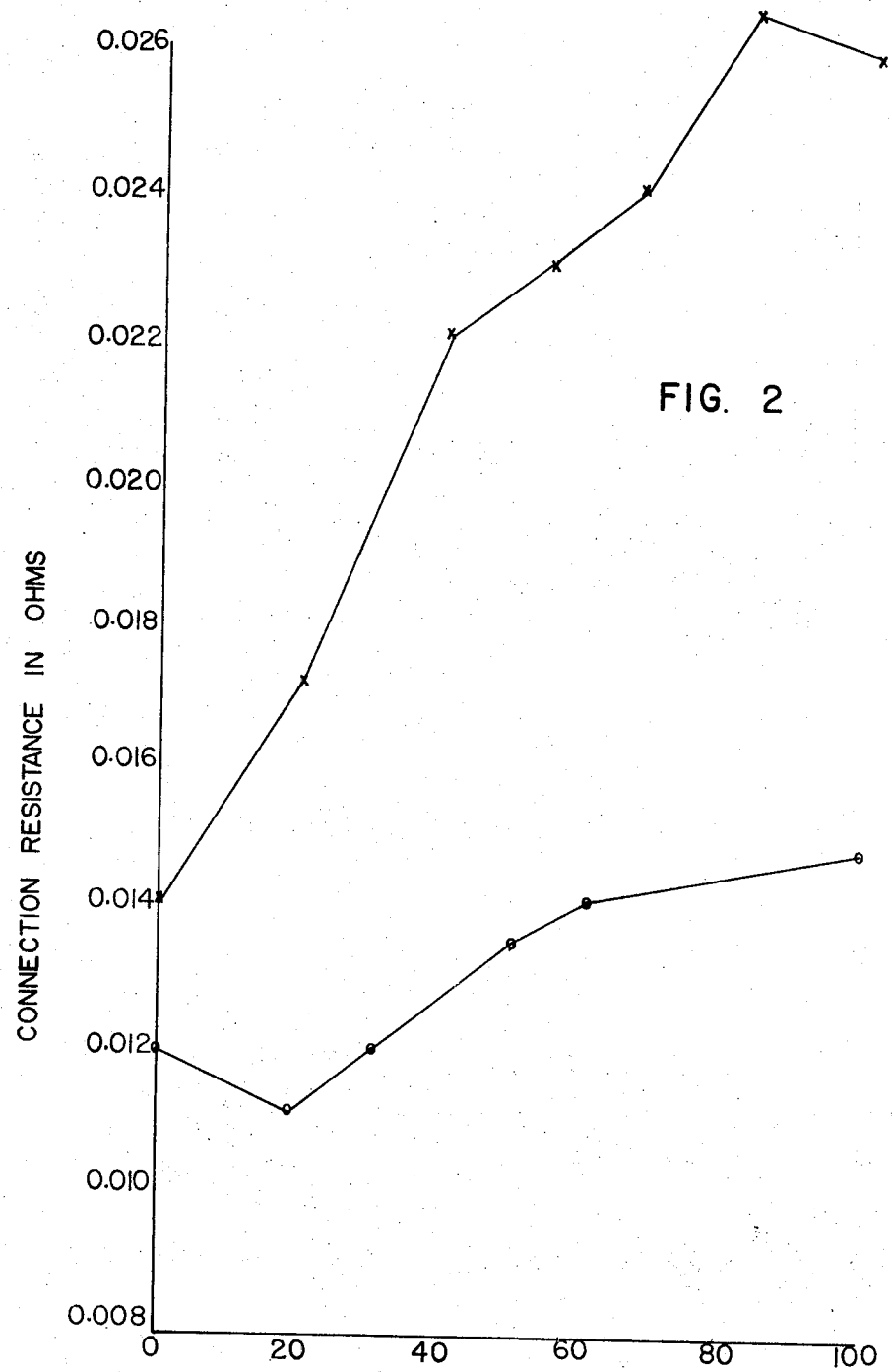

FIG. 2

LOUIS ANCE
INVENTOR

Roy B. Mottin

ATTORNEY

MECHANICAL, SOLDERLESS GROUND WIRE CONNECTORS FOR TELEPHONIC CABLE SHIELDING JACKETS

BACKGROUND OF THE INVENTION

1. Field of the Invention

The present invention relates to a joint that is used in concert with a grounding harness. A grounding harness is a means to form an electrical connection (path) and is employed to maintain the electrical continuity in the shields in two cable segments. Telephone cables are usually made up of a core, comprised of a plurality of insulated electrical conductors, surrounded by a metallic shield that is nested inside a tubular plastic outer covering called a jacket. In order to maintain the electrical continuity of the shield between two cable segments, a firm joint must be created, mechanically grasping and electrically connecting the shield of one cable terminus to the shield of a second cable terminus.

2. Description of the Prior Art

Presently made telephone cable generally have a structure made up of at least a core, a metallic shield and a plastic jacket. The core is comprised of a plurality of insulated electrical conductors, which is nested inside of a tubular-shaped metallic shield. This shield is further nested inside of a plastic covering, known as a jacket. It has been a standard manufacturing practice, in the manufacture of cable, to prevent any bonding (fusion) at the interface between a plastic film coated on the outermost surface of the metallic shield and the plastic jacket extruded thereover, Inhibition of fuse bonding was accomplished by: applying a lubricant to the plastic-coated shield, and regulating the extrusion temperature and the speed of extrusion of the jacket.

However, it has been found that when the jacket is not allowed to adhere to the shield, the jacket, in service, has a tendency to "run." That is to say, the outer jacket will tend to move independently of the rest of the cable (core and shield) and "bunch up" at certain designated spots causing the jacket, at these spots, to buckle and subsequently rupture. Such ruptures created avenues for moisture penetration and are obviously undesirable. In recent technology, it has become necessary, for various and sundry well-known reasons, to use a shield that has bonded to it a thin coating of plastic, this plastic being a graft copolymer of polyethylene and a monomer with reactive carboxyl group such as acrylic acid or acrylic acid ester. Such plastics are well known and are described in U.S. Pat. Nos. 2,987,501 and 3,027,346, the disclosures found in these patents being herein incorporated by express reference.

When plastic-coated shield members are used, see U.S. Pat. No. 3,233,036, the disclosure of which is herein incorporated by reference, a great deal of care, the prior art teaches, must be taken when extruding a plastic jacket thereover. During manufacture of cable using a plastic-coated shield, it has been found desirable, by prior investigators, to prevent adherence between the outer film of the shield and the jacket extruded thereover. This has been accomplished, as taught by the prior art, by applying a lubricant to the laminated shield (plastic-coated shield) and by regulating the extrusion temperature and speed of extrusion of the jacket. The prior art teaches that a complete fusion between the outer jacket and an outer plastic coating of the metal shield will increase the difficulty of stripping the cable for splicing. More often than not, this fusion bond would have the undesirable effect of, at times, exceeding the bond force of the outer shield laminate to the metallic shield per se so that during bending of the cable or stripping of the jacket at cable ends, delamination of the outer film of the shield would result, thereby exposing the metal shield to corrosive attack.

Therefore, it would be desirable if there could be developed a practice, plus the necessary hardware, in which telephone cable terminus could be joined, one to another, so as to maintain the electrical continuity between shield members firmly bonded to an outer plastic jacket. As pointed out above, it has been the prior art practice to require that a shield member be stripable from any plastic jacket inside of which it was nested. This stripable feature, the prior art declared, was necessary in order to make adequate mechanical and electrical contact with the shield during attachment of bonding harness from one cable reel terminus to another.

Recently, there has been disclosure certain solderless ground wire connectors for telephonic cable shielding jackets, designed to make electrical and mechanical contact with a shield, laminated on one side with a plastic. These connectors are made up of three distinct parts plus a connector means, the connectors means being a conventional nut and bolt arrangement. Anytime a nut and bolt arrangement is used to form the compressive force to make mechanical and electrical contact with plastic-coated shield members of telephone cable, there is a tendency for such a structure to have variations in electrical properties, namely connection resistance that is directly attributable to the nut and bolt arrangement. When a connection is made, using the nut-bolt arrangement, there is always a variation in tightness applied. Furthermore, a nut and bolt arrangement has the property of losing its original tightness, over a period of time; thus resulting in some visible mechanical deterioration as well as significant electrical contact resistance.

BRIEF DESCRIPTION OF THE DRAWINGS

FIG. 1 is a cross-sectional view of a metal shield fuse bonded to a plastic jacket forming a part of an electrical and mechanical joint made according to the instant invention; and,

FIG. 2 is a graph showing a plot of contact resistance against number of temperature cycles (−40° to +140° F.) data, for two types of joints: one made according to the instant invention and one made using a nut-and-bolt type connector means.

DESCRIPTION OF A PREFERRED EMBODIMENT

Shown in FIG. 1 is a metal shield coated on one side with a graph polymer of polyethylene and a monomer with reactive carboxyl group, such as acrylic acid or acrylic acid ester. This graph polymer is termed as a "fuse bond." It is this layer of plastic that is bonded to the metal shield as well as to the plastic jacket. It will be remembered that this fuse bond is normally achieved during the extrusion step of the manufacturing process of the cable.

The composite laminate made up of the plastic jacket, fuse bond and metal shield, is tightly gripped and in electrical contact with the clip bond combination, which is made up of a piece of metal, U-shaped in cross section, connector means **2** and annulus fitting **3**. The U-shaped piece of metal is composed of three portions, namely a median portion connected to two terminal portions indicated by reference character **1**. The terminal portions contain spaced-apart perforations **8** defining inwardly extending plastic and metal piercing protuberances **6**. These two terminal portions face oppositely one from another and form the "legs" of the aforementioned U-shaped configuration. Protuberances **6** pierce not only the metal shield but also the fuse bond and plastic jacket laminate as shown.

Each terminal portion has an aperture in it that is not only aligned with that aperture in the opposing terminal portion but also with an aperture in the plastic jacket fuse bond metal shield laminate. Within these three apertures, connector means **2** is disposed. Connector **2** is made up of a median (shank) portion and two terminal portions. One of these terminal portions has a dimension that is larger than the apertures in the metal clip terminal portions. The other terminal portion of connector means **2** has nonconnecting annular grooves disposed therein. One end of jack **5**, which is a piece of metal with a hole in it, is connected to the grounding harness and is disposed around the connector means **2** to form the electrical connection between that shield shown in FIG. **1** and another shield which is connected to the other end of the grounding harness (not shown).

An annuluslike fitting 3, which prior to being affixed to connector means 2 possessed no inwardly protruding protrusions like that shown at 4, is slipped over that terminus portion of connector means 2 where the unconnected grooves are located. By means of a special tool, not shown, compression is applied to the thus assembled joint, more specifically connector usually aluminum, out of which annulus fitting 3 is formed.

As a result of this compression, metal is caused to flow into those unconnecting grooves disposed in one terminal portion of connector means 2. The compression rendered by this special tool is a function of that compression energy that is required to make the metal of annulus fitting 3 cold flow into those grooves previously described. If, by chance, insufficient compression energy were applied, using the special tool previously mentioned and not shown, there would be no cold flow of the metal of fitting 3. Thus, there would be no connection between annulus fitting 3 and connector member 2. Therefore, by using the special tool in this particular combination, there is absolute assurance that a predetermined amount of compressive force will be exerted on connector 5 U-shaped metal clip 1 and 7, the plastic jacket, fuse bond and metal shield laminate, if there is adherence of annulus 3 to connection member 2. If there has been insufficient compressive force rendered to annulus 3 and connection member 2 by the tool, then there will be insufficient protuberances 4 and thus no connection.

At first blush, it might seem that a nut and bolt arrangement, used as a connector means, would be roughly equivalent to that connector means envisioned by the instant invention, namely Elements 2, 3 and 4 of FIG. 1. If such an equivalency were in fact true, then one would anticipate that not only the mechanical but the electrical characteristics exhibited by that joint shown in FIG. 1 would be the same, whether or not connector means shown in the combination of Elements 2, 3 and 4 were employed or a nut and bolt arrangement were substituted for these elements. Experimentation and data taken from such experimentation has proven this not to be the case, namely that the connector means combination of Elements 2, 3 and 4 is not an electrical equivalent, from the standpoint of contact resistance, of a nut and bolt arrangement.

FIG. 2 is a graph showing a plot of connection resistance data against a given number of temperature cycles (−40° to 140° F.) for two types of joints, namely one having the same configuration as shown in FIG. 1 ("⊙" data plot) and another having the same configuration in FIG. 1 except that Elements 2, 3 and 4 were replaced by a nut and bolt arrangement ("X" data plot). Contact resistance in ohms was measured for both joint types and ploted against the number of cycles these joints were subjected, using a temperature cycle of −40° to +140° F. As will be seen by FIG. 2, the initial contact resistance of a joint, made according to the instant invention, was lower than that made using another joint using a nut and bolt arrangement. Over the 100 temperature cycles shown in FIG. 2, the joint made according to the instant invention maintained and increased that contact resistance differential between itself and a joint using a nut and bolt arrangement. Observing the type "X" data plots, which form the uppermost curve and characterizes the contact resistance of the nut and bolt type connector joint, it is readily seen that in comparison to that joint made according to the instant invention, the connection resistance of the nut-and-bolt-type joint connector increased significantly over a period of 100 temperature cycles.

Inasmuch as the connection resistance of connectors joining bonding harnesses to respective shields of cable terminuses is highly important, it is immediately obvious that the joint formed according to the instant invention gives an unexpected result. Because of this characteristic, it is far more proficient in maintaining electrical continuity from one cable segment shield to another. The results shown by FIG. 2 are not only surprising in the sense that one would expect the electrical characteristics of the nut and bolt arrangement to be essentially the same as that arrangement envisioned by the instant invention, but also in the sense that a nut and bolt arrangement would appear to exert essentially the same compression as that exerted by connector means made from Elements 2, 3 and 4. Notwithstanding this fact, after 100 temperature cycles between −40 to 140° F., it was physically noticeable that the mechanically compression exerted by the nut and bolt arrangement was significantly less than it was at the beginning of the temperature cycles, whereas the compression exerted by that arrangement envisioned by the instant invention was essentially unchanged. Furthermore, field trials in the state of Montana have shown that vibrations caused by normal highway traffic tend to loosen a nut and bolt arrangement. Inasmuch as the grooves of Element 4 are unconnected, the connector means of the instant invention is unaffected by vibration.

In summary, it can be readily seen that the instant invention sets forth a simple but yet effective means of establishing not only a mechanical but an electrical contact with a cable shield member. Furthermore, this contact, both electrical and mechanical, can be made with a shield coated and/or laminated to a piece of plastic. This mechanical and electrical contact is one that will withstand not only vibrations that tend to loosen a nut and bolt arrangement, but also many severe temperature cycles. Additionally the joint will maintain an extremely desirable level of mechanical compressive force and at the same time exhibit an electrical contact resistance that is not only much lower in value than one would expect using other conventional connector means but also more constant in value over a period of time. The presently disclosed connector means employs the use of metal cold flow and therefore demands that a given amount of compressive force be exerted before a connection can be made. Such a feature insures that the compressive force under which the joint is subjected is sufficient to achieve desired electrical and mechanical properties.

I claim:

1. In an electrical cable assembly, an electrical cable segment having a metallic shield, a jacket of insulating material covering said shield and a layer of plastic disposed between said jacket and said shield and being bonded to said shield and jacket, and a connector establishing electrical contact with said shield and comprising a metallic member having spaced apart sections, portions of said shield, said jacket and said layer being disposed between said sections, with one of said sections electrically contacting the side of said shield opposite from said layer, said sections having protuberances extending into the space between said sections and piercing said portions of said shield, said jacket and said layer, a fastening member extending through aligned apertures in said sections and said portions of said shield, said jacket and said layer, said fastening member having a pair of terminal portions disposed at opposite sides of said sections, one of said terminal portions having a plurality of unconnected grooves formed in the periphery thereof, said grooves at least partially circumscribing said one of said terminal portions, and a sleevelike fitting receiving said one of said terminal portions and having inwardly extending protuberances mechanically engaging and substantially filling said grooves, and electrically conductive means confined between one end of said fitting and an opposing surface of said metallic member and being retained in electrical contact with said metallic member by said fitting.

2. The electrical cable assembly defined in claim 1, wherein said metallic member has a U-shaped configuration in cross section, with the legs of said U-shaped configuration forming said spaced apart sections of said metallic member.

3. The electrical cable assembly defined in claim 1, wherein said fitting is a metallic sleeve that is crimped on said one terminal portion of said fastening member.

* * * * *