Dec. 22, 1964 R. HEPP 3,162,434

PROCESS AND APPARATUS FOR COLLATING SHEETS

Filed May 31, 1962 2 Sheets-Sheet 1

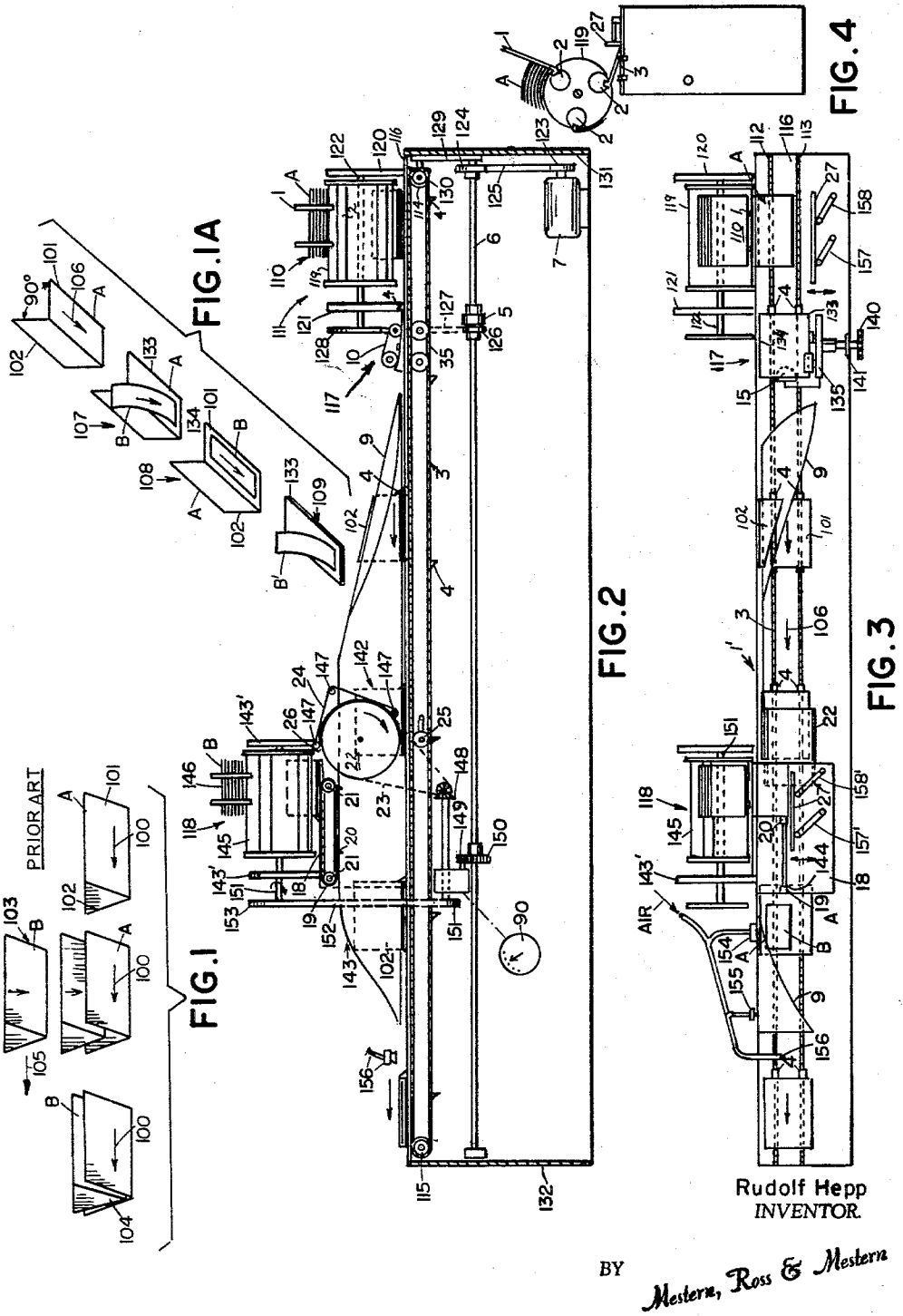

FIG. 1A

FIG. 1

PRIOR ART

FIG. 2

FIG. 3

FIG. 4

Rudolf Hepp
INVENTOR.

BY Mestern, Ross & Mestern

Dec. 22, 1964 R. HEPP 3,162,434

PROCESS AND APPARATUS FOR COLLATING SHEETS

Filed May 31, 1962 2 Sheets-Sheet 2

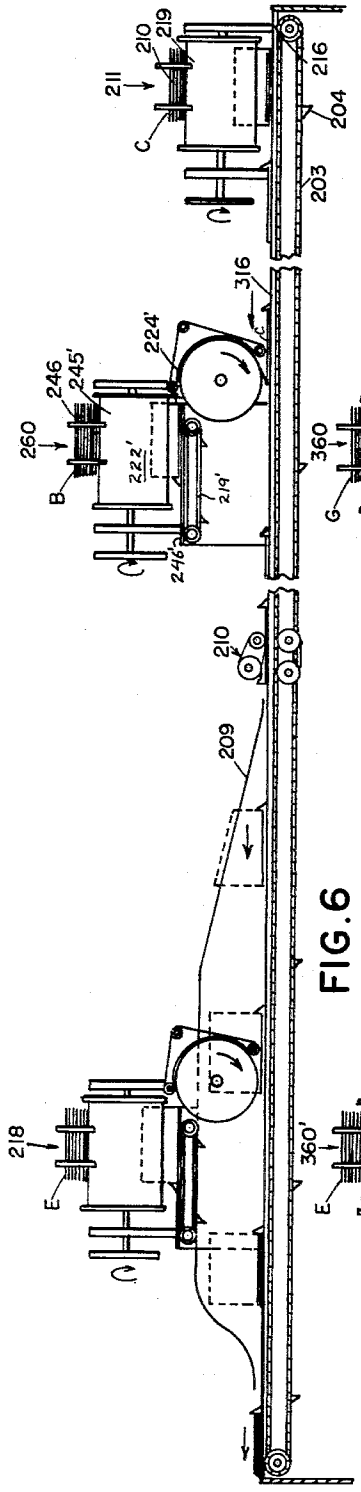

FIG. 6

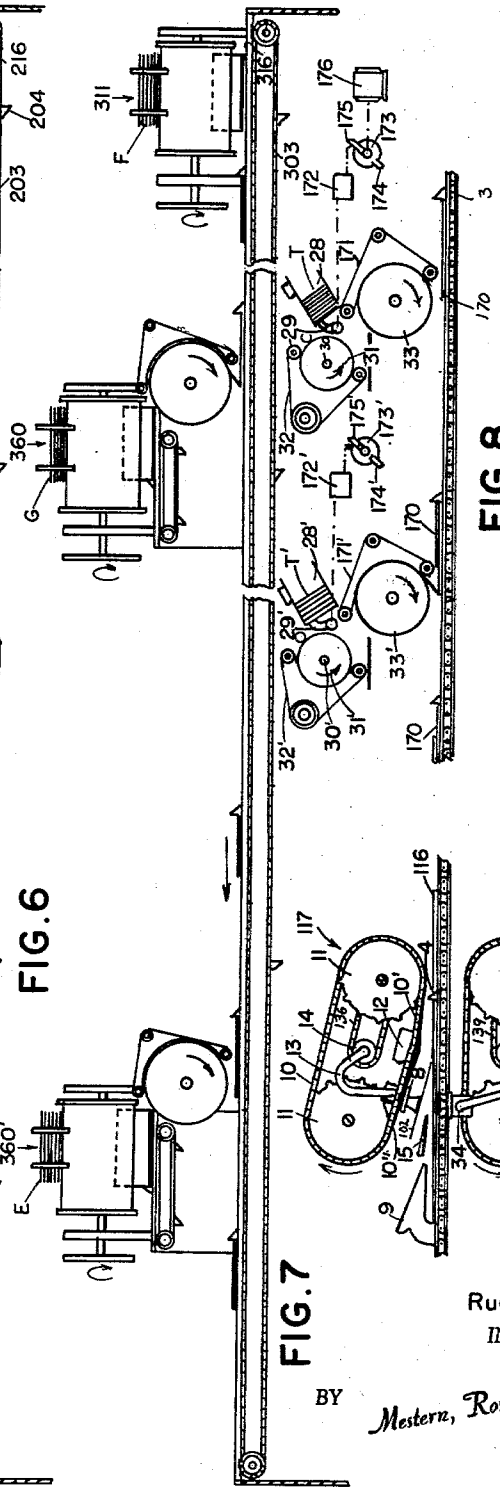

FIG. 8

FIG. 7

FIG. 5

Rudolf Hepp
INVENTOR.

BY Mestern, Ross & Mestern

United States Patent Office 3,162,434
Patented Dec. 22, 1964

3,162,434

PROCESS AND APPARATUS FOR COLLATING SHEETS

Rudolf Hepp, Schmidt-Ott-Strasse 7a, Berlin-Steglitz, Germany

Filed May 31, 1962, Ser. No. 198,878
Claims priority, application Germany, June 1, 1961, H 42,754
9 Claims. (Cl. 270—57)

My present invention relates to a process and apparatus for the collating of flexible sheet material and, more particularly, for the stacking of printed sheets and the interposition of inserts within folded sheets.

In known apparatus of this type inserts are interposed between flaps of folded sheet material (e.g. newspapers, books, magazines and the like) by passing the folded sheet, which is held with its vertex downwardly and its spread flaps open upwardly in a generally V-shaped configuration, while the insert is dropped between the flaps. In one type of device the partially spread folded sheet is displaced continuously while the insert is moved toward and along with the sheet into place between its flaps, thus necessitating a complicated feeding and/or timing mechanism to insure that the insert will be properly positioned within the spread flaps. Another apparatus of this kind displaces the folded sheet intermittently while the inserts are dropped between the flaps only during pauses in the forward motion. The latter arrangement greatly reduces the rate at which such machine can operate.

It is an object of the present invention to provide a method of inserting sheets between the flaps of a folded sheet continuously and at a rate substantially exceeding that of the hitherto existing devices of this character.

A further object of the invention is to provide an apparatus adapted to obviate the abovementioned disadvantages of the known systems while permitting the precise positioning of inserts between the flaps of a folded sheet.

Another object of the invention is to provide a simple and improved method for stacking and collating sheet material.

These objects have been achieved, according to the invention by a method wherein a folded sheet is continuously displaced past an inserting station at which its flaps are spread to an angle of at least substantially 90° and an insert, moving at the same velocity as the folded sheet and in the same direction, is deposited on one of its flaps. Advantageously, the process may be carried out with the aid of a rapidly moving continuous conveyor upon which one flap of the folded sheet lies substantially horizontally while the other flap is opened to a vertical position. Operating at the same speed as the conveyor and juxtaposed therewith, is a feeding device which deposits one or more inserts upon the horizontal flap of the previously unfolded sheet. The feeding device may, according to a particular feature of the invention, comprise a roller rotating about a substantially horizontal axis transverse to the direction of displacement of the conveyor with a peripheral speed equal to that of the conveyor so that the insert is invariably disposed in a predetermined position between the flaps of the folded sheet.

A further feature of the invention resides in the provision of means, synchronized with the conveyor belt for depositing the folded sheets thereon and opening them so that their flaps lie respectively in the substantially horizontal and vertical positions previously mentioned. It should be noted that it is not necessary that one of the flaps be precisely vertical but only that the two flaps include an angle greater than about 90° so as to permit deposition of the insert on the horizontal flap without

interference by the opened flap, i.e. the flap not in the horizontal position. The unfolding means may, advantageously, comprise a suction device, adapted to draw apart the corners of the folded sheet, operating in conjunction with guide means for holding the spread flaps apart during the travel of the folded sheet past the inserting station. The suction means preferably comprises a pair of suction devices juxtaposed on opposite sides of the sheet and displaceable concurrently with the conveyor so that the travel of the sheet is not impeded.

At the inserting station I provide insert-supply means, which also operates synchronously with the conveyor belt, for feeding the insert sheets to the drum at a rate equal to the rate at which folded sheets pass the latter. The conveyor may be provided with abutments at spaced locations therealong for positive entrainment of the folded sheets and the inserts disposed therein. The abutments preferably project above the conveying table to a height in excess of the height of the stacked sheets to be disposed on the table. Thus, a plurality of inserting and/or stacking stations may be provided along the length of the conveyor to deposit substantially any number of sheets thereon. At each stacking station I provide a similar drum rotatable about a horizontal axis transverse to the direction of displacement of the conveyor and parallel to the sheets for depositing, at the speed of the conveyor, sheets on top of the folded sheet carried thereon. At the stacking stations the spreading means may be dispensed with if it is desired merely to place a second sheet, which may or may not be folded, on top of the earlier deposited folded or nonfolded sheet. At the outgoing end of each of the inserting stations disposed along the conveyor I provide means for guiding the open flap back into place overlying the newly introduced insert.

While the collating and stacking drums may be provided with suction devices for entraining the sheets to be deposited on the sheets previously placed upon the conveyor, I prefer to employ holding means having a surface extending over an arc of the periphery of the drum and hugging the latter so that the sheets fed to the drum are pressed against it by the surface. This surface may advantageously, be formed by a moving band operating at the peripheral speed of the drum so as to effect a clamping of each sheet between the band and the drum periphery. Since it may be desirable to feed a plurality of stacked inserts to each drum at any station, I prefer to employ a conveyor belt whose surface extends generally parallel to the axis of the drum and to provide it with abutments of the character previously described for entraining a stack of inserts and feeding it between the drum and the band surface peripherally hugging the latter. A further drum, which may be rotatable about an axis parallel to the surface of the feeding conveyor but transverse to the axis of the collating drum, may be disposed above the feeding conveyor to successively deposit sheets thereon to form the stack.

A further feature of the instant invention resides in the provision of adjusting means along the conveyor to facilitate the accommodation of the latter to sheets of substantially any size so that a single installation may serve for collating of any papers, magazines and books without requiring major structural changes to accommodate the different sheet widths characterizing them. Since it is frequently desirable to position an insert accurately within a folded sheet and/or to dispose a superimposed sheet upon an underlying sheet, I provide means for synchronizing the motion of the conveyor belt and the drums so as to permit the latter to selectively deposit the sheets entrained thereby upon the conveyor at substantially any position relative to the sheets carried thereby. Thus I provide means for varying the posi-

tion of an insert or insert package relative to the forward or rearward edges of a folded sheet within which the insert is to be deposed. Advantageously, I employ a variable-clutch arrangement which is periodically actuated to deposit inserts shorter than the folded sheet alternately adjacent the forward and rearward edges thereof so as to insure that the resulting booklet or stack has a substantially uniform thickness. The various stations along the conveyor may be provided with interchangeable components adapted to accommodate sheets of various widths.

The above and other objects, features and advantages of the present invention will be more readily apparent from the following description, reference being made to the accompanying drawing in which:

FIG. 1 is a schematic illustration of a prior-art method of collating folded sheets;

FIG. 1A is a diagrammatic illustration showing the steps of collating and inserting sheets according to the present invention;

FIG. 2 is a side-elevational view of an apparatus for interposing inserts between the flaps of a folded sheet according to the invention;

FIG. 3 is a plan view of the apparatus of FIG. 2;

FIG. 4 is an end view of the apparatus showing a detail thereof;

FIG. 5 is a side-elevational view of sheet-unfolding means employed in the apparatus;

FIGS. 6 and 7 are views similar to FIG. 2 showing collating installations according to further embodiments of the invention; and

FIG. 8 is a side-elevational view, parts broken away, of a sheet-depositing station suitable for use in any of the installations shown in FIGS. 2, 6 and 7.

In FIG. 1 of the drawing I show the conventional method of introducing inserts into a folded sheet. According to this method, a folded sheet A is displaced either continuously or intermittently in the direction of arrow **100** with its flaps **101**, **102** slightly spread in a V-shaped configuration. As the folded sheet A passes the inserting station **103** an insert B is placed edgewise between the slightly spread flaps **101**, **102** of the upwardly open sheet A whence the latter continues in the direction **100** and now is part of a booklet **104**.

In contradistinction to these hitherto known methods, the folded sheet A is, according to the method of my present invention, spread so that its flaps **101**, **102** include a minimum angle of 90°, with one of the flaps lying in a substantially horizontal position, while being continuously displaced in the direction of arrow **106**. At an insertion station **107** an insert B, extending substantially parallel to and moving at the rate of displacement of sheet A, is deposited thereon so that the latter, continuing its displacement, reaches a position **108** wherein its flaps may be closed or further sheets disposed therebetween. If the flaps are closed, the resulting stack may move continuously to a further station **109** wherein another sheet B', also moving with the speed of sheet A, may be superimposed thereon. The method according to the invention may be continued to form a stack of any size with or without interposition of inserts between the flaps of folded sheets. This will be more readily apparent from the description below of various types of apparatuses for carrying out the method.

For example, in FIGS. 2–5 of the drawing, I show a stack **110** of folded sheets A received between the uprights **1** of a feeding station **111** disposed at one end of a continuous conveyor **3**. The latter may be formed as a pair of transversely spaced parallel chains **112**, **113** which pass over a drive roller **114** and an idler roller **115** to displace the sheets. At spaced locations therealong, the chains **112**, **113** are provided with abutments **4** which project above the plane of a substantially horizontal table **116** upon which the sheets rest.

Along table **116** I provide, in addition to the feeding station **111**, an unfolding station **117** (best shown in FIG. 5) at which the folded sheet A is spread to receive an insert and an inserting station **118** at which the insert is placed between the flaps of the unfolded sheet. Referring now to FIGS. 2–4 it may be seen that the uprights **1** form a supply magazine at feeding station **111** for a feed drum **119** which is journaled between a pair of supports **120**, **121** for rotation about a substantially horizontal axis parallel to the direction of displacement of the sheets along the conveyor **3** (arrow **106**). Drum **119** carries a plurality of conventional suction rollers **2** which, as drum **119** rotates counterclockwise as seen in FIG. 4, grip the folded sheets A of stack **110** substantially at the fold line and swing them onto the table **116** where they rest until engaged by the abutments **4** of chains **112**, **113**. The suction in rollers **2** is cut off just as the sheet A is deposited upon the table. In order to hold the sheet against the periphery of drum **119** the latter may be provided with perforations and connected to a source of reduced pressure so that each sheet A is held lightly thereagainst but is able to fall from the drum under the action of gravity as the drum begins its upward motion. Drum **119** is rotated on its shaft **122** by the motor **7** whose pulley **123** drives a power-take-off shaft **6** via a driven pulley **124** and a belt **125**. Between the shaft **122** and the power-take-off shaft **6** I introduce a variable-speed transmission or clutch **5** (e.g. a friction or jaw clutch) which is coupled to the shaft **122** of drum **119** via a pulley **126**, a belt **127** and a further pulley **128**. Chains **112** and **113** are also driven by motor **7** via a belt **129** which, from shaft **6**, rotates a bevel gear **130** journaled in an end wall **131** of the housing **132** supporting table **116**. This housing encloses the chains **112**, **113**, the transmissions for the several stations, and the power-take-off shaft **6**. Thus, feed drum **119** is driven synchronously with chains **112**, **113** but at a speed determined by clutch **5** so that, for example, with the drum **119** rotating at a high speed relative to the rate of displacement of chains **112**, **113**, a plurality of sheets may be deposited upon the table before each set of abutments **4** entrains the sheets along the table to the stations spaced therealong.

Forwardly of the feeding station **111** along table **116** I provide unfolding or spreading means for lifting the flap **112** of each sheet A into a substantially vertical position or a position wherein this flap includes with the horizontal flap **101**, resting on the table, an angle in excess of 90°. To this end the spreading means **117** shown in FIG. 5 comprises a pair of suction heads **8**, **34** displaceable along the table at the rate of the sheets A. In the spreading means shown, the upper head **8** is connected to a link of the chain **10** whose lower pass is closely juxtaposed with the upper flap **102** of the sheet. Chain **10**, disposed along the edge **133** of the sheets A opposite their folded edge **134**, passes over a pair of sprocket wheels **11** journaled for rotation in a bracket **135** about a horizontal axis transverse to the direction of displacement of conveyor **3**. Head **34** is carried by a further chain **35** which passes over a pair of sprocket wheels **36** disposed below table **116**, while the path of chain **35** along table **116** lies substantially parallel to this table. Chain **10** is provided with a guide **12** which holds this chain parallel to the table and thereabove only for a short length **10'** sufficient to permit suction head **8** to draw the upper flap **102** of a sheet thereagainst. The working path of chain **10** also includes an upwardly inclined portion **10''** in the course of which this upper flap is raised to clear an unfolding tongue **15** which is interposed between the flaps as the folded sheet is disposed along the table **116**. A flexible tube **13** couples the upper head **6** with a rotatable hollow suction conduit **14** which is rotated in step with the sprocket wheels **11** by a chain **136**. A similar suction tube **137** is joined with a rotatable conduit **138** of the lower head **34**. Conduit **138** is also rotated by sprocket **36** via a chain **139**. Forwardly along the guide path **1'** I provide a guide plate **9** which unfolds the upper flap **102**

outwardly as the sheet A is displaced along the table 116 and holds the sheet in the open position. Head 119 may be cantilevered at the inserting station 118. Drums 119, 145, 219, 245' are of the type disclosed in application Serial No. 828,476, filed July 21, 1959, now Patent No. 3,130,966.

To permit accommodation of folded sheets of various widths I provide an adjustable stop member 27 displaceable on table 116 transversely to the direction of displacement of the sheets therealong at the feeding station 110 to position the sheets A with respect to the chains 112, 113. Since it is advisable for at least the upper suction head 8 to be disposed as close to the edge 133 of each sheet A remote from its fold line 134, I provide a screw 140, rotatable in a pillow block 141, which threadedly engages the bracket 135 for shifting the latter and its chain 10 transversely to the direction of displacement (arrow 116) of sheets A.

As the sheets A pass along the table 116 toward the inserting station 118, guide 9 raises the upper flap 102 into a position wherein it includes an angle of at least 90° with its horizontal flap 101 as shown at 142 in FIG. 2. In this condition the sheet is displaced past an inserting drum 22 which deposits the stack of insert sheets B thereon. The inserting station comprises a supporting housing 143 in which is journaled a pair of rollers 21 of a gathering conveyor 19 whose abutments 20 extend upwardly through a groove 144 of a gathering table 18. Depending upon its speed of rotation, a drum 145, in all respects similar to drum 119 previously described, removes individual insert sheets B from a stack 146 thereof. The sheets are then deposited upon table 18 until an abutment 20 of chain 19 engages the resulting pack and displaces it into the gap 26 between the inserting drum 22 and a band 24 extending over a substantial portion of the periphery of this drum for holding the pack of inserts thereagainst. Band 24, which is displaceable at the peripheral speed of drum 22 along its supporting rollers 147, guides the insert pack in the direction of displacement of the sheets A for deposition upon their respective lower flaps 101. As previously noted, the inserting drum 22 is operated with a peripheral speed equal to the rate of displacement of chains 112, 113 so that the pack is dropped directly onto the folded sheet without relative motion. The drum 22 is driven by a chain 23 via a bevel gear transmission 148 from a variable-speed transmission or adjustable clutch 17. The latter is provided with an indicator disk 90 from which the transmission ratio or position of adjustment may be read. The input gear 149 of the clutch is rotated by a gear 150 on the power-take-off shaft 6. An output sprocket 151 of clutch 17 is coupled via a belt 152 to the driven sprocket 153 of drum 145 whose shaft 154 is journaled between the upper rights 143' of base 143. A spring-loaded roller 25 bears upon chain 23 to take up the slack of this chain and to prevent slowing down of drum 22. Roller 25 and a similar roller not shown may also be employed to support the chains 112, 113 of conveyor 3 at the point of insertion to insure proper deposition of the insert pack on the folded sheet. As the sheet A carrying its pack of inserts B passes out of the inserting station 118, the sheet-metal guide 9 permits the upper flap 102 thereof to fall back over its lower flap and the inserts carried thereon. Replacement of the upper flap is facilitated by a plurality of blowers 154, 155 spaced along the guide 9 to hold the flap 102 thereagainst. A further blower 156 is disposed above the table 116 forwardly of guide 9 to fully close the folded sheet which then may travel to further inserting and/or sheet-depositing stations as shown, for example, in FIGS. 6 and 7. So that the gathering table 18 of the inserting station 118 may accommodate inserts of various widths, this table is provided with a transversely shiftable stop 27', similar to the stop 27 previously described. Each of these stops 27, 27' is provided with a pair of links 157, 158, 157', 158' pivotally secured thereto and to the respective table 116, 18 to form a parallel-motion linkage whose contact surface always remains parallel to the longitudinal edge of the folded sheets A and the inserts B.

In FIG. 6 I show an arrangement generally similar to that previously disclosed wherein the feeding station 211 is disposed along the path of a conveyor 203. Forwardly of the feeding station 211 along this path I provide a depositing station 260 and an inserting station 218. Thus, folded or unfolded sheets C may be fed from a magazine by a drum 219 onto the table 216 whereupon the abutments 204 of the conveyor 203 entrain the several sheets piled on the table and carry them to the depositing station 216. The latter may deposit one or more folded sheets D from its stack 246 on its collecting plate 246' via a drum 245'. From plate 246' the stack of folded sheets D is fed between flexible band 224' and the depositing drum 222' by a conveyor 219'. The stack is then deposited upon the uppermost sheet C of a pile thereof passing therebelow. In all respects, the depositing station 260 is identical with the inserting station 118 previously described, but with the omission of the unfolding device 10 and guide 9 associated therewith inasmuch as the sheets deposited at station 260 are placed on top of the pile of sheets C.

Since the uppermost sheet of the pile leaving station 260 is folded in the manner of sheet A, an unfolding device 210 may be provided forwardly thereof along the table 216 to lift the upper flap of this topmost sheet whence a guide 209 maintains it at right angles to its lower flap as the pile passes through the inserting station 218. The latter is, of course, identical to the station 118 previously described and deposits a pack of inserts E between the flaps of the topmost sheet of the pile.

In FIG. 7 I show a somewhat modified arrangement wherein a pile of sheets F are deposited at a feeding station 311 upon the table 316 while a conveyor 303 entrans them therealong. A first depositing station 360 places a pack of sheets G upon the pile passing therethrough while still another depositing station 360' places a further stack of sheets H thereon. Stations 360 and 360' are, of course, similar to station 260 described above.

It will be readily apparent that substantially any succession of the several stations described may be provided along a conveyor as required. Thus, the collating installation may be capable of interposing one or more folded or nonfolded inserts between the folds of a sheet previously deposited upon the conveyor at a first inserting station 118 or 218 and, subsequently, disposing further insert packs between the folds at a successive station. Another package of sheets may then be superimposed upon the closed folded sheet containing the two sets of inserts at a further station (260, 360) while the topmost sheet of the resulting pile may, thereafter, be unfolded to permit the insertion of additional packs or similar sheets as desired. To employ the inserting apparatus for superimposition of sheets upon a folded or nonfolded sheet displaced along the conveyor, it is merely necessary to shut off the unfolding devices 10, 210 whereupon the sheets will remain folded as they pass through the station so that the packs are superimposed thereon rather than inserted between its folds. When the unfolding devices 10, 210 are cut off, the guides 9, 209 are rendered ineffective since the upper flap of a folded sheet is not lifted to engage the guide.

In FIG. 8 I show, somewhat schematically, an arrangement for periodically varying the position at which inserts shorter than the sheets traveling upon the conveyor 3 are deposited in order to produce a stack of substantially constant thickness. A magazine 28 contains a stack of sheets T adapted to be deposited upon piles 170 displaced therebelow by a conveyor 3 Without movement of the sheets in mutually perpendicular directions as in the previously described devices 218, 260,

the sheets are brought into engagement with a drum 31 by a swinging suction arm 29 of a conventional type. Drum 31 is partially embraced by a band 32 which is displaceable at the peripheral speed of this drum about its horizontal axis 30 transverse to the direction of displacement of the piles 170. Each sheet T is then drawn between the band 32 and the drum 31 into a position wherein it is engaged by a further drum 33 and a similar band 171 for deposition upon the piles 170 in the manner described previously with reference to drum 22 and band 24. The suction arm 29 is swung periodically by means of a clutch 172 coupling it with the power-takeoff shaft 6. Clutch 172 is periodically tripped by a rotating cam 173 having angularly adjustable camming members 174, 175. Thus, upon rotation of cam 173 by its motor 176 which is coupled with shaft 6 and is, therefore, synchronized therewith, the camming members 174, 175 operate the clutch 172 to feed successive sheets via drums 31 and 33 onto the piles 170. The camming members 174, 175 may be so positioned as to cause successive sheets to meet the leading and trailing edges of successive piles 170 as shown in FIG. 8. A similar arrangement for periodically operating the clutches 5, 17 may be provided if it is desired to vary alternately the position of the inserts. A second arrangement (primed reference numerals) identical to the one described is provided forwardly along the conveyor belt 3 so that each pile receiving an overlay sheet along its forward edge will subsequently receive another sheet along its rearward edge, and vice versa. Each of the arrangements shown can be preset by a suitable adjustment of the clutches 172, 172', with a consequent deactivation of the control members 173, 173', so that one of the inserting drums 33, 33' deposits a respective insert along the leading or trailing edge of a pile 170 while the other drum deposits its inserts along the other edge. Clutches 17 etc. may be similarly adjusted. Moreover, one of the arrangements shown in FIG. 8 can be employed together with the station 118 shown in FIG. 2 so that both may deposit their respective sheets between the folds of a sheet traveling upon the conveyor 3 or either one may operate in the absence of operation of the other. It is also possible to provide means for periodically shifting the entire assembly 18, 21, 22, 24 in a direction transverse to the direction of displacement of the sheets along the table 116 and parallel to the latter for alternately depositing inserts along the folded edge 134 and the remote edge 133 of each sheet.

The invention described and illustrated is, as noted above, believed to admit of many modifications and variations which will be readily apparent to persons skilled in the art, all such modifications and variations being deemed included within the spirit and scope of the invention as claimed.

I claim:

1. A method of collating sheets, comprising the steps of displacing a plurality of sheets folded along a line in a predetermined direction parallel to said line along a transport path, partially unfolding said sheets, and depositing a second sheet upon each of said first sheets by displacing said second sheet above said first sheet in said predetermined direction at the speed of said first sheets while dropping it thereon.

2. A method of collating sheets, comprising the steps of continuously displacing a plurality of sheets folded along a line in a predetermined direction parallel to said line along a transport path lying in a substantially horizontal plane, said sheets each having a lower flap and an upper flap overlying said lower flap, raising said upper flap to a position in which it includes with said lower flap an angle of at least substantially 90°, depositing a second sheet upon said lower flap of each of said first sheets by displacing said second sheet above said lower flap in said predetermined direction at a speed equal to the speed of displacement of said first sheets while dropping it upon said lower flap, and folding said upper flap of each of said first sheets over the second sheet disposed on its respective lower flap.

3. A method according to claim 2 wherein a stack of said second sheets is disposed upon said lower flap at said inserting station.

4. A method according to claim 3 wherein said stack is formed by piling a plurality of individual sheets prior to deposition of said stack upon said lower flap.

5. An installation for collating sheets, comprising substantially horizontal conveyor means for displacing a plurality of sheets along a continuous transport path, feed means for depositing a plurality of sheets folded along a line upon said conveyor means with the fold line of each of said sheets oriented in the direction of displacement of said conveyor means, spreading means along said conveyor means forwardly of said feed means for at least partly spreading the flaps of each of said sheets by lifting the uppermost flap, inserting means forwardly of said spreading means along said transport path, said inserting means including rotary-drum means journaled above said conveyor means for rotation about an axis parallel to said conveyor means but transverse to the direction of displacement of said conveyor means and operable with a peripheral speed equal to the speed of said conveyor means, said rotary-drum means having a surface approaching said conveyor means and moving in the direction of displacement thereof while being adapted to entrain an insert for disposing said insert between the flaps of a sheet passing therebelow, and means forwardly of said inserting means for closing said flaps, said spreading means comprising suction means disposed above said transport path, a support for said suction means moveable along said transport path at the rate of displacement of said sheets for raising a respective upper flap of at least some of said sheets while said sheets are continuously displaced therealong, and guide means forwardly of said suction means along said transport path for engaging the raised flaps of said sheets and retaining them in a raised condition wherein they include an angle in excess of 90° with a respective lower flap as said sheets pass said inserting means, said support means comprising a moving endless band carrying said suction means, deflector means for said band forming a pass thereof juxtaposed with said conveyor means diverging away from said band in the direction of displacement of said sheets, and transmission means coupling said conveyor means and said band for concurrent operation.

6. An installation according to claim 5 wherein said inserting means comprises a drum disposed above said conveyor means and rotatable about an axis transverse to the direction of displacement of said conveyor means and parallel to said sheets, and holding means cooperating with said drum for urging an insert thereagainst, further comprising common drive means for said conveyor means and said drum whereby said drum is rotated with a peripheral speed equal to the rate of displacement of said conveyor means.

7. An installation according to claim 6 wherein said holding means comprises a flexible band displaceable concurrently with said drum and hugging its periphery over a substantial portion thereof, said band and the periphery of said drum forming an inlet remote from said conveyor means and an outlet adjacent said conveying means, and stack-forming means adjacent said inlet for collecting a plurality of insert sheets and feeding them through said inlet between said drum and said band whereby said stack is deposited upon a spread sheet passing below said drum.

8. An installation according to claim 7 wherein said stack-forming means comprises a table, a conveyor positioned below said table and formed with abutments extening therethrough, said abutments being spaced apart by distances greater than the length of said insert sheets, and feed-drum means for stacking a plurality of said

insert sheets upon said table piror to entrainment by one of said abutments of the stack thus formed.

9. An installation according to claim 5, further comprising periodically adjustable transmission means interconnecting said conveyor means and said inserting means for opertaion in timed relationship alternately to deposit said inserts along a leading edge and a trailing edge of each of said sheets.

References Cited in the file of this patent

UNITED STATES PATENTS

2,021,360	Halvorsen	Nov. 19, 1935
2,279,269	Tornberg	Apr. 7, 1942
2,711,896	Kleineberg et al.	June 28, 1955
3,059,391	Volks et al.	Oct. 23, 1962