A. S. DENNIS.

TYPE WRITING MACHINE.

APPLICATION FILED JUNE 10, 1909.

964,220. Patented July 12, 1910.

Fig 1.

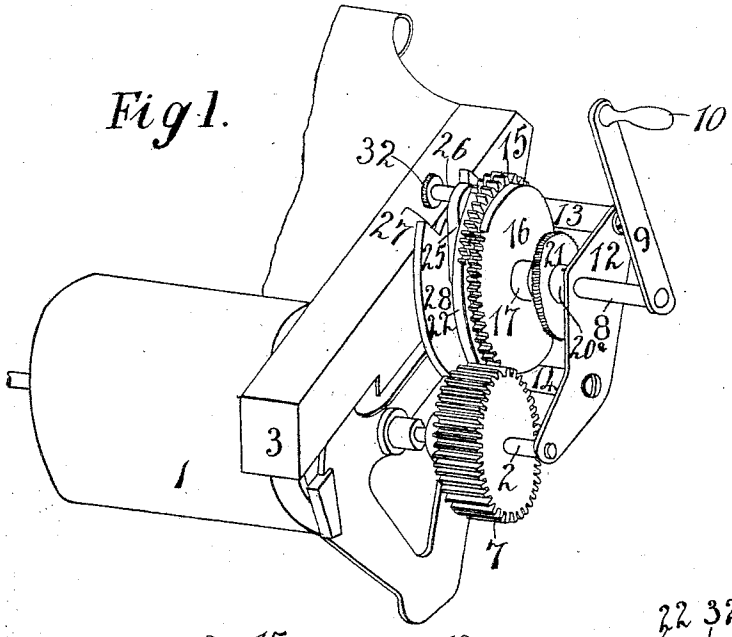

Fig 2.

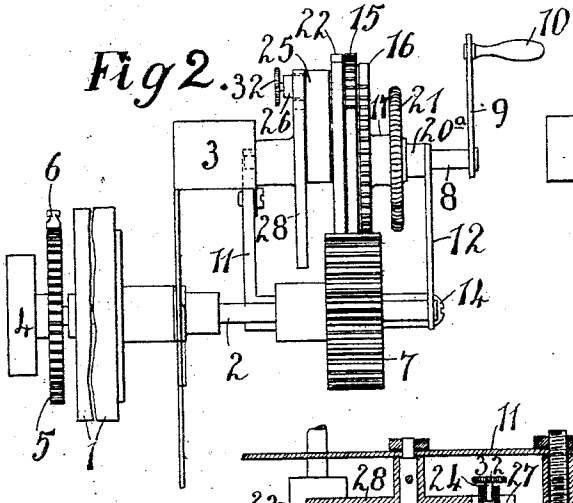

Fig 3.

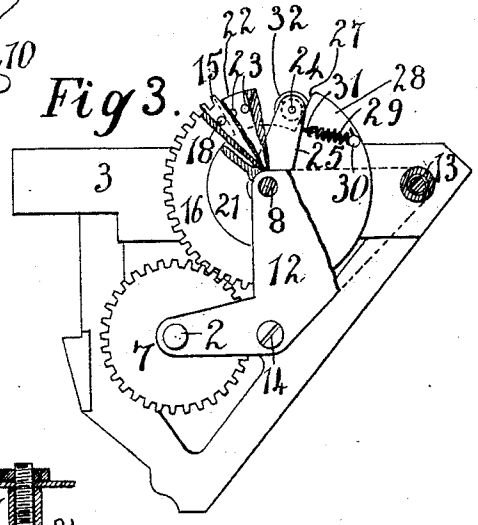

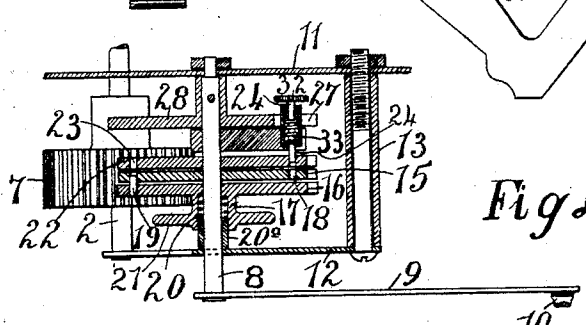

Fig 4.

Witnesses:
John O. Seifert,
Sigmund Schiff

Inventor:
Adolphus S. Dennis,
By B. C. Stickney,
Attorney

THE NORRIS PETERS CO., WASHINGTON, D. C.

UNITED STATES PATENT OFFICE.

ADOLPHUS S. DENNIS, OF LAKEWOOD, OHIO, ASSIGNOR TO UNDERWOOD TYPEWRITER COMPANY, OF NEW YORK, N. Y., A CORPORATION OF NEW JERSEY.

TYPE-WRITING MACHINE.

964,220. Specification of Letters Patent. **Patented July 12, 1910.**

Application filed June 10, 1909. Serial No. 501,277.

To all whom it may concern:

Be it known that I, ADOLPHUS S. DENNIS, a citizen of the United States, residing in Lakewood, in the county of Cuyahoga and State of Ohio, have invented certain new and useful Improvements in Type-Writing Machines, of which the following is a specification.

This invention relates to the platen-controlling devices of typewriting machines, and particularly to devices intended to rotate the platen first backwardly to receive a bill, and then forwardly to bring the first line on the bill to printing position, as in the operation known as condensed billing.

In my application No. 501,111, filed June 9, 1909, is disclosed a pinion upon the platen axle, and also a driving axle having a crank and carrying a mutilated gear, which is normally out of mesh with said pinion, but may be swung into mesh therewith, and may continue its movement in the same direction until it swings out of mesh with the pinion, whereby the length of the rotation of the platen depends upon the length of the mutilated gear. Said gear consists of a series of segments placed side by side and matching one another, to form a continuous gear; the pinion being of sufficient length to mesh with all of the segments. The segments moreover are relatively adjustable rotatively for the purpose of extending or shortening the continuous gear. The latter, when most extended, still falls short of forming a complete gear, and always remains mutilated or in the form of a grand segment. The three segments may be adjusted or folded together, so that only a very short stroke may be imparted thereby to the platen, or they may be extended or fanned out, so that more than an entire revolution may be imparted thereby to the platen; the diameter of the gear being preferably substantially in excess of that of the platen pinion. Provision is also disclosed in said application for causing the initial or backward stroke of the platen to be shorter than the final or forward stroke thereof. To this end one of the segments is permitted to have a limited vibration, relatively to another, and a spring effects such vibration in one direction. When therefore the driving gear is rotated, the yielding segment first engages the pinion, and the spring permits it to yield temporarily while the crank continues turning. Hence a short stroke is given to the platen. During such stroke the yielding segment escapes from the platen pinion, and the spring returns it to its normal position, relatively to the other segment; and hence upon the return stroke the platen is driven by the fully expanded continuous gear, and hence turns through a greater arc than at its first stroke.

One of the objects of the present invention is to provide simplified and improved means for connecting one of the adjustable segments with the main segment. To this end, I construct the adjustable segment so that it may be moved in axial direction away from the main segment to become released therefrom, and I also provide a spring to press the adjustable segment toward the main segment, to cause a pin provided upon one of the segments to lock into the rack provided upon the other. The adjustable segment has a finger piece whereby it may be pulled away from the main segment and then rotatably adjusted, as desired; the spring re-locking it to the main segment after the finger-piece is released.

Another object of the invention is to provide improved means for effecting adjustment of the yielding segment, relatively to the main segment. To this end, I provide a series of holes formed in a curved rack upon the main segment, and provision is made to adjust the yielding segment to any portion of said rack, the openings in the rack being at intervals corresponding with the usual line-spacing intervals of the platen. A loose arm, mounted to turn about the axis of the segments, is provided with a releasable pin to engage said rack, and a spring connects said arm to a part which is fixed to the main segment; said part also having an opening in which plays a wrist which is also provided on said arm. Thus the arm may be connected to the loose segment at any desired point, and in all cases the segment will yield when swung into engagement with the pinion, to an extent limited by the play of the wrist in said opening.

In the accompanying drawings, Figure 1 is a perspective view of the improvement applied to the platen frame of an Underwood typewriting machine. Fig. 2 is a plan

of the mechanism. Fig. 3 is an elevation showing the parts broken away. Fig. 4 is a sectional plan of the gearing.

The usual cylindrical platen 1 is provided with a shaft or axle 2, mounted in a platen frame 3 of the usual construction, and having at one or both ends knobs 4 for rotating the platen. A notched line-space wheel 5 may be secured to one end of the platen, and a spring detent 6 may coöperate therewith in the usual manner. Upon the platen axle outside of the platen frame is fixed a broad pinion 7, the teeth of which may have the same pitch as those of the line-space wheel 5.

A driving axle 8 having a crank 9 (provided with a handle 10) is journaled in an auxiliary frame comprising plates 11, 12, connected by studs 13, 14, said studs secured to the platen frame 3 in any suitable manner. Fixed upon the driving axle 8 is a gear segment 15, the length of the segment being preferably about 90°. At the outer side of said segment is a second similar segment 16, mounted loosely upon the axle 8 by means of a hub 17 and of the same size as the segment 15 and matching the same, so that the two segments taken together may form a continuous gear segment of about 180 or 200 degrees. In the segment 15 is formed a rack consisting preferably of a circular series of holes 18, in any of which may fit a pin 19, carried by the segment 16 and held in engagement with the hole by a spring 20.

Upon the hub 17 is formed a button or finger-piece 21, whereby the segment 16 may be withdrawn axially or moved outwardly upon the shaft 8, to withdraw the pin 19 from the rack 18. While the segment 16 is released, it may be rotated by the button 21, and the pin 19, fixed in said segment, may be inserted in any of the other holes in the rack 18. The spring 20 is coiled about the driving shaft 8, and presses at one end against the segment 16, to hold the same locked to the main segment 15; the other end of said spring bearing against a washer 20^a provided on the shaft 8 and fitting loosely in the hub 17. The holes formed in the rack 18 may be disposed at angular intervals, to correspond with the teeth or notches of the line-space wheel 5. On the opposite or inner side of the rigid main segment is a third segment 22, matching the other two segments and loose upon the driving shaft 8. In this segment 22 is a circular series of holes forming a rack 23 corresponding to the rack 18. A pin 24 carried upon an arm 25 may lock in any of the holes of the rack 23. The arm 25 is loose upon the shaft 8, and may be turned to any desired position with relation to the segment 22.

The arm 25, together with the segment 22, locked thereto, is capable of vibration relatively to the main segment 15 to an extent determined by the play of a wrist 26 on said arm, in an opening 27 provided in a disk 28, which is fixed on the drive shaft 8. A spring 29 moves the arm 25, together with the segment 22, in one direction. Said spring is connected at one end to a pin 30 on the disk 28, and at the other end to a hook 31 on the arm 25. The spring tends to keep the gear expanded to its fullest extent.

When it is desired to rotate the platen backwardly to receive a new bill, the handle 10 is grasped and turned toward the right, or in the same direction as the hands of a clock, and the point of the loose segment 22 is brought into engagement with the pinion 7. The crank 9 continues in rotation, but said pinion 22 remains stationary, owing to the yielding of the spring 29, until the wrist 26 engages the other end of the opening 27. Upon continued rotation of the crank in the same direction all three of the segments move together as if made in one piece, and the platen is consequently rotated. At a subsequent portion of the same stroke of the crank 9, the loose pinion 22 escapes from the platen pinion 7, and the spring 29 restores the loose segment 22 to its original position, relatively to the main segment 15, thus restoring the grand segment to its expanded condition. The stroke of the crank 9 continues preferably until the continuous gear escapes entirely from the pinion 7; the extent of rotation of the platen therefore depending upon the length of the continuous gear. The bill is then inserted in the machine in the usual manner and the crank 9 is then rotated reversely to bring the segments 15, 16 and 22 successively into mesh with the pinion 7. During this stroke, there is no yielding or relative movement of the loose pinion 22, so that the continuous gear is effective for its full or expanded length, and hence the pinion 7 and the platen are given a forward rotation in excess of the backward rotation, just described. By this means a record sheet, which remains in the machine, is brought to position to receive the first line of writing on the second bill, a space or gap intervening between said first line and the last line of the preceding bill. If the swing of the platen is too long, the button 21 may be grasped and pulled to the right at Fig. 1, to release the segment 16 from the main segment 15, and the segment 16 may then be turned to the right to shorten the grand segment. Then the button 21 is released, and the spring 20 locks the segment 16 to the segment 15. If still further shortening is desired, this operation may be repeated, until all the teeth of the two segments 15 and 16 coincide. If still further shortening is desired, a button 32 on pin 24 is pulled to withdraw said pin from the rack 23. Then the segment 22 may be rotated to the left as far as desired, and

the button 32 released, whereupon a spring 33 housed within the wrist 26 forces said pin into one of the holes in the rack 23, thus locking together the arm 25, segment 22 and the segment 15; the locking pin 24 having a bearing partly in said arm 25 and partly in said wrist 26, being disposed axially to the latter. Since the wrist 26 and the segment 22 are relatively adjustable, the spring 29 is enabled to control the segment 22 at any position to which the latter may be adjusted; so that in all cases the segment 22 may yield to a limited extent when swung into engagement with the pinion 7, and after swinging out of engagement therewith may be turned by the spring 29 to its normal position relatively to the main segment 15.

Having thus described my invention, I claim:

1. In a typewriting machine, the combination with a platen having a pinion, of a driving gear segment, a second driving gear segment by the side of the first and revolubly adjustable relatively thereto, both segments movable into mesh with said pinion and cooperative to form a continuous gear, and by reason of their relative adjustability determining the stroke imparted through said pinion to the platen, a rack upon one of said segments, and a detent fixed upon the other of said segments to engage said rack to hold the segments together in different relative positions; one of said segments movable in axial direction away from the other to release the detent from the rack.

2. In a typewriting machine, the combination with a platen having a pinion, of a driving gear segment, a second driving gear segment by the side of the first and revolubly adjustable relatively thereto, both segments movable into mesh with said pinion and coöperative to form a continuous gear, and by reason of their relative adjustability determining the stroke imparted through said pinion to the platen, a rack upon one of said segments, a detent fixed upon the other of said segments to engage said rack to hold the segments together in different relative positions; one of said segments movable in axial direction away from the other to release the detent from the rack, and a spring to press said segments together to retain the detent in the rack.

3. In a typewriting machine, the combination with a platen having a pinion, of a driving gear segment, a second driving gear segment by the side of the first and revolubly adjustable relatively thereto, both segments movable into mesh with said pinion and cooperative to form a continuous gear, and by reason of their relative adjustability determining the stroke imparted through said pinion to the platen, a rack upon one of said segments, a detent fixed upon the other of said segments to engage said rack to hold the segments together in different relative positions; one of said segments movable in axial direction away from the other to release the detent from the rack, and a spring to press said segments together to retain the detent in the rack; said axially movable segment provided with a button for releasing and turning the same.

4. In a typewriting machine, the combination with a platen having a pinion, of a driving gear segment, a second driving gear segment by the side of the first, both segments movable into mesh with said pinion and coöperative to form a continuous gear, one of said segments fixed upon a shaft which is provided with a crank, and the other of said segments loose upon said shaft, a spring to press the loose segment toward the fixed segment, and interlocking means upon said segments rendered effective by said spring, the loose segment being movable axially to release it from the fixed segment, and being rotatively adjustable with reference to the fixed segment.

5. In a typewriting machine, the combination with a platen having a pinion, of a driving gear segment, a second driving gear segment by the side of the first, both segments movable into mesh with said pinion and coöperative to form a continuous gear, one of said segments fixed upon a shaft which is provided with a crank, and the other of said segments loose upon said shaft, a spring to press the loose segment toward the fixed segment, and interlocking means upon said segments rendered effective by said spring, the loose segment being movable axially to release it from the fixed segment, and being rotatively adjustable with reference to the fixed segment; said continuous gear mounted to swing out of mesh with said pinion at the conclusion of each of its forward and backward platen-driving strokes.

6. In a typewriting machine, the combination with a platen having a pinion, of a driving-gear segment, second and third driving-gear segments by the side of the first and each revolubly adjustable relatively thereto and to each other, the three segments movable into mesh with said pinion and cooperative to form a continuous gear, and by reason of their relative adjustability determining the stroke imparted through said pinion to the platen; one of said segments movable axially to release it from the adjacent segment and permit relative rotative adjustment.

7. In a typewriting machine, the combination with a platen having a pinion, of a segment, a second segment by the side of the first and movable relatively thereto, means limiting such relative movement, a spring to effect such relative movement in one direc-

tion; both segments movable into mesh with said pinion and coöperative to form a continuous driving gear, the spring permitting one segment to yield to a limited extent when said segment is swung into engagement with said pinion, to cause the movement of the pinion thereupon effected by the gear to be shorter than the reverse movement of the pinion effected by said gear, and means inclusive of a rack being provided between said segments to permit their relative adjustment, said rack having openings at line-space intervals.

8. In a typewriting machine, the combination with a platen having a pinion, of a segment, a second segment by the side of the first and movable relatively thereto, means limiting such relative movement, a spring to effect such relative movement in one direction; both segments movable into mesh with said pinion and coöperative to form a continuous driving gear, the spring permitting one segment to yield to a limited extent when said segment is swung into engagement with said pinion, to cause the movement of the pinion thereupon effected by the gear to be shorter than the reverse movement of the pinion effected by said gear, and means inclusive of a rack being provided between said segments to permit their relative adjustment, said rack having openings at line-space intervals; said continuous gear mounted to swing at each stroke into and out of mesh with said pinion.

9. In a typewriting machine, the combination with a platen having a pinion, of a segment, a second segment by the side of the first and movable relatively thereto, means limiting such relative movement, and a spring to effect such relative movement in one direction; both segments movable into mesh with said pinion and coöperative to form a continuous driving gear, the spring permitting one segment to yield to a limited extent when said segment is swung into engagement with said pinion, to cause the movement of the pinion thereupon effected by the gear to be shorter than the reverse movement of the pinion effected by said gear; one of said segments fixed upon an axle and the other of said segments rotatively adjustable relatively to the first to determine the length of the stroke imparted through said pinion to the platen, and a series of openings at letter-space intervals forming a circular rack being provided upon one of said segments to coöperate with a detent connected to the other of said segments to hold the adjustable segment in the desired relation to the fixed segment.

10. In a typewriting machine, the combination with a platen having a pinion, of a segment, a second segment by the side of the first and movable relatively thereto, means limiting such relative movement, and a spring to effect such relative movement in one direction; both segments movable into mesh with said pinion and coöperative to form a continuous driving gear, the spring permitting one segment to yield to a limited extent when said segment is swung into engagement with said pinion, to cause the movement of the pinion thereupon effected by the gear to be shorter than the reverse movement of the pinion effected by said gear; one of said segments having an adjustable wrist to which said spring is attached, and the other segment having a part provided with an opening to receive said wrist to permit the limited relative movement of the segments.

11. In a typewriting machine, the combination with a platen having a pinion, of a segment, a second segment by the side of the first and movable relatively thereto, means limiting such relative movement, and a spring to effect such relative movement in one direction; both segments movable into mesh with said pinion and coöperative to form a continuous driving gear, the spring permitting one segment to yield to a limited extent when said segment is swung into engagement with said pinion, to cause the movement of the pinion thereupon effected by the gear to be shorter than the reverse movement of the pinion effected by said gear; one of said segments having an adjustable wrist to which said spring is attached, and the other segment having a part provided with an opening to receive said wrist to permit the limited relative movement of the segments; said wrist carried upon an arm loosely mounted for revolution about the axis of the segments.

12. In a typewriting machine, the combination with a platen having a pinion, of a drive shaft, a segment fixed thereon, a second segment by the side of the first and loose on said shaft to rotate relatively to the fixed segment, said loose segment provided with a circular series of openings forming a rack, an arm loose upon said shaft and having a releasable pin to engage any of the openings in said rack, and a disk or part fixed upon said shaft and connected by a spring to said arm and also having an opening to receive a wrist provided on said arm to permit limited play of the arm and loose segment relatively to the fixed segment; said segments movable into mesh with said pinion and coöperative to form a continuous driving gear, and said spring permitting the loose segment to yield, to an extent determined by the play of said wrist in said opening, when said loose segment is swung into engagement with said pinion; whereby one stroke of the platen effected by said gear is rendered shorter than the reverse stroke thereof.

13. In a typewriting machine, the com-

bination with a platen having a pinion, of a segment, a second segment by the side of the first and rotatable relatively thereto, the second segment provided with a circular series of openings forming a rack, a loose arm having a releasable pin to engage any of the openings in said rack, a part connected to the first segment and connected by a spring to said arm and also having an opening to receive a wrist provided on said arm to permit limited play of the arm and second segment relatively to the first segment, said segments movable into mesh with said pinion and coöperative to form a continuous driving gear, and a spring permitting the second segment to yield, to an extent determined by the play of said wrist in said opening, when said loose segment is swung into engagement with said pinion.

14. In a typewriting machine, the combination with a platen having a pinion, of a driving segment, a second driving segment at the side of the first and rotatively adjustable relatively thereto, means being provided to hold said segments together, and a third segment by the side of the first and also rotatively adjustable relatively thereto, a rack being provided upon one of said first and third segments with openings at line-space intervals, and the other of said first and third segments having means to engage said rack, said three segments coöperative to form a mutilated continuous driving gear normally out of engagement with said pinion and mounted to swing into mesh therewith, and means being provided to permit the third segment to yield to a limited extent when swung into engagement with the pinioin to cause the first stroke of the platen effected by said driving gear to be shorter than the return stroke thereof.

15. In a typewriting machine, the combination with a platen having a pinion, of a driving segment, a second driving segment at the side of the first and rotatively adjustable relatively thereto, a rack being provided upon one of said segments with openings at line-space intervals, and the other of said segments having means to engage said rack, said segments coöperative to form a mutilated continuous driving gear normally out of engagement with said pinion and mounted to swing into mesh therewith, and means being provided to permit the second segment to yield to a limited extent when swung into engagement with the pinion.

ADOLPHUS S. DENNIS.

Witnesses:
JOHN O. SEIFERT,
K. FRANKFORT.