(12) INTERNATIONAL APPLICATION PUBLISHED UNDER THE PATENT COOPERATION TREATY (PCT)

(19) World Intellectual Property Organization
International Bureau

(43) International Publication Date
18 February 2010 (18.02.2010)

PCT

(10) International Publication Number
WO 2010/019941 A1

(51) International Patent Classification:
H01R 13/627 (2006.01) *H01R 13/66* (2006.01)
H01R 13/658 (2006.01) *H01R 31/06* (2006.01)

(21) International Application Number:
PCT/US2009/054010

(22) International Filing Date:
17 August 2009 (17.08.2009)

(25) Filing Language: English

(26) Publication Language: English

(30) Priority Data:
200820207884.8 15 August 2008 (15.08.2008) CN

(71) Applicant *(for all designated States except US)*: **MOLEX INCORPORATED** [US/US]; 2222 Wellington Court, Lisle, IL 60532 (US).

(72) Inventor; and

(75) Inventor/Applicant *(for US only)*: **WANG, Robert** [CN/CN]; C Zone, Ming Hua Road, No. 3, Industrial, Area Juzhou, Shijie Town, Dongguan (CN).

(74) Agents: **MORELLA, Timothy, M.** et al.; Molex Incorporated, 2222 Wellington Court, Lisle, IL 60532 (US).

(81) Designated States *(unless otherwise indicated, for every kind of national protection available)*: AE, AG, AL, AM, AO, AT, AU, AZ, BA, BB, BG, BH, BR, BW, BY, BZ, CA, CH, CL, CN, CO, CR, CU, CZ, DE, DK, DM, DO, DZ, EC, EE, EG, ES, FI, GB, GD, GE, GH, GM, GT, HN, HR, HU, ID, IL, IN, IS, JP, KE, KG, KM, KN, KP, KR, KZ, LA, LC, LK, LR, LS, LT, LU, LY, MA, MD, ME, MG, MK, MN, MW, MX, MY, MZ, NA, NG, NI, NO, NZ, OM, PE, PG, PH, PL, PT, RO, RS, RU, SC, SD, SE, SG, SK, SL, SM, ST, SV, SY, TJ, TM, TN, TR, TT, TZ, UA, UG, US, UZ, VC, VN, ZA, ZM, ZW.

(84) Designated States *(unless otherwise indicated, for every kind of regional protection available)*: ARIPO (BW, GH, GM, KE, LS, MW, MZ, NA, SD, SL, SZ, TZ, UG, ZM, ZW), Eurasian (AM, AZ, BY, KG, KZ, MD, RU, TJ, TM), European (AT, BE, BG, CH, CY, CZ, DE, DK, EE, ES, FI, FR, GB, GR, HR, HU, IE, IS, IT, LT, LU, LV, MC, MK, MT, NL, NO, PL, PT, RO, SE, SI, SK, SM, TR), OAPI (BF, BJ, CF, CG, CI, CM, GA, GN, GQ, GW, ML, MR, NE, SN, TD, TG).

Declarations under Rule 4.17:

— *as to the identity of the inventor (Rule 4.17(i))*

[Continued on next page]

(54) Title: TRANSITION CONNECTOR

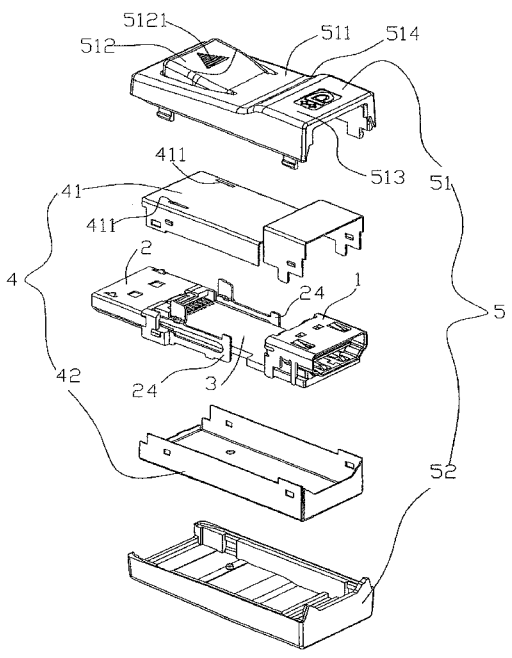

FIG. 1

(57) Abstract: A transition connector comprising first (1) and second (2) connectors, a circuit board (3), a shielding casing and an outer housing is disclosed. One end of the circuit board is coupled to the first connector, and the other to the second connector. The shielding casing (4) surrounds the connectors, and is connected therewith via the circuit board. The outer housing (5) covers the shielding casing. The second connector comprises an insulating housing (21), a plurality of conductive terminals inserted thereon, a shielding housing (23) covering periphery of the insulating housing and at least one hook member (24) fixed on the insulating housing. Each hook member is provided with two hooks (2441), protruding upwardly through a shielding housing of the second connector, and press portions (2442), protruding upwardly through the shielding casing and extending to a position below the outer housing. Finally, the outer housing is provided with a press button (512), located above the press portions and two hooks of the hook member, which can be pushed down if pressed.

WO 2010/019941 A1

— *as to applicant's entitlement to apply for and be granted a patent (Rule 4.17(ii))*

— *as to the applicant's entitlement to claim the priority of the earlier application (Rule 4.17(iii))*

— *of inventorship (Rule 4.17(iv))*

Published:

— *with international search report (Art. 21(3))*

TRANSITION CONNECTOR

BACKGROUND OF THE INVENTION

FIELD OF THE INVENTION

The Present Invention relates, generally, to a transition connector, in particular to a transition connector capable of achieving a transition between a first connector and a second connector.

DESCRIPTION OF THE RELATED ART

Conventional transition connectors are capable of achieving a transition between a first connector and a second connector. For example, Chinese Patent No. 200420007132.9 discloses a transition connector, which comprises an original connector, two circuit boards and a new connector. One of circuit boards is provided with golden fingers at two ends of one or both surfaces thereof and electrically connected between golden fingers at two ends. Two ends of the circuit board can be respectively interposed between the rows of conductive terminals of the original connector and the new connector, so that the golden fingers on both surfaces of the circuit board are in electrical contact with the conductive terminals by welding and bonding the contact points. The other circuit board is interposed between another row of conductive terminals of the original connector and the new connector in a similar manner as above mentioned, so that the golden fingers on one surface of the circuit board are in electrical contact with the corresponding conductive terminals by welding and bonding the contact points. After plastic injection molding, the transition connector is achieved. In order to ensure the reliable and stable connection between the transition connector and an electric device, a through hole, through which a fasten member such as a bolt pass, is provided at each side of the new connector. Thereby, the transition connector could be mounted onto the electric device by screwing and tightening the fasten members, and be detached from the electric device by reversely screwing and loosening the fasten members. However, it is inconvenient to mount and detach the transition connector to and from the electric device.

SUMMARY OF THE INVENTION

For overcoming the deficiencies in the prior art, the object of the Present Invention provides a transition connector which can be conveniently mounted and detached from the corresponding connector in a simple hook manner.

In order to achieve the above object, a transition connector in the Present Invention comprises: a first connector; a second connector; a circuit board, one end of which is electrically connected with the first connector, and the other end of which is electrically connected with the second connector; a shielding casing provided around periphery of the first connector and the second connector connected with each other via the circuit board; and an outer housing covering periphery of the shielding casing; the second connector comprises an insulating housing, a plurality of conductive terminals inserted on the insulating housing, a shielding housing covering periphery of the insulating housing and at least one hook member fixed on the insulating housing; the at least one hook member is provided with two hooks protruding upwardly through a shielding housing of the second connector and press portions protruding upwardly through the shielding casing and extending to a position below the outer housing; and the outer housing is provided with a press button which is correspondingly located above the press portions of the hook member and two hooks of the hook member can be pushed down if the press button is pressed.

Preferably, the hook member is in a "U" shape and comprises a fixed arm fixed on the insulating housing and an elastic arm connected with the fixed arm and capable of elastically moving up and down; the hook is located at an end of the elastic arm, and the press portion is located in middle of the elastic arm. The number of the hook member is two and two hook members are located at both sides of the second connector respectively. Two slots are provided on upper surface of the shielding housing of the second connector, and two hooks of the hook members protrude upwardly through the two slots. The shielding casing comprises an upper casing and a lower casing coupled with each other; the upper casing is provided with two openings at upper surface thereof, so that two press portions of the two hook members are allowed to pass through two openings and further protrude to a position below the outer housing. The press button is disposed at a position of the outer housing adjacent to the second connector, and a step portion is provided at a position of the outer housing adjacent to the first connector. The outer housing comprises an upper outer housing and a lower outer housing coupled with

each other; the press button and the step portion are located on upper surface of the upper outer housing; and a plurality of antislip stripes are provided on upper surface of the press button. The second connector is a plug connector in accordance with Displayport Interface standard and the first connector is a socket connector in accordance with HDMI standard. The conductive terminals of the second connector are arranged in upper and lower rows, and two rows of the conductive terminals are respectively soldered onto upper and bottom surfaces of the circuit board; the first connector comprises an insulating housing, a plurality of conductive terminals insertedly disposed on the insulating housing and a shielding housing covering periphery of the insulating housing; and the conductive terminals of the first connector are soldered onto one surface of the circuit board.

In comparison with the prior art, when installing and locking the transition connector of the Present Invention onto an electric device, it is only required to directly insert the Displayport plug connector onto a Displayport socket connector on the electric device and meanwhile have the hooks of two hook members firstly pushed down and then elastically moved upwardly to hook onto the Displayport socket connector. Thereby, the transition connector is locked and combined onto the electric device and such combination is not easy to be disengaged accidentally. When detaching and unlocking the transition connector, it is only required to press the press button on the outer housing to push the hooks down so that the transition connector could be easily and conveniently detached.

BRIEF DESCRIPTION OF THE FIGURES

The organization and manner of the structure and operation of the Present Invention, together with further objects and advantages thereof, may best be understood by reference to the following Detailed Description, taken in connection with the accompanying Figures, wherein like reference numerals identify like elements, and in which:

Figure 1 is an exploded perspective view of the transition connector according to an embodiment of the Present Invention shown;

Figure 2 is another exploded perspective view of the transition connector of Fig. 1;

Figure 3 is an exploded perspective view showing the first connector, the second connector and the circuit board of the transition connector of Fig. 1;

Figure 4 is an exploded perspective view of the transition connector of Fig. 1, showing the combination relationship between the housing and the combined other parts;

Figure 5 is an exploded perspective view of the transition connector of FIG. 4;

Figure 6 is a perspective view of the transition connector of FIG. 1;

Figure 7 is a front view of the transition connector of FIG. 1; and

Figure 8 is an enlarged cross-sectional view along the Line A-A in FIG. 7.

DESCRIPTION OF THE PREFERRED EMBODIMENTS

While the Present Invention may be susceptible to embodiment in different forms, there is shown in the Figures, and will be described herein in detail, specific embodiments, with the understanding that the discussion herein is to be considered an exemplification of the principles of the Present Invention, and is not intended to limit the Present Invention merely to that as illustrated. Further, in the embodiments illustrated in the Figures, representations of directions such as up, down, left, right, front, rear and the like, used for explaining the structure and movement of the various elements of the Present Invention, are not absolute, but relative. These representations are appropriate when the elements are in the position shown in the Figures. If the description of the position of the elements changes, however, it is assumed that these representations are to be changed accordingly.

Referring to FIGS. 1-3, the transition connector of the Present Invention comprises first connector 1, second connector 2, circuit board 3, shielding casing 4 and outer housing 5. First connector 1, which is preferably a socket connector in accordance with HDMI (High-Definition Multimedia Interface) standard, preferably comprises insulating housing 11; conductive terminals 12 insertedly disposed on insulating housing 11; and shielding housing 13 covering the periphery of insulating housing 11.

Second connector 2, which is preferably a plug connector in accordance with Displayport Interface standard, preferably comprises insulating housing 21; conductive terminals 22 provided on insulating housing 21; shielding housing 23 covering the periphery of insulating housing 21 and being provided with slots 2311 on upper surface 231 thereof; and hook members 24 fixed on insulating housing 21.

As shown in FIG. 3, each hook member 24, preferably formed in a "U" shape, comprises fixed arm 243, fixed on insulating housing 21, and elastic arm 244, preferably in the shape of a

cantilever and capable of elastic motion. Hook 2441 is provided at an end of elastic arm 244, and press portion 2442 protrudes upwardly from the middle of elastic arm 244. Referring to FIGS. 1-4, for fixing each hook member 24, fixed arm 243 is insertedly fixed on insulating housing 21 while the end of elastic arm 244 is extended into shielding housing 23 along the longitudinal direction of insulating housing 21 such that hook 2441 protrudes upwardly out of slot 2311 on upper surface 231 of shielding housing 23, and press portion 2442 on elastic arm 244 is located behind second connector 2.

In this embodiment, two hook members 24 are two separate parts. However, in other possible embodiments, the middle of elastic arms 244 of two hook members 24 may be integrally connected with each other via a crossbeam (not shown) interconnected between two hook members 24.

As shown in FIG. 3, first group of golden fingers 31, provided at one end of circuit board 3, and second group of golden fingers 32, provided on upper and bottom surfaces of another end of circuit board 3, are interconnected therebetween via circuits (not shown). Two hook members 24 are installed at two sides of circuit board 3 respectively. First connector 1 is fixed at the end of circuit board 3 provided with first group of golden fingers 31, and conductive terminals 12 of first connector 1 are electrically connected with first group of golden fingers 31. Moreover, conductive terminals 22 of second connector 2 are arranged in upper and lower rows and the two rows of conductive terminals 22 are soldered onto second group of golden fingers 32 on upper and bottom surfaces of another end of circuit board 3. Thereby, the transition of electrical connection from first connector 1 to second connector 2 could be achieved.

As shown in FIGS. 1-2, shielding casing 4 comprises upper casing 41 and lower casing 42. The upper surface of upper casing 41 is provided with two openings 411, through which press portion 2442 of elastic arms 244 of two hook members 24 may be inserted. Upper casing 41 and lower casing 42 of shielding casing 4 are integrally coupled with each other to envelope around first connector 1 and second connector 2, and interconnected via circuit board 3. Hooks 2441 of second connector 2 are exposed and press portions 2442 of two hook members 24 fixed on second connector 2 protrude upwardly through two openings 411 on the upper surface of upper casing 41 of shielding casing 4 and reach the underside of outer housing 5.

As shown in FIGS. 1, 2 and 4, outer housing 5 comprises upper outer housing 51 and lower outer housing 52. The upper surface of upper outer housing 51 includes first plane 511,

second plane 513 slightly higher than first plane 511, and step portion 514 formed between first plane 511 and second 513, so as to facilitate applying the force onto the connector. First plane 511 of upper outer housing 51 is further provided with press button 512 corresponding to two openings 411 of shielding casing 4, for pressing two press portions 2442 of two hook members 24 through two openings 411. Press button 512 is provided with anti-slip stripes 5121. Please see FIGS. 6-8, upper outer casing 51 and lower outer casing 52 are integrally coupled with each other to envelope around shield casing 4 and first and second connectors 1, 2 enveloped by shield casing 4, and hook 2441 of second connector 2 is exposed.

The assembly process of the transition connector according to the preferred embodiment of the Present Invention mainly comprises the following steps: soldering conductive terminals 12 of first connector 1 and conductive terminals 22 of second connector 2 onto first group of golden fingers 31 and second group of golden fingers 32 of circuit board 3, respectively; after the combination of first connector 1, second connector 2 and circuit board 3, covering the combined body by upper casing 41 and lower casing 42 from upper and lower faces of the combined body and coupling upper casing 41 and lower casing 42 with each other to be an integral in such a way that press portions 242 of hook members 24 correspondingly protrude out of openings 411 of upper casing 41; then, covering shield casing 4 by upper outer housing 51 and lower outer housing 52 from upper and lower faces of shielding casing 4 and coupling upper outer housing 51 and lower outer housing 52 with each other to be an integral, so as to obtain the transition connector as shown in FIG. 6. As can be seen from FIGS. 7-8, press portions 2442 of hook members 24 protrude to a position below upper outer housing 51 and corresponding to press button 512, so that transition connector 1 could be unlocked by pressing press button 512 to push hooks 2441 of hook members 24 down.

Compared with the prior art, when installing and locking the transition connector onto an electric device, it is only required to directly insert second plug connector 2 in accordance with Displayport interface standard onto a Displayport socket connector (not shown) on the electric device and meanwhile have hooks 2441 of hook members 24 firstly pushed down and then elastically moved upwardly to hook onto the Displayport socket connector. Thereby, the transition connector is combined onto the electric device and such combination is not easy to be disengaged accidentally. When detaching and unlocking the transition connector, it is only required to press press button 512 on outer housing 5 to push press portions 2442 under press

button 512 and thereby elastic arms 244 of hook members 24 down, so that hooks 2441 at the ends of elastic arms 244 are moved downwards. Thereby, hooks 2441 are unlocked from the socket connector on the electric device so that the transition connector could be easily detached.

While a preferred embodiment of the Present Invention is shown and described, it is envisioned that those skilled in the art may devise various modifications without departing from the spirit and scope of the foregoing Description and the appended Claims.

CLAIMS

WHAT IS CLAIMED IS:

1. A transition connector comprising:

a first connector;

a second connector;

a circuit board, one end of which is electrically connected with the first connector, and the other end of which is electrically connected with the second connector;

a shielding casing surrounding periphery of the first connector and the second connector connected with each other via the circuit board; and

an outer housing covering periphery of the shielding casing;

being characterized in that the second connector comprises an insulating housing, a plurality of conductive terminals inserted on the insulating housing, a shielding housing covering periphery of the insulating housing and at least one hook member fixed on the insulating housing;

the at least one hook member is provided with two hooks protruding upwardly through a shielding housing of the second connector and press portions protruding upwardly through the shielding casing and extending to a position below the outer housing; and

the outer housing is provided with a press button which is correspondingly located above the press portions of the hook member and two hooks of the hook member can be pushed down if the press button is pressed.

2. The transition connector according to Claim 1, wherein the hook member is in a "U" shape and comprises a fixed arm fixed on the insulating housing and an elastic arm connected with the fixed arm and capable of elastically moving up and down; the hook is located at an end of the elastic arm, and the press portion is located in middle of the elastic arm.

3. The transition connector according to Claim 2, wherein the number of the hook member is two and two hook members are located at both sides of the second connector respectively.

4. The transition connector according to Claim 3, wherein two slots are provided on upper surface of the shielding housing of the second connector, and two hooks of the hook members protrude upwardly through the two slots.

5. The transition connector according to Claim 4, wherein the shielding casing comprises an upper casing and a lower casing coupled with each other; the upper casing is provided with two openings at upper surface thereof, so that two press portions of the two hook members are allowed to pass through two openings and further protrude to a position below the outer housing.

6. The transition connector according to Claim 1, wherein the press button is disposed at a position of the outer housing adjacent to the second connector, and a step portion is provided at a position of the outer housing adjacent to the first connector.

7. The transition connector according to Claim 6, wherein the outer housing comprises an upper outer housing and a lower outer housing coupled with each other; the press button and the step portion are located on upper surface of the upper outer housing; and a plurality of anti-slip stripes are provided on upper surface of the press button.

8. The transition connector according to Claim 1, wherein the second connector is a plug connector in accordance with Displayport Interface standard and the first connector is a socket connector in accordance with HDMI standard.

9. The transition connector according to Claim 1, wherein the conductive terminals of the second connector are arranged in upper and lower rows, and two rows of the conductive terminals are respectively soldered onto upper and bottom surfaces of the circuit board; the first connector comprises an insulating housing, a plurality of conductive terminals inserted on the insulating housing and a shielding housing covering periphery of the insulating housing; and the conductive terminals of the first connector are soldered onto one surface of the circuit board.

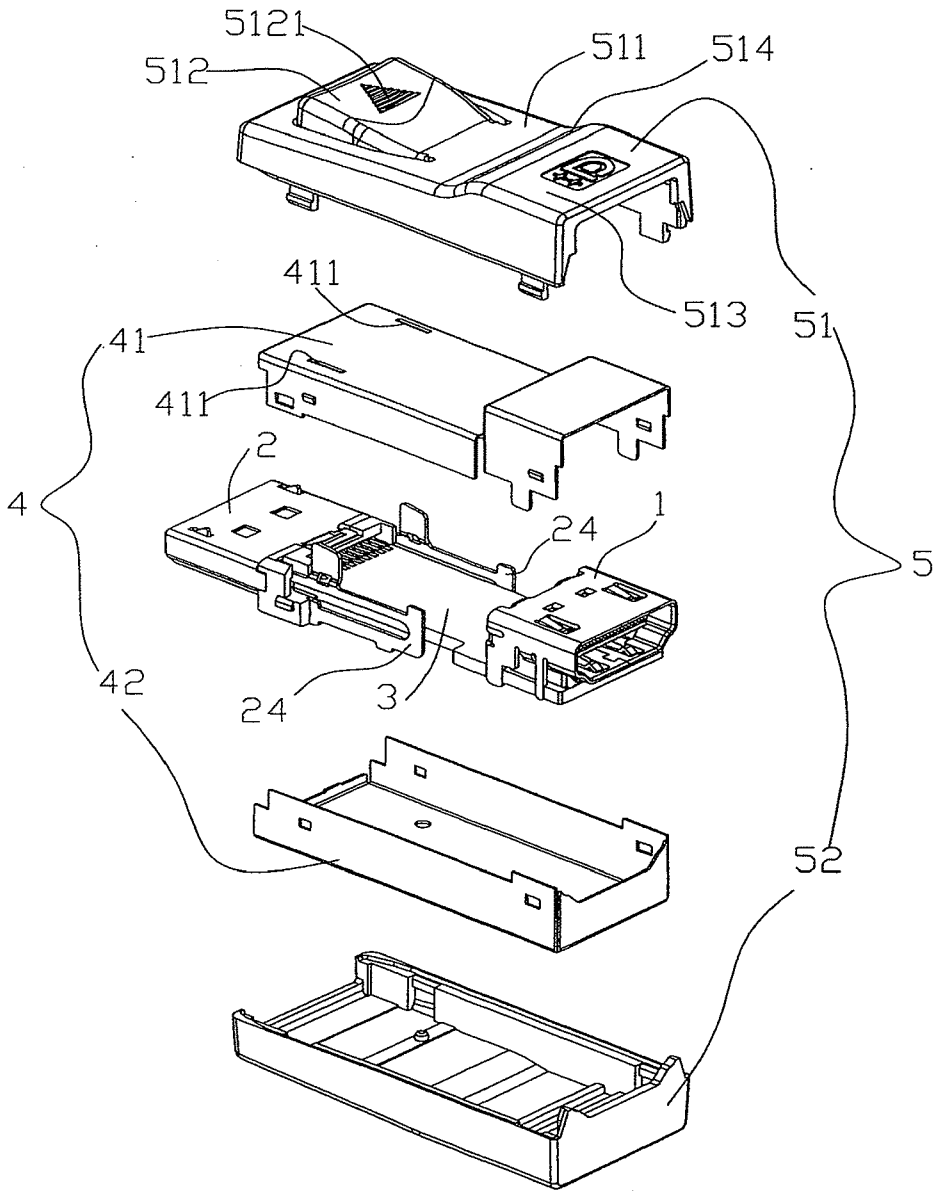

FIG. 1

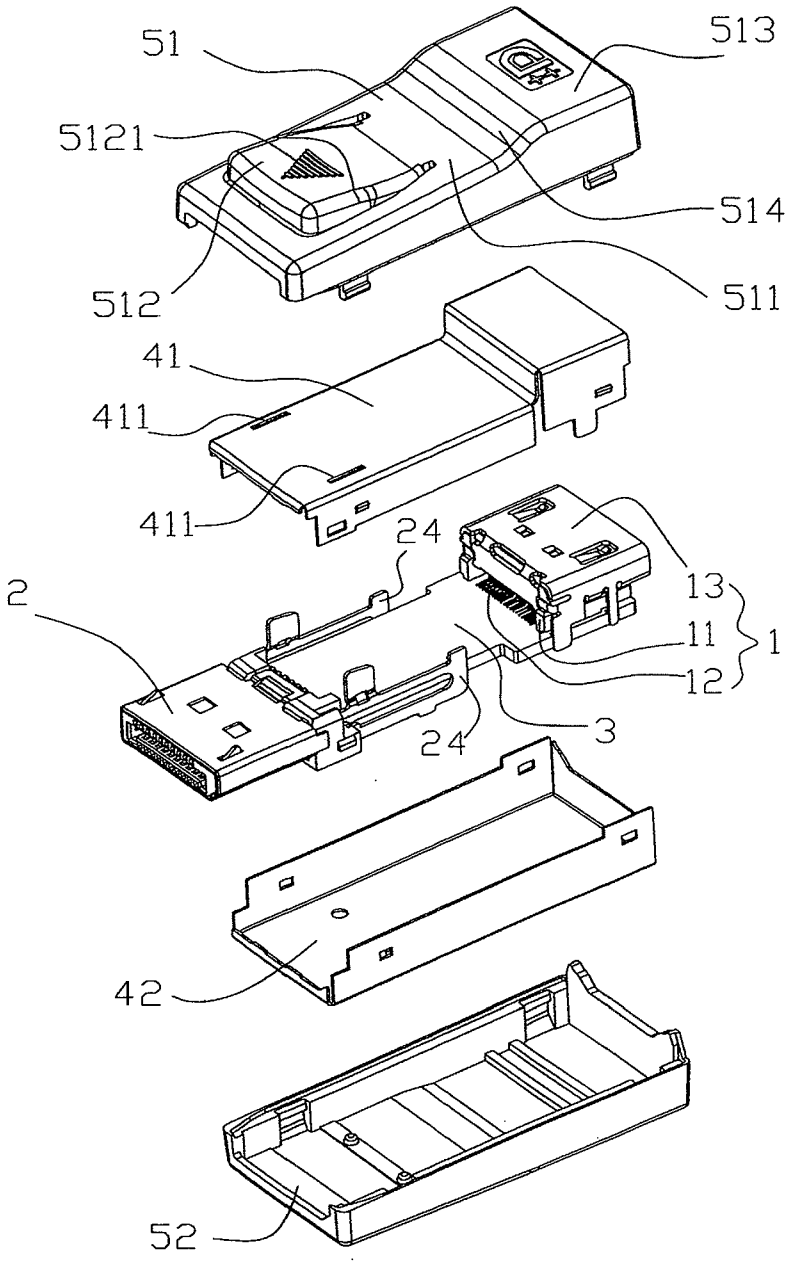

FIG. 2

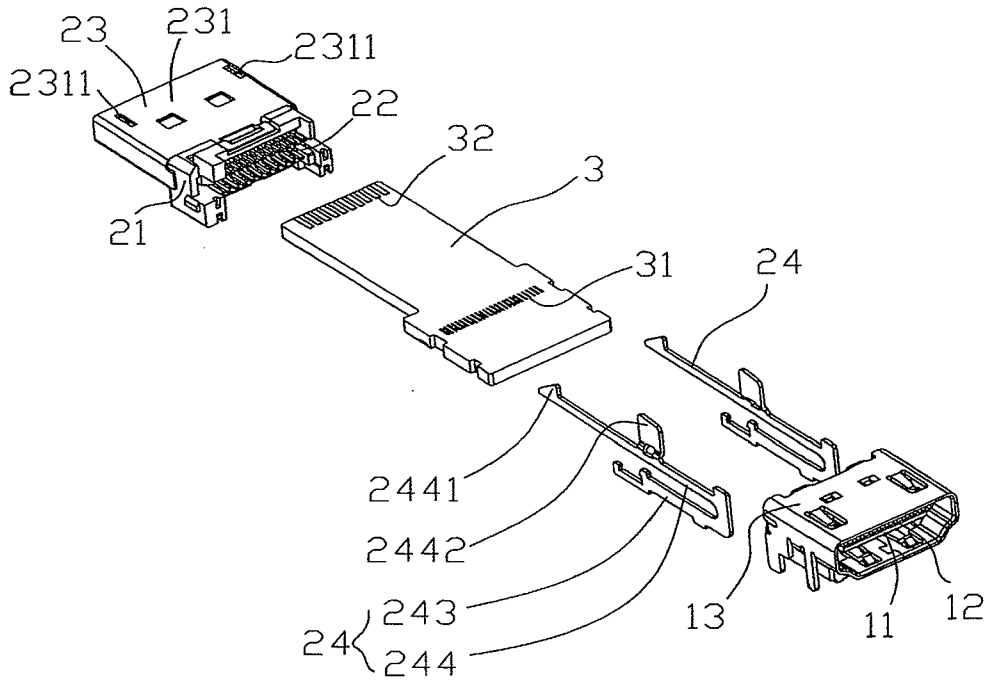
23
231
2311
2311
22
32
3
21
31
24
2441
2442
243
24
244
13
11
12

FIG. 3

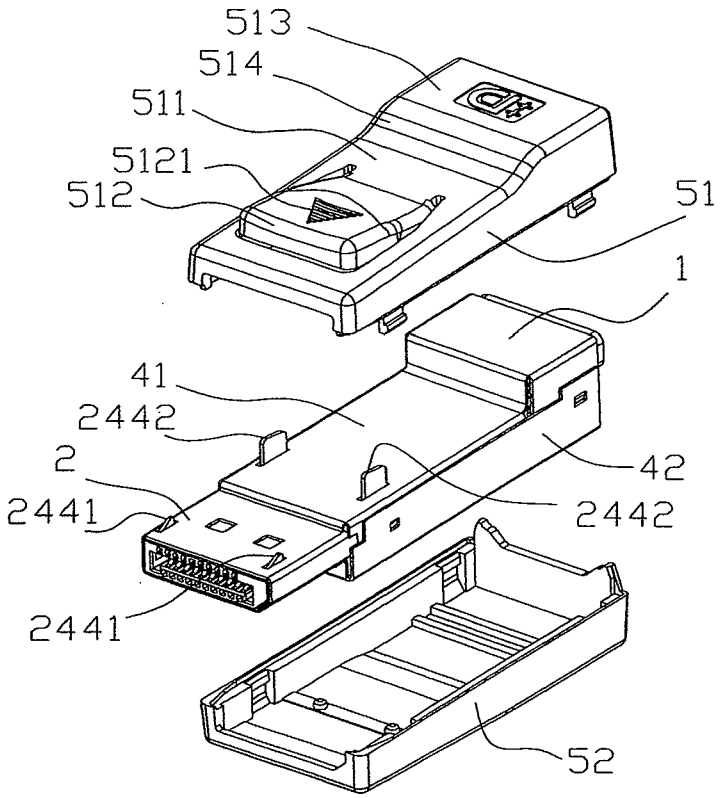
513
514
511
5121
512
51
1
41
2442
2
42
2441
2442
2441
52

FIG. 4

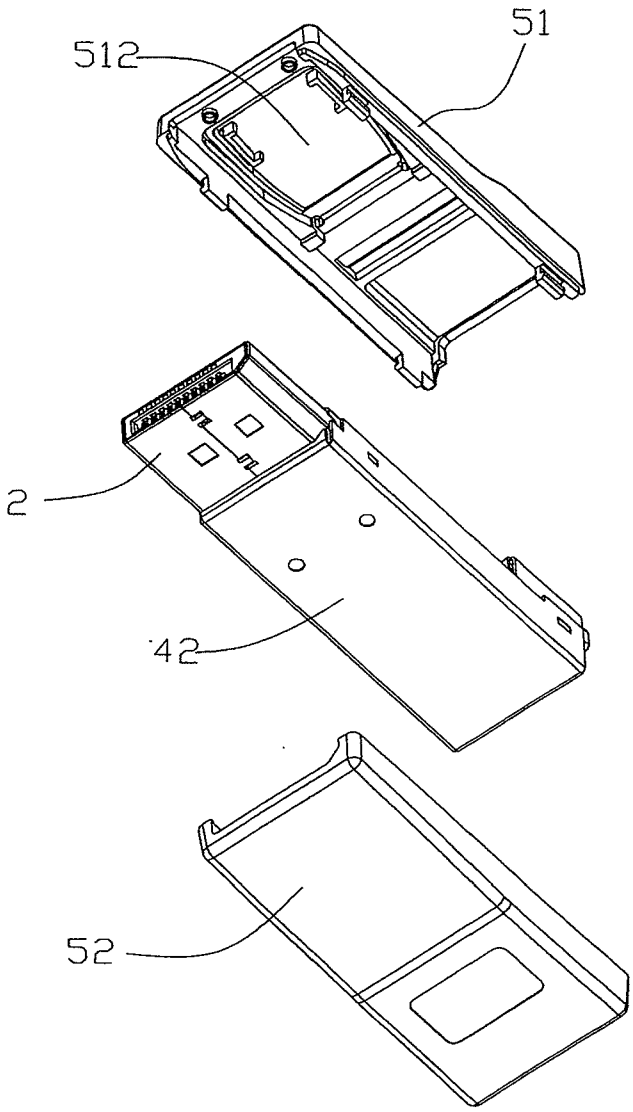

FIG. 5

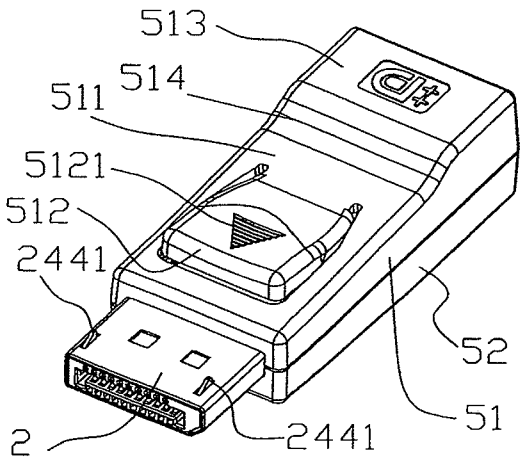

FIG. 6

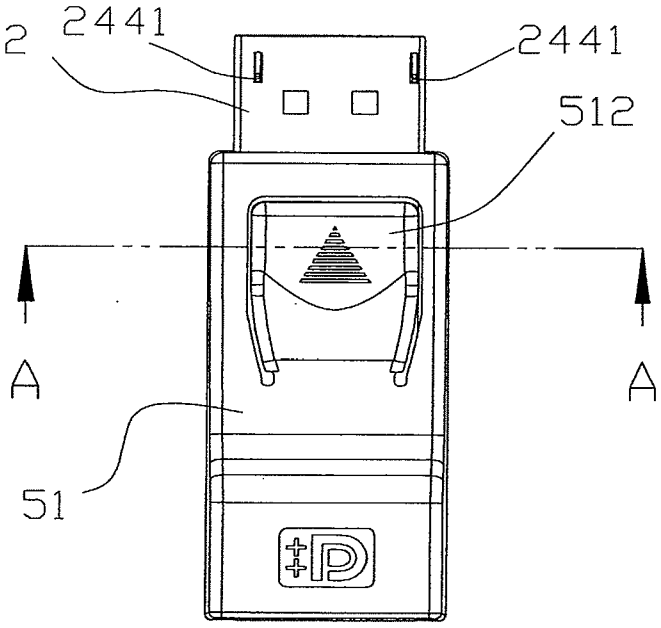

FIG. 7

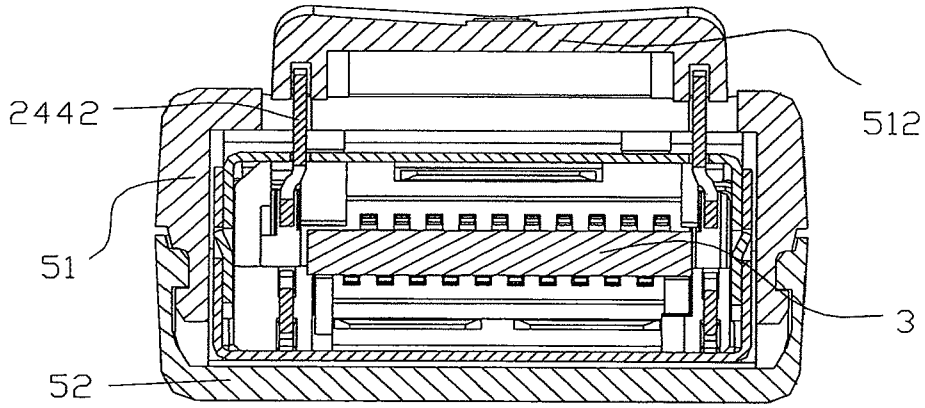

FIG. 8

INTERNATIONAL SEARCH REPORT

International application No
PCT/US2009/054010

A. CLASSIFICATION OF SUBJECT MATTER
INV. H01R13/627 H01R13/658 H01R13/66 H01R31/06

According to International Patent Classification (IPC) or to both national classification and IPC

B. FIELDS SEARCHED

Minimum documentation searched (classification system followed by classification symbols)
H01R

Documentation searched other than minimum documentation to the extent that such documents are included in the fields searched

Electronic data base consulted during the international search (name of data base and, where practical, search terms used)
EPO-Internal

C. DOCUMENTS CONSIDERED TO BE RELEVANT

Category*	Citation of document, with indication, where appropriate, of the relevant passages	Relevant to claim No.
Y	US 5 836 774 A (TAN HAW-CHAN [US] ET AL) 17 November 1998 (1998-11-17) figures -----	1-9
Y	US 2005/227537 A1 (PENG SHIAO-BIN [TW]) 13 October 2005 (2005-10-13) figure 2 -----	1-9
A	US 2007/134990 A1 (SU YU-HUNG [TW] ET AL) 14 June 2007 (2007-06-14) figures 1-3 -----	1

☐ Further documents are listed in the continuation of Box C.

☒ See patent family annex.

* Special categories of cited documents :

"A" document defining the general state of the art which is not considered to be of particular relevance

"E" earlier document but published on or after the international filing date

"L" document which may throw doubts on priority claim(s) or which is cited to establish the publication date of another citation or other special reason (as specified)

"O" document referring to an oral disclosure, use, exhibition or other means

"P" document published prior to the international filing date but later than the priority date claimed

"T" later document published after the international filing date or priority date and not in conflict with the application but cited to understand the principle or theory underlying the invention

"X" document of particular relevance: the claimed invention cannot be considered novel or cannot be considered to involve an inventive step when the document is taken alone

"Y" document of particular relevance: the claimed invention cannot be considered to involve an inventive step when the document is combined with one or more other such documents, such combination being obvious to a person skilled in the art.

"&" document member of the same patent family

Date of the actual completion of the international search	Date of mailing of the international search report
29 October 2009	06/11/2009

Name and mailing address of the ISA/	Authorized officer
European Patent Office, P.B. 5818 Patentlaan 2 NL - 2280 HV Rijswijk Tel. (+31-70) 340-2040, Fax: (+31-70) 340-3016	Langbroek, Arjen

INTERNATIONAL SEARCH REPORT

Information on patent family members

International application No
PCT/US2009/054010

Patent document cited in search report	Publication date	Patent family member(s)	Publication date
US 5836774 A	17-11-1998	CN 1182292 A	20-05-1998
		CN 2308995 Y	24-02-1999
US 2005227537 A1	13-10-2005	TW 256006 Y	21-01-2005
US 2007134990 A1	14-06-2007	NONE	