United States Patent [19]

Ouska

[11] **3,795,323**

[45] **Mar. 5, 1974**

[54] **ARTICLE ROLL-OVER DEVICE**

[76] Inventor: **Ralph C. Ouska,** 218 E. The Ln., Hinsdale, Ill. 60521

[22] Filed: **May 11, 1972**

[21] Appl. No.: **252,177**

Related U.S. Application Data

[62] Division of Ser. No. 122,713, March 10, 1971.

[52] **U.S. Cl.** ..... **214/1 Q**
[51] **Int. Cl.** **B65g 7/00**
[58] **Field of Search**.. 214/1 Q, 1 QF, 130 R, 130 C, 214/148, 46.32, 146 S, 313; 198/33 AD

[56] **References Cited**

UNITED STATES PATENTS

2,786,588	3/1957	Hill	214/130 C X
2,567,819	9/1951	Matteson	214/1 Q
2,739,691	3/1956	Boehm	214/130 C X
3,123,236	3/1964	Contaldo	214/1 Q X
3,011,657	12/1961	Schutze et al.	214/46.32 X

Primary Examiner—Frank E. Werner
Attorney, Agent, or Firm—John F. Verhoeven; C. E. Tripp

[57] **ABSTRACT**

A coil of metal or paper strip to be upended or downended is placed on one bed of a cradle which is constructed of semicircular vertical parallel plates and which is mounted in rolling engagement on a track beneath the cradle. The cradle is then rolled along the track one-quarter turn or 90° by a drive system to axially reorient and laterally transfer the coil. The drive system includes a combination of pivotally interconnected levers which are actuated by a hydraulic cylinder. As the cradle reaches its end point, the upended or downended coil then rests on a second bed of the cradle perpendicular to the initial bed.

4 Claims, 5 Drawing Figures

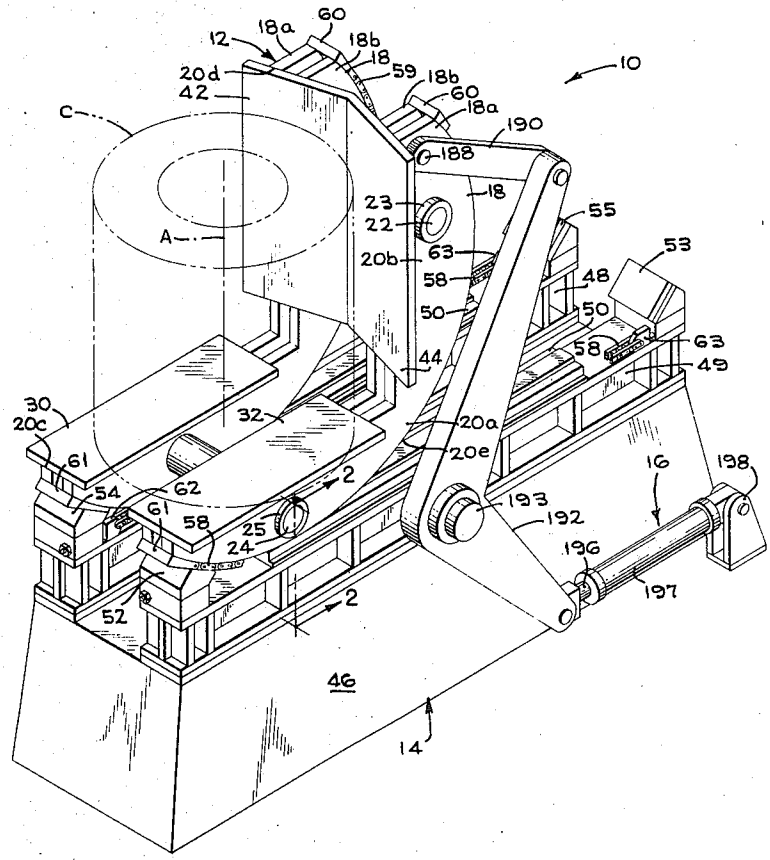

FIG_1

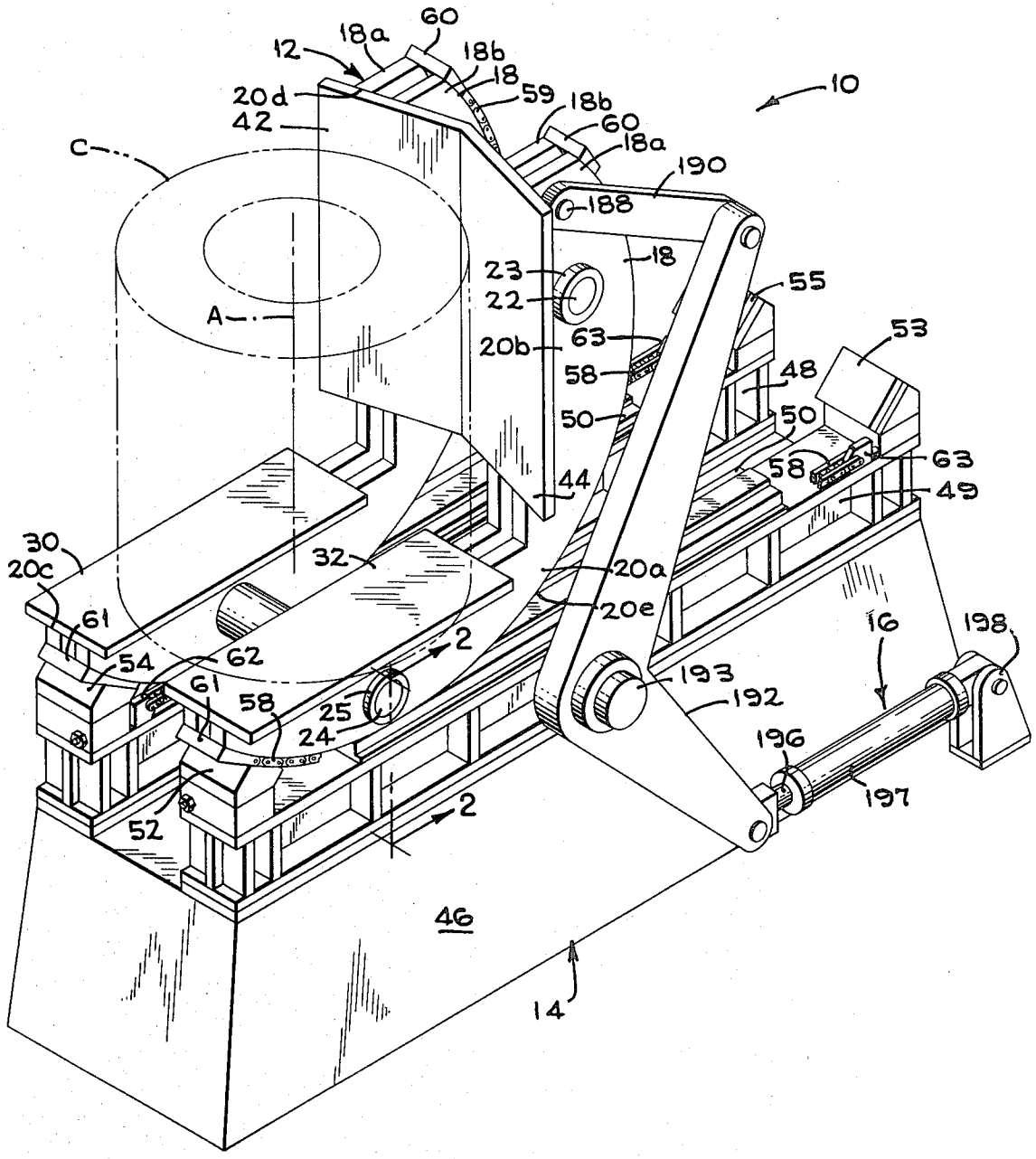
10
12
18a
60
18b
18
59
18b
60
18a
20d
42
C
190
188
18
23
22
A
55
53
20b
63
58
48
50
50
58
63
49
44
30
20c
32
20a
20e
61
54
62
2
16
198
61
58
25
24
193
192
196
197
52
2
46
14

FIG_2

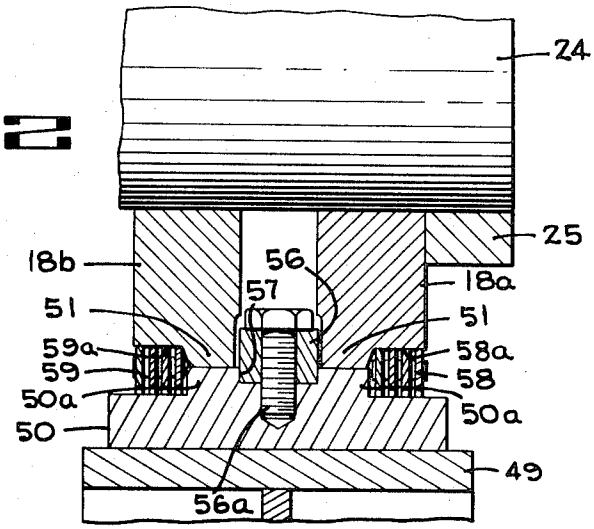
24
25
18b
56
57
18a
51
51
59a
58a
59
58
50a
50a
50
49
56a

FIG_5

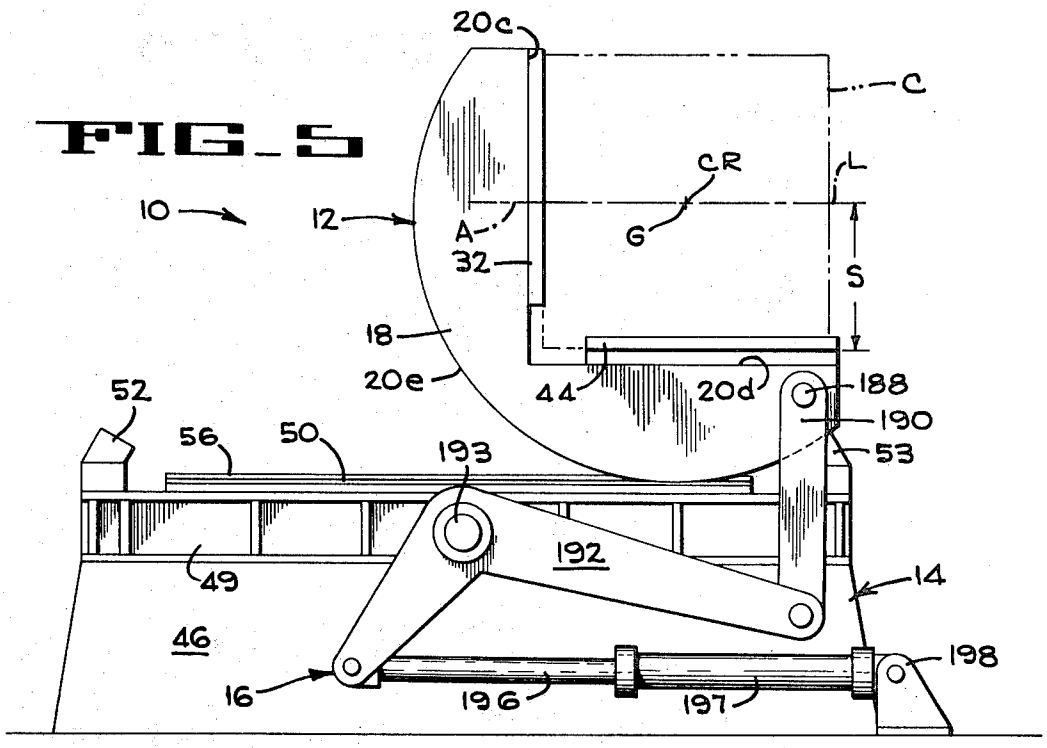
20c
C
CR
L
10
12
A
G
32
S
18
20e
44
20d
188
190
52
56
50
193
53
192
14
49
46
198
16
196
197

FIG_3

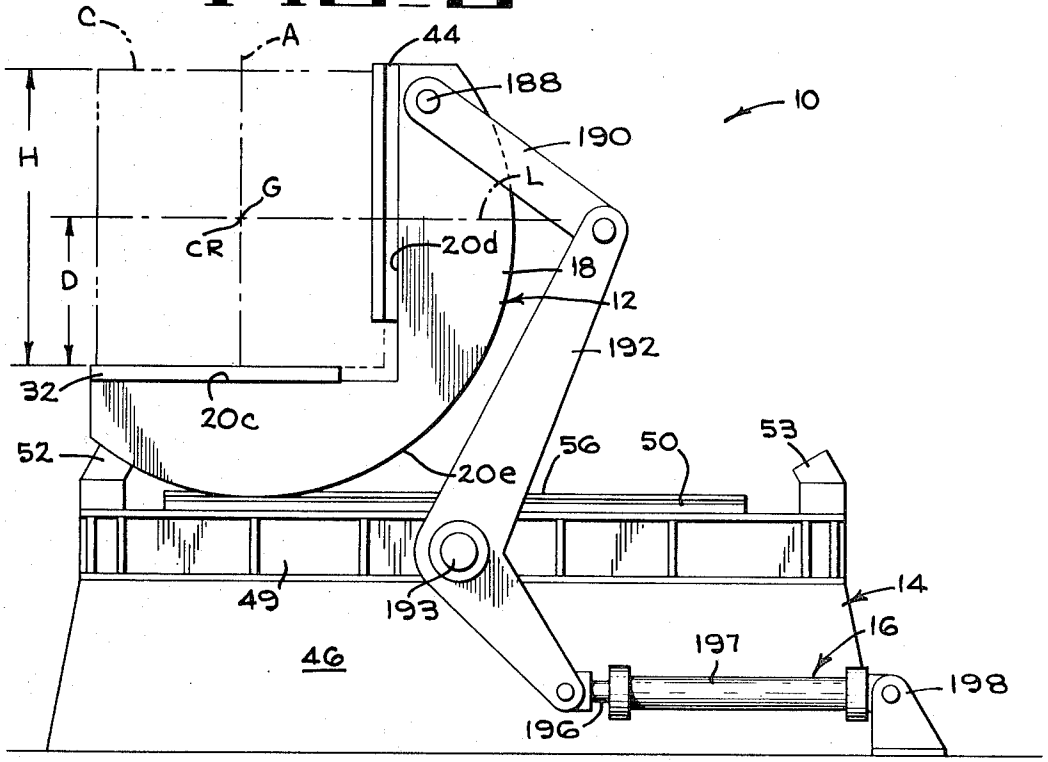
C
A
44
188
10
190
H
L
G
CR
20d
18
D
12
192
32
20c
52
20e
56
50
53
49
193
14
16
197
46
198
196

FIG_4

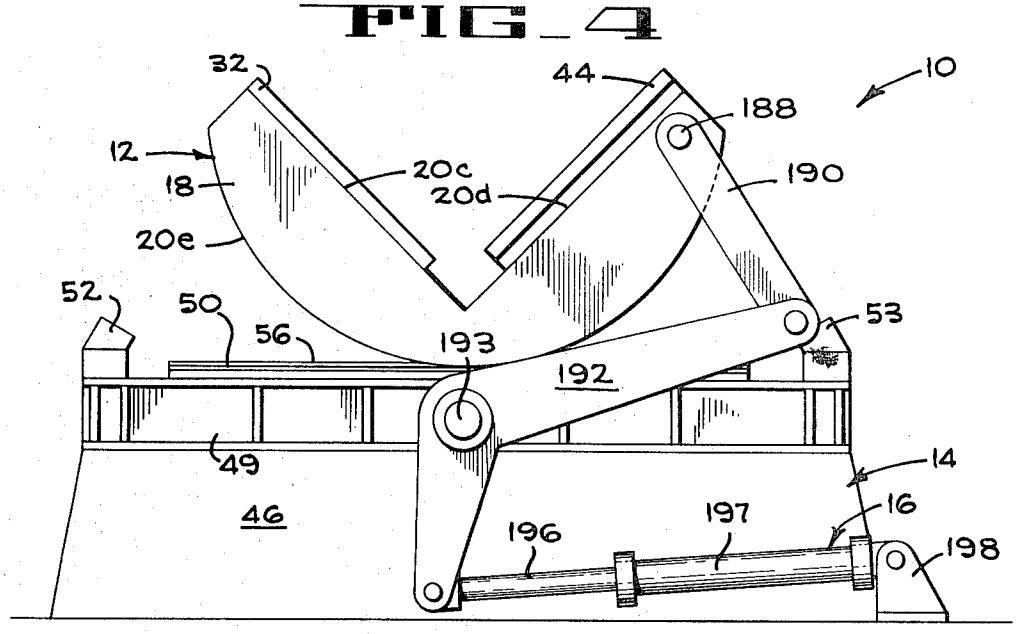
32
44
10
188
12
20c
18
20d
190
20e
52
50
56
193
53
192
49
14
46
16
197
196
198

ARTICLE ROLL-OVER DEVICE

This application is a division of U.S. Pat. application Ser. No. 122,713, filed Mar. 10, 1971.

BACKGROUND OF THE INVENTION

This invention relates to article handling apparatus and more particularly to apparatus for transferring coils of material from one operation to another.

Rolling mills, warehouses and manufacturing plants handle large and heavy coils of material, such as steel or other metal strip, or paper, by crane, truck or conveyor. These coils may weigh sixty thousand pounds or more. Sometimes the coils are carried on end and sometimes on their sides, and frequently the coil has to be turned over either from end to side or from side to end.

To avoid damaging the coiled material, special means for accomplishing this change of position have been employed. One of the most common types of devices used for repositioning a coil or similar object has a pair of beds mounted on a member that rotates on an axis which is fixed in space, at least during rotation, such as shown in the patent to Huffington U.S. Pat. No. 2,880,889. The coil, which is received on one bed in a particular orientation, is upended in place, transferred to the other bed and brought to rest in a different orientation. Sometimes, the coil receiving member can move laterally before or after reorientation of the coil as shown, for example, in the patent to Matteson et al. U.S. Pat. No. 2,567,819 and, to a limited extent, in the patent to Kratzenberg U.S. Pat. No. 2,599,846. The devices which move laterally only before or after coil reorientation require more complicated drive mechanism to impart distinct translational and rotary movement to the coil while the devices which impart only rotary movement to the coil sacrifice the ability to move the coil laterally. In some of these devices, the need for raising the coil over a pivot center requires that the machines be very large and heavy and have drive systems capable of developing very large torque and horsepower.

SUMMARY OF THE INVENTION

The present invention relates to an improved device for upending or downending coils of strip steel and other coiled materials or possibly blocks of material in which there is lateral shifting of the material as well as rotation thereof. The apparatus of this invention includes a cradle constructed of semicircular roll segments or arcuate segments mounted in rolling engagement on a track which in turn is supported by some form of supporting structure. The cradle is rolled along the track by a drive system, which uses pivotally interconnected levers in combination with a hydraulic cylinder. As the piston of the cylinder is extended the levers are pivoted and consequentially roll the cradle along the track from one position to the other. To return the cradle to its initial position the piston is withdrawn and the cradle is rolled to the starting position.

In operation, a coil of material is placed on an initially horizontal bed or support surface of the cradle, the cradle is rolled through one-quarter turn or 90° along the track and the upended or downended coil, now resting on the bed or support surface perpendicular to the initially horizontal bed and in a different lateral position, is removed by whatever means available.

The empty cradle is then rolled back to its starting position ready to load another coil.

It is therefore one of the objects of this invention to provide coil handling apparatus adapted to receive varying diameter coils with their axes extending in either vertical or horizontal direction, rotate the coils, and transfer them so that their axes will be perpendicular to the initial direction of the axes.

It is another object of this invention to minimize or completely eliminate lifting of the center of gravity of the coil while still retaining a desired translation and thus greatly reduce torque and power requirements.

Further objects and advantages of the invention will become apparent by reference to the following specification taken in conjunction with the accompanying drawings.

BRIEF DESCRIPTION OF THE DRAWINGS

FIG. 1 is a perspective of the coil roll-over device of the present invention with parts broken away.

FIG. 2 is a sectional view on the line 2—2 of FIG. 1.

FIGS. 3, 4 and 5 are side elevations of the coil roll-over device with a hydraulic piston-lever drive system in three operational positions.

DESCRIPTION OF THE PREFERRED EMBODIMENTS

The coil roll-over device **10** (FIGS. **1** to **4**) includes a cradle **12**, a supporting structure **14**, and a drive system **16**. The cradle itself is composed of the two rigid, composite, arcuate side frames **18** each of which includes two spaced segments **18***a* and **18***b* which are maintained in a parallel vertical relation by transverse shafts **22** and **24** secured therein. Collars **23** and **25** are rigidly attached to the shafts **22** and **24** respectively at the inner and outer surfaces of each side frame **18** to maintain the frames in parallel relationship on the shafts. Each side frame **18** has two legs **20***a* and **20***b* defining support surfaces **20***c* and **20***d* respectively at right angles to each other, and a semi-cylindrical support surface **20***e*, which extends along the outer surfaces of legs **20***a* and **20***b*.

Support plates **30** and **32** are secured to, and form a bed or platen on the two support surfaces **20***c* of legs **20***a*. Mounted on the two support surfaces **20***d* (shown in a vertical position in FIG. **1**) of the semicircular supporting side frame pairs **18** are two support plates **42**, **44**, forming a V-top bed for supporting the curved surface of a coil C, as shown in FIG. **1**, with its axis A vertical, which may, for example, be strip steel, paper, cable, or other heavy material.

The supporting structure **14** consists of a foundation **46**, two spaced elongate track supports **48** and **49** secured to the foundation, and two cradle tracks **50** which are secured to the supports **48** and **49** respectively and provide generally straight metal horizontal surfaces on which the cradle can roll. At each end of the track supports are mounted stop blocks **52**, **53**, **54** and **55**. The stop blocks are formed structurally of steel with an upper surface of shock cushioning material to act as an abutment for the cradle in the loading position (FIG. **3**) and in the unloading position (FIG. **5**).

In the enlarged sectional view FIG. **2**, it will be noted that each cradle track **50** has two upwardly projecting portions **50***a* that define rails to receive depending track sections **51** of the cradle side frames **18***a* and **18***b*. A guide bar **56**, which extends longitudinally along the

track **50** is secured in a slot **57** in the track by capscrews **56***a* and is straddled by the frame members **18***a* and **18***b* to prevent shifting or sidewise creeping of the cradle off the track.

The outer edges of the side frame members **18***a* and **18***b* and the outer edge portions of the cradle tracks **50** (FIG. 2) form grooves **58***a* and **59***a* which receive cradle restraints **58** and **59.** The cradle restraints **58** and **59,** as shown in FIGS. **1** and **2,** are flexible members such as chains, as illustrated, or cables which prevent torsional creep of the cradle with respect to the cradle track during the roll-over operation or resist such creep resulting from coil shock when transferring coils into and out of the cradle. The cradle restraint **59** is associated with the cradle frame segment **18***b* and is attached to a cradle restraint takeup **62** (FIG. **1**) which in turn is attached to the stop blocks **52, 54.** The other end of the cradle restraint **59** is attached to a plate **60** which extends transversely across the ends of the semicircular supporting side frame sections **18***a* and **18***b.* The cradle restraint **58** is attached first to a cradle restraint takeup **63** which in turn is attached to the stop blocks **53, 55.** The other end of the cradle restraint **58** is attached to a plate **61** which extends between the members **18***a* and **18***b.* The chain **58** rests in the groove **58***a* as shown in FIG. **2,** and the chain **59** rests in the groove **59***a.* The restraint chains **58** and **59** associated with the cradle that rolls on track support **48** are also connected respectively between a cradle restraint takeup **63** and a transverse plate **61** (FIG. **1**), and between a cradle restraint takeup **62** and a transverse plate **60.** As the cradle moves toward the right, tension on the two outside chains **58** keeps the cradle from sliding or creeping to the left while it is rolling or while it is stationary but under impact loadings. And similarly, tension on the two inner chains **59** restrains the cradle from creeping to the right.

The drive system utilized is a hydraulic cylinder and lever drive as illustrated in the sequence of FIGS. **3, 4** and **5.** In FIG. **3** the drive system includes a pivot shaft **188** connected to the cradle **12.** The outer end of the pivot shaft **188** is journaled for rotation in the upper end of the cradle link **190.** The cradle link **190** is connected for rotation at its lower end (FIG. **3**) to drive, or bell crank, lever **192.** The drive lever is pivotally connected and journaled for rotation on a pivot shaft **193** which is connected to the track support **49.** The lower end of the drive lever **192** is pivotally connected to the piston **196** of the double acting hydraulic cylinder **197.** The opposite end of the hydraulic cylinder **197** is connected for pivotal movement in a trunion **198** that is attached to the foundation. This drive system consisting of interconnected lever arms and a pivotally mounted hydraulic cylinder can be mounted on either side of the cradle or in the open center of the cradle between the tracks.

In operation, the coil is placed on the horizontal bed or support surface **30, 32** of the cradle **12** when in the position shown in FIG. **3** at the initial loading position. Pressure is applied to the double acting hydraulic cylinder **197** and the piston **196** of the cylinder is extended to the left, rotating the drive lever **192** clockwise about its pivot point **193,** and, as a consequence, rolling the cradle clockwise and to the right along its tracks as shown in the sequence of FIGS. **3, 4** and **5.** As the cradle nears the end of 90° of rotation, limit switches (not shown) are tripped and further extension of the piston **196** of the hydraulic cylinder **197** is discontinued. A brake (not shown) is applied and the cradle is then unloaded as the coil, which has had its axis revolved through 90°, is removed by conveyor, crane, or by other means. The brake is released and pressure is then applied to the double acting hydraulic cylinder **197** in a direction opposite that of the original pressure application and the piston of the cylinder is withdrawn to the right to rotate the drive lever **192** in a counterclockwise direction and to rotate and shift the cradle in turn 90° from its position as shown in FIG. **5** to the initial position of FIG. **3.** Limit switches are again activated and further withdrawal of the piston into the hydraulic cylinder is stopped. A brake is then applied holding the cradle in the position with platen **30, 32** oriented horizontally.

The bed **30, 32,** when in the horizontal position, (FIG. **3**) is spaced below the center CR of the circular arc defined by surface **20***e* of the arcuate segments of the cradle a distance D equal to the distance from the bottom of the coil to the center of gravity G of the coil (a distance equal generally to about one-half the height H of the coil). Similarly, the bed **42,44,** when in the horizontal position (FIG. **5**), is spaced below the center CR of the arc of the arcuate segments of the cradle a distance S equal to or greater than the distance from the side of the coil to the center of gravity of the coil. With this construction the center of gravity G of the coil C when upright will initially lie at the center CR of the circular arc of the arcuate segments. Thus as the cradle is rolled, the center of gravity of the coil will not have to be raised, but will be moved laterally as the cradle rolls.

When the cradle is in the final position (FIG. **5**), the center of gravity of the coil is at (as shown) or below the center of the circular arc of the arcuate segments. If the coil should have a diameter closely approximating the height of the coil as shown, the center of gravity of the coil will remain at or near the moving center CR as the cradle rolls. FIGS. **3, 4** and **5** illustrate the case of a coil having equal height and diameter. As the cradle rolls the center of gravity G of the coil C coincides with a line L along which the center CR of the circular arc of the arcuate segments moves throughout the entire downending operation.

Although the best mode contemplated for carrying out the present invention has been herein shown and described, it will be apparent that modification and variation may be made without departing from what is regarded to be the subject matter of the invention.

What is claimed is:

1. An article roll-over device comprising, in combination, a cradle having two adjacent angularly spaced beds to support an article, said cradle having an edge support surface defining a semi-circular arc, the center of said arc lying substantially above and between said beds to hold the article with the center of gravity of the article close to the center of said arc, supporting means including a horizontal track to receive the arcuate edge support surface of the cradle for rolling movement, and a drive mechanism including a power cylinder pivotally attached to a fixed support and having a piston and a piston rod, a bell crank lever pivotally mounted on said supporting means and connected at one end to the piston rod, and a link connected between the other end of the bell crank lever and the cradle, said drive mechanism rolling said cradle as the power cylinder is oper-

ated from a first position with one bed in a substantially horizontal position to support the article to a second position with the other bed in a substantially horizontal position to support the article, said horizontal positions of the beds below the center of said semi-circular arc to maintain the center of gravity of the article in substantially the same plane as the cradle rolls on said track.

2. An article roll-over device comprising in combination, a cradle having two angularly spaced beds secured in fixed relation to the cradle to support an article, said cradle further having an arcuate edge support surface, said beds located below the center of curvature of the arcuate edge support surface to hold the article with the center of gravity thereof close to the center of curvature of the arcuate edge support surface, supporting means including track means to receive the arcuate edge support surface for rocking movement of the cradle thereon, and a drive mechanism including a hydraulic power cylinder having a piston and piston rod and including a linkage system connecting the piston rod to said cradle for rocking the cradle on the track means to simultaneously axially reorient and laterally transfer the article from a position on one bed to a second position on the other bed with a minimum change in the center of gravity of the article as the cradle rocks on said track means, said linkage system including a bell crank lever pivotally connected at one end to the piston rod of said hydraulic cylinder.

3. The mechanism of claim 2 in which a cradle link is pivotally connected between the cradle and the bell crank lever.

4. The mechanism of claim 3 in which the hydraulic cylinder and the bell crank lever are pivotally connected to a fixed support.

* * * * *