No. 688,638

Patented Dec. 10, 1901.

A. M. HAMILTON.

LOOM FOR WEAVING BORDERED FABRICS.

(Application filed May 7, 1898.)

(No Model.)

6 Sheets—Sheet 1.

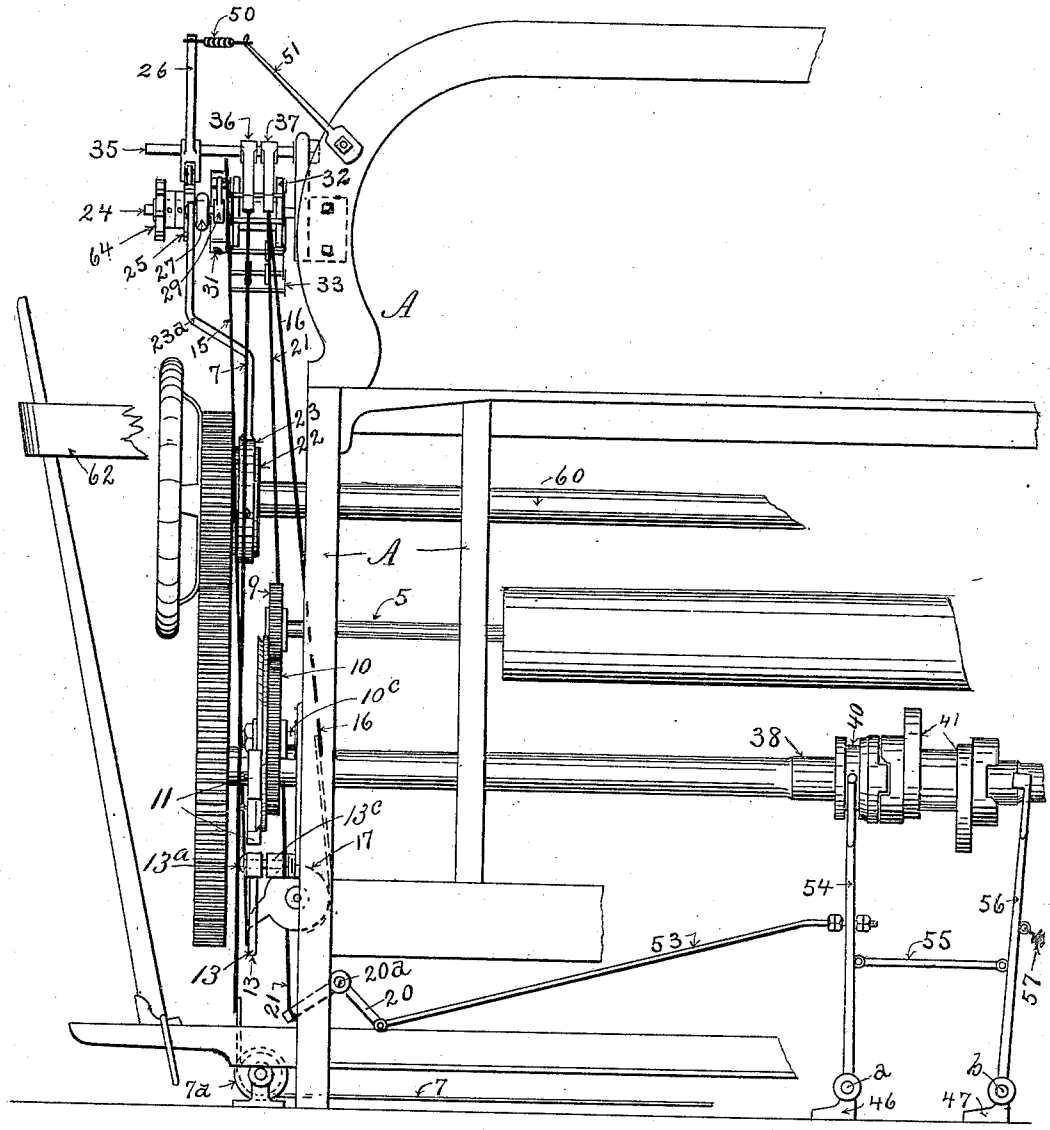

FIG. 1.

Witnesses.
M. A. M. Frayser.
W. E. Allen.

Inventor:
Arthur M. Hamilton
per
E. B. Clark
Attorney.

THE NORRIS PETERS CO., PHOTO-LITHO., WASHINGTON, D. C.

No. 688,638. Patented Dec. 10, 1901.

A. M. HAMILTON.

LOOM FOR WEAVING BORDERED FABRICS.

(Application filed May 7, 1898.)

(No Model.) 6 Sheets—Sheet 2.

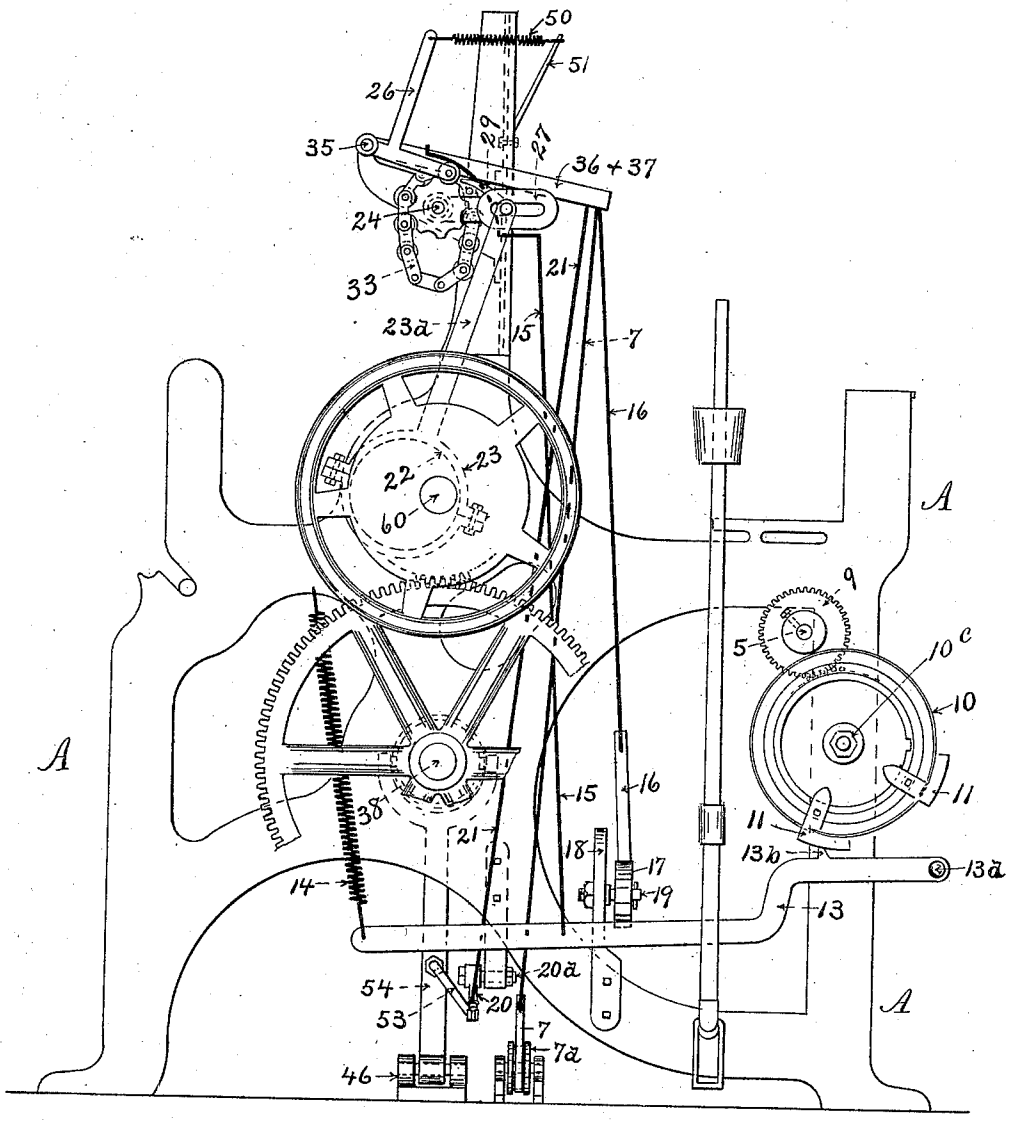

FIG. 2.

Witnesses.
M. R. M. Frasser.
W. E. Allen.

Inventor.
Arthur M. Hamilton
per E. B. Clark
Attorney.

THE NORRIS PETERS CO., PHOTO-LITHO., WASHINGTON, D. C.

No. 688,638. Patented Dec. 10, 1901.

A. M. HAMILTON.

LOOM FOR WEAVING BORDERED FABRICS.

(Application filed May 7, 1898.)

(No Model.) 6 Sheets—Sheet 3.

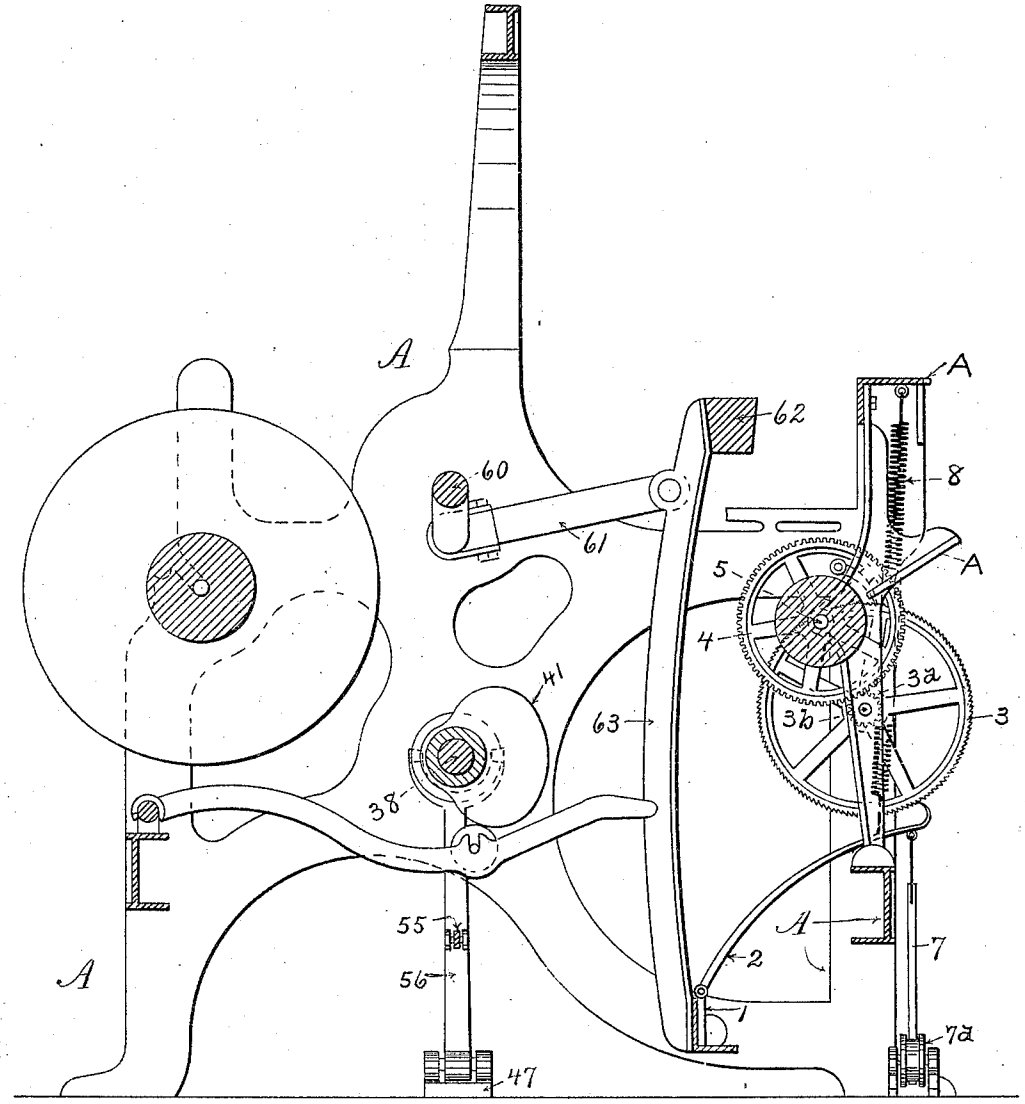

FIG. 3.

Witnesses.
M. R. M. Traynor.
W. E. Allen

Inventor.
Arthur M. Hamilton
per
E. B. Clark
Attorney.

THE NORRIS PETERS CO., PHOTO-LITHO., WASHINGTON, D. C.

No. 688,638. Patented Dec. 10, 1901.

A. M. HAMILTON.

LOOM FOR WEAVING BORDERED FABRICS.

(Application filed May 7, 1898.)

(No Model.) 6 Sheets—Sheet 4.

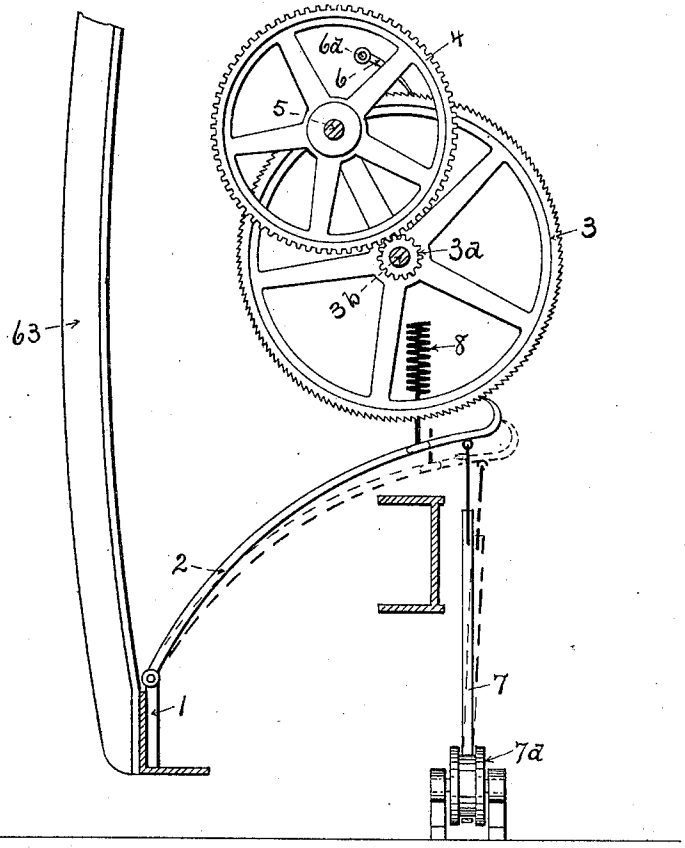

FIG. 4

Witnesses.
M. A. M. Frayser.
W. E. Allen

Inventor.
Arthur M. Hamilton
per E. B. Clark
Attorney.

THE NORRIS PETERS CO., PHOTO-LITHO., WASHINGTON, D. C.

No. 688,638. Patented Dec. 10, 1901.

A. M. HAMILTON.

LOOM FOR WEAVING BORDERED FABRICS.

(Application filed May 7, 1898.)

(No Model.) 6 Sheets—Sheet 5.

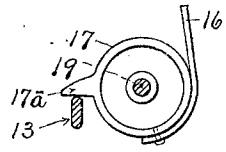

FIG. 7.

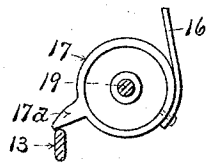

FIG. 8.

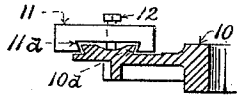

FIG. 9.

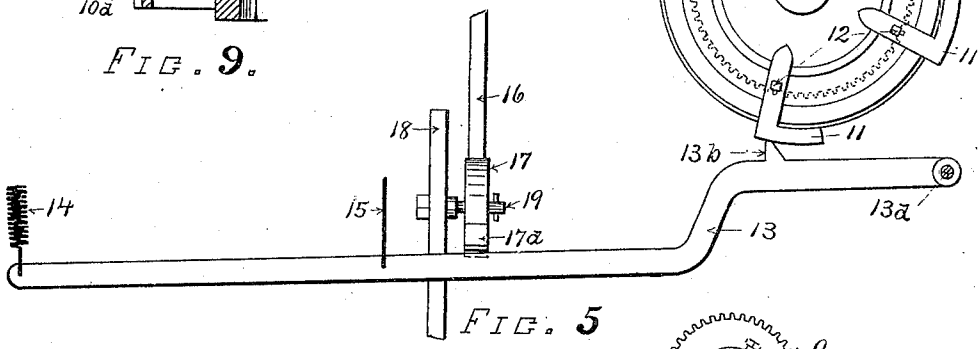

FIG. 5.

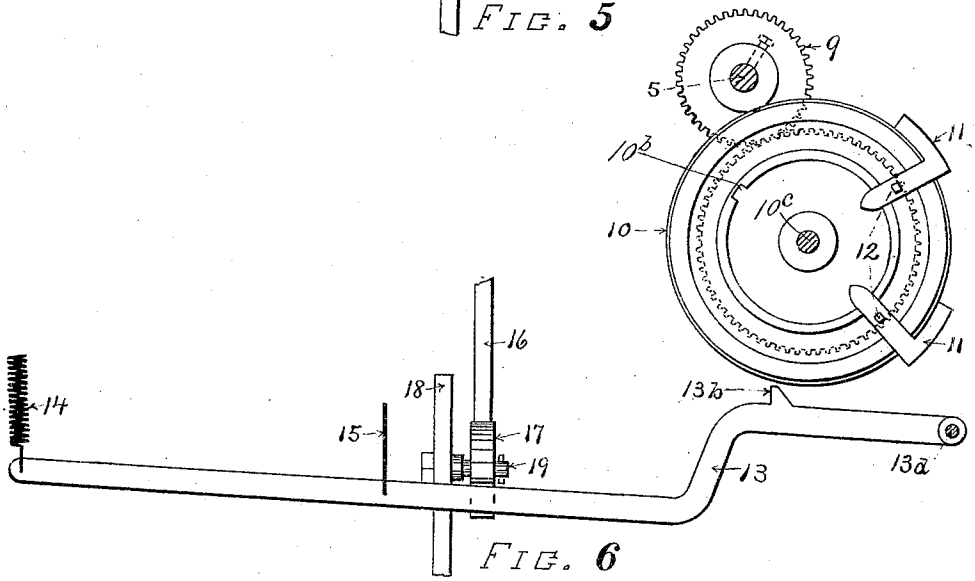

FIG. 6.

Witnesses.
M. R. M. Frayser.
W. E. Allen.

Inventor.
Arthur M. Hamilton
per E. B. Clark
Attorney

THE NORRIS PETERS CO., PHOTO-LITHO., WASHINGTON, D. C.

No. 688,638. Patented Dec. 10, 1901.

A. M. HAMILTON.

LOOM FOR WEAVING BORDERED FABRICS.

(Application filed May 7, 1898.)

(No Model.) 6 Sheets—Sheet 6.

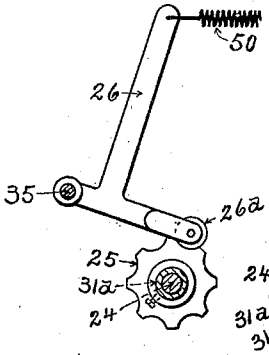

FIG. 10

FIG. 12

FIG. 11

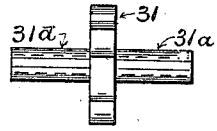

FIG. 14

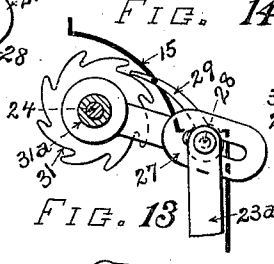

FIG. 13

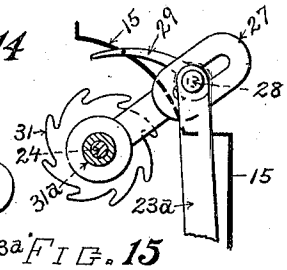

FIG. 15

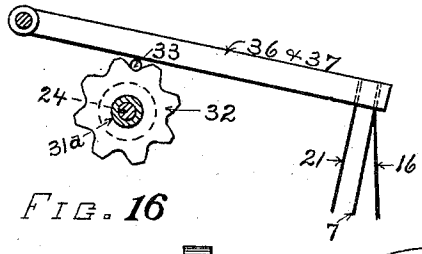

FIG. 16

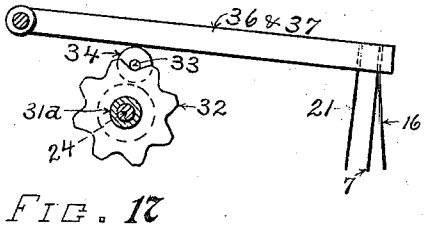

FIG. 17

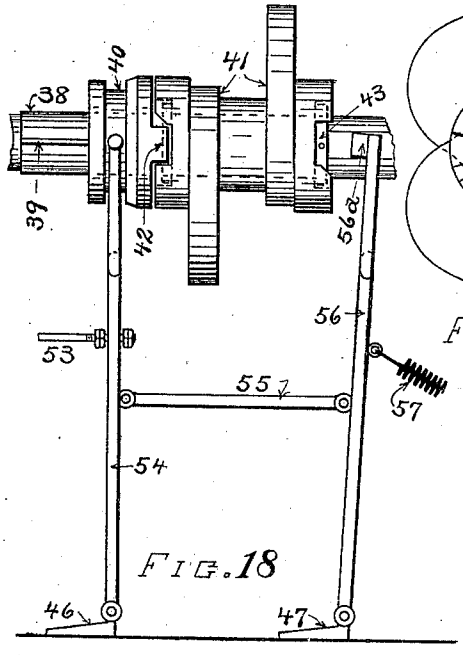

FIG. 18

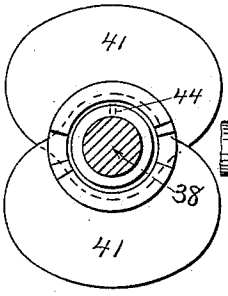

FIG. 20

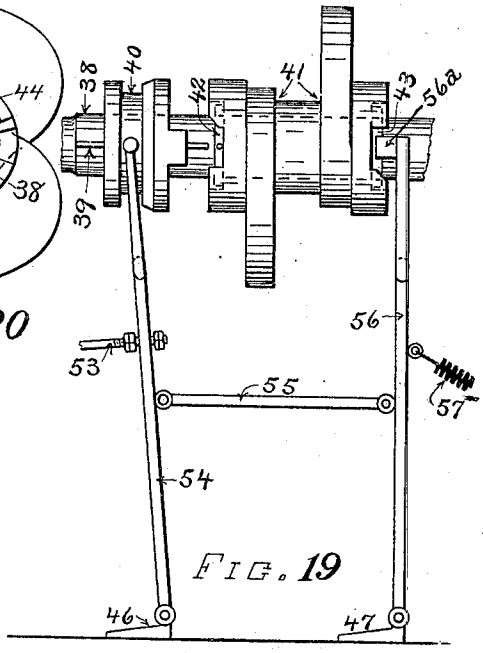

FIG. 19

Witnesses.

M. R. M. Frazer.

W. E. Allen.

Inventor.

Arthur M. Hamilton

per

E. B. Clark

Attorney.

THE NORRIS PETERS CO., PHOTO-LITHO., WASHINGTON, D. C.

UNITED STATES PATENT OFFICE.

ARTHUR M. HAMILTON, OF FALL RIVER, MASSACHUSETTS, ASSIGNOR TO PARKER MILLS, OF FALL RIVER, MASSACHUSETTS, A CORPORATION OF MASSACHUSETTS.

LOOM FOR WEAVING BORDERED FABRICS.

SPECIFICATION forming part of Letters Patent No. 688,638, dated December 10, 1901.

Application filed May 7, 1898. Serial No. 680,030. (No model.)

To all whom it may concern:

Be it known that I, ARTHUR M. HAMILTON, a citizen of the United States, residing at Fall River, in the county of Bristol and State of Massachusetts, have invented certain new and useful Improvements in Looms for Weaving Bordered Fabrics; and I do hereby declare the following to be a full, clear, and exact description of the invention, such as will enable others skilled in the art to which it appertains to make and use the same.

This invention relates to certain new and useful mechanism applied to looms for weaving cords in fabrics for making check goods or handkerchiefs with corded borders. Such goods have heretofore been woven on a loom having a dobby-head, the ordinary pattern-chain, and other attachments, which make the mechanism expensive as to first cost and also comparatively expensive in operation.

The object of my invention is to do away with the dobby-head and provide mechanism at a greatly-reduced cost which will effectively operate to weave a corded border in a handkerchief or cords throughout the whole fabric to make check goods; also, to enable the operator or attendant to weave a given number of yards of fabric with less expenditure of time and labor than would be required in the use of the dobby-head.

My invention comprises certain improved devices and mechanism for controlling the shedding of the warp-threads and also for regulating the take-up motion, the shedding mechanism and take-up motion being synchronously operated, stopped, or started for producing the desired corded border or corded effect throughout the fabric in the manufacture of check goods.

The matter constituting my invention will be defined in the claims.

I will now describe the details of construction and arrangement of the best embodiment of my mechanism by reference to the accompanying drawings, in which—

Figure 1 represents a front elevation of part of a loom containing my devices. Fig. 2 represents an end elevation thereof. Fig. 3 represents a transverse sectional elevation showing part of the take-up mechanism not shown in Fig. 1. Fig. 4 represents a sectional detail view, on enlarged scale, of the mechanism of the take-up motion. Figs. 5 and 6 represent elevations of certain devices at the left-hand end of the loom. Figs. 7 and 8 show certain detail views of parts shown in Figs. 5 and 6. Fig. 9 represents a transverse section through part of the disk-gear shown in Figs. 5 and 6. Figs. 10 to 17, inclusive, represent detached detail views of the pattern-chain mechanism. Figs. 18, 19, and 20 represent detail views of the cams on the cam-shaft and operating mechanism therefor.

The mechanism of the take-up motion at the right-hand end of the loom is shown in Figs. 3 and 4 and is operated in the usual manner from the crank-shaft 60, which is connected by link 61 to the lay-sword 63, which supports the lay 62.

The take-up pawl 2 is hinged to a bracket 1, which is bolted to the lower end of the lay-sword and engages at its outer hooked end with the ratchet-wheel 3, which, together with a spur-gear or pinion 3^a, is mounted on the stud-shaft 3^b, secured to the loom-frame A. The pinion 3^a meshes with the spur-wheel 4, mounted on shaft 5 of the cloth-roll, which is journaled in the usual manner in the frame A. A pawl 6, pivoted to a pin or stud 6^a, secured to the frame, engages with the teeth on the ratchet-wheel 3 to prevent it from running backward.

The pawl 2 is ordinarily held in engagement with the teeth of wheel 3 by means of spiral spring 8, attached at one end to the pawl and at the other end to the frame A.

When it is desired to put more than one pick into the fabric, as when a cord is made, the gearing of the take-up motion is stopped by means of strap 7, attached to pawl 2 and passing down under pulleys 7^a and thence up to the lifting-lever 36 in the pattern-chain mechanism. At the proper moment lever 36 is lifted by one of the balls in the pattern-chain, thus pulling on strap 7 and holding pawl 2 away from the teeth in wheel 3.

I will now describe the devices at the left-hand end of the machine for bringing into

operation the pattern mechanism, which by means of suitable connections operate a clutch to engage or disengage the cams on the cam-shaft, which operate the harnesses, so that when the cams are held in a fixed position and the harnesses at rest the required number of picks may be put in to form a cord, as determined by the position of the balls in the pattern-chain.

At the left-hand end of the loom there is secured to the end of shaft 5 a toothed gear 9, which meshes with the disk gear 10, Figs. 5 and 6, supported on a stud-shaft 10^c, projecting from the frame A, as shown in Fig. 1. The disk gear 10 is provided at the outer side near the periphery with a circular dovetail projection 10^a, as shown in Fig. 9, and such projection is provided with an interior notch 10^b, as shown in Figs. 5 and 6. The dogs 11, having transverse dovetail grooves 11^a, are inserted at the notch 10^b onto the dovetail projection 10^a, and may be adjusted thereon in any desired position and held in place by the screws 12, bearing upon the face of the projection 10^a, as shown in Fig. 7. By means of the dovetail joint, made as above described, the dogs may be readily adjusted in any desired position on disk gear 10 and serve to regulate the length of the pattern in the fabric. Below the disk gear 10, Figs. 2, 5, and 6, the bent lever 13 is pivotally connected by pin 13^a to a lug or bracket 13^c on the frame, and to its opposite end is attached a spiral spring 14, Fig. 2, which is also attached to the frame for supporting the lever in the desired position. Lever 13 is also provided with an upwardly-projecting horn 13^b, which in practice is engaged by the dog 11 for depressing the lever, as in Fig. 5. When one of the dogs 11 passes off from horn 13^b, the lever is again raised by spring 14. A wire 15 connects at its lower end with lever 13 and extends up to the pattern mechanism, where it connects with pawl 29, Figs. 11, 12, 13, and 15, for lowering said pawl to engage with the teeth of ratchet-wheel 31 when the lever 13 is lowered or raising said pawl to disengage it from the teeth of said wheel when the lever 13 is raised. Near the outer end of pawl 29 is connected an eye 30, Fig. 12, through which passes wire 15. The pawl is thus caused to engage with and slide on the wire when it is raised and lowered, as illustrated in Figs. 13 and 15.

I will now describe the mechanism for driving the pattern-chain, and thereby operating certain lifting-levers 36 and 37, by means of which the take-up motion may be thrown out of gear and also the cams which operate the harnesses may at the same time be thrown out of gear, so that the take-up motion and the shedding operations may be temporarily stopped while the desired number of picks are put in to form a cord in the fabric.

Referring now to Figs. 1 and 2 and the detail views, Figs. 10 to 17, inclusive, the ratchet-wheel 31 is provided with a long barrel or sleeve-shaft 31^a, which is mounted upon a stud-shaft 24, secured to a bracket at the top of the loom-frame, and to such sleeve-shaft there are secured by set-screws the notched pattern-wheels 32 for the pattern-chain 33. A slotted arm 27 is loosely connected with sleeve-shaft 31^a, so as to freely turn thereon, for connection with the driving-rod 23^a. A check-wheel 25 is also secured by set-screws on sleeve-shaft 31^a. To the left-hand end of the crank-shaft 60 is secured an eccentric 22, around which passes strap or ring 23, having connected with it the connecting or driving rod 23^a, which at its upper end connects by a pin 28 with the slotted arm 27. The pawl 29 is also pivotally connected by said pin 28, so that its free end may engage the teeth of ratchet-wheel 31. Motion imparted to the driving-rod 23^a by the eccentric causes the arm 27 to move in the arc of a circle around ratchet-wheel 31 and when the pawl 29 is in engagement with the teeth thereof to partially revolve said wheel at every upward stroke of rod 23^a. Since the notched pattern-wheels 32 are secured to the sleeve-shaft 31^a, they are turned with the ratchet-wheel and carry forward pattern-chain 33 with its balls 34. The lifting-levers 36 and 37 are pivotally connected at their rear ends to a stud-shaft 35, projecting from a bracket on the frame, and rest in an inclined position upon the chain above the pattern-wheels 32, as clearly shown in Figs. 16 and 17. A bent lever 26, Fig. 10, is also connected to shaft 35 and is provided at its inner end with a roller 26^a, adapted to bear in the notches of the check-wheel 25, and is connected at its outer end by means of a spiral spring 50 to an arm 51, secured to the frame. The spring 50 presses the roller 26^a into a notch of wheel 25, so as to hold the wheels which are attached to the sleeve-shafts 31 from revolving, except when the ratchet-wheel is caused to revolve by engagement of pawl 29. An adjusting-wheel 64, Fig. 1, similar in shape to the check-wheel, is also secured to the sleeve-shaft 31^a and is used to turn the pattern mechanism by hand when adjusting it.

To the inner end of lever 37 is connected a wire 21, which connects at its lower end with the bell-crank 20 on pin 20^a, which connects at its other end by means of rod 53 with the clutch-lever 54 for operating the clutch on the cam-shaft, as shown in the detail views, Figs. 18 and 19.

The cams 41 are loosely mounted on the cam-shaft 38 and are held in position by the collars 42 and 43, and said cams are suitably notched for engagement with the clutch 40 and the catch 56^a. The clutch 40 is connected with the cam-shaft by means of a feather or spline 39. The clutch-lever 54 and the catch-lever 56 are pivotally connected at *a* and *b* to the feet or floor brackets 46 and 47, and said levers are pivotally connected one to the

other by the link 55. A spiral spring 57 connects with the catch-lever 56 and also with the floor or base plate of the loom for pulling catch 56^a of said lever out of engagement with the cam and at the same time moving the clutch-lever 54 and the clutch 40 into engagement with the cam, as shown in Fig. 18. As heretofore explained, the strap 7, which connects with the take-up pawl 2 and passes below pulleys 7^a, connects with the outer end of lever 36. It will be evident, therefore, that when levers 36 and 37 are raised by balls in the pattern-chain passing over the notched wheels 32, the take-up pawl 2 will be drawn away from ratchet-wheel 3, thus stopping the take-up motion, and at the same time the clutch 40 will be drawn away from engagement with the cams 41, thus stopping the harnesses and the shedding operations. At this time the desired number of picks are put into the fabric to form the desired cord.

The operation of my devices is very simple and practically automatic, so that no extra labor or time is required of the attendant for operating the loom to weave a bordered fabric. Before commencing the weaving operations the balls will be properly placed in the pattern-chain to produce the desired corded border. The dogs 11 are also secured in the desired position to the disk gear 10 to act at the intervals of time for bringing the pattern chain and mechanism into operation to produce the desired corded border. The number of dogs 11 and their relative positions on the disk gear 10 may be varied according to the variety or style of corded border desired. When one of the dogs 11 passes into contact with the horn 13^b, the lever 13 will be depressed, thereby pulling down the wire or rod 15 and engaging pawl 29 with the teeth of the ratchet-wheel 31. The eccentric 22 being in continuous operation and its driving-rod 23^a in connection with the arm 27, the ratchet-wheel 31 will now be revolved, causing simultaneous revolution of the notched pattern-wheels 32 and continuous movement of the pattern-chain 33. When the balls 34 of the pattern-chain pass over the wheels, they will raise the levers 36 and 37, causing the strap 7 to pull down the take-up pawl 2 and the wire 21 to disengage clutch 40 from the cams 41, thus stopping the mechanism of the take-up motion and the harnesses while the desired number of picks are put into the fabric to make the desired cord. When the dog 11 passes off from horn 13^b, lever 13 will again be pulled up by its spring 14, thereby raising the rod or wire 15 and lifting pawl 29 out of engagement with the ratchet-wheel 31, as shown in Fig. 15, thus stopping the motion of the pattern mechanism. So soon as the balls 34 pass of from the pattern-wheels 32, levers 36 and 37 will drop onto the chain, as shown in Fig. 16, and the straps 7 will be released, permitting take-up pawl 2 to be again pulled by spring 8 into engagement with the ratchet-wheel 3, and wire 21 will be lowered, permitting the clutch 40 to be pulled by spring 57 into engagement with the cams, so that plain weaving of the fabric is again resumed. When clutch 40 is pulled out of engagement with the cams 41, as above described, the catch 56^a is at the same time pulled into engagement with the cams for preventing them from turning out of their proper position.

In order to prevent the driving mechanism which runs the pattern-chain from stopping on a ball, thus holding the shed open when not desired, I provide a safety device, consisting of a safety-motion wheel 17, Figs. 5, 6, 7, and 8, mounted on pin 19, held by bracket 18 and connecting by a strap 16 with lever 37.

The wheel 17 is provided at its periphery with a horn 17^a, adapted to bear upon lever 13, as shown in Figs. 7 and 8. A ball of the pattern-chain being on wheel 32 it holds lever 37 in the raised position, and thereby the strap 16, attached to said lever, will pull upon wheel 17, causing its horn 17^a to bear upon lever 13 and hold it down, as shown in Fig. 8, until the said ball has passed off from wheel 32. Evidently this safety mechanism will thus act to keep the pattern-wheels in motion till the balls have passed off from them, even though the dog 11 has passed off from horn 13^b of lever 13.

Motion may be taken from the cam-shaft instead of the crank-shaft to drive the pattern mechanism, but in this case the control is limited to two picks to each revolution.

Having described my invention, what I claim, and desire to secure by Letters Patent, is—

1. The combination with the pattern mechanism, of pivoted lifting-levers adapted to be raised by the pattern mechanism, the take-up motion, the harness-cams, and connections from each of these parts to said lifting-levers for simultaneously stopping the take-up motion and cams, substantially as described.

2. The combination with the pattern mechanism, of pivoted lifting-levers, the cam-shaft and harness-cams, a sliding clutch adapted to engage the cams, the take-up motion including a ratchet-wheel, a pawl engaging said wheel, a rod and connection from one of said levers to said clutch and a strap from one of the levers connecting with said pawl, substantially as described.

3. The combination with the pattern mechanism, including a ratchet-wheel, of pivoted lifting-levers, devices for operating said mechanism, including a pivoted pawl, means for automatically engaging said pawl with, and disengaging it from said ratchet-wheel, the take-up motion including a ratchet-wheel, an engaging pawl therefor, the cam-shaft, cams and clutch and connections from said lifting-levers to said take-up pawl and to the clutch, substantially as described.

4. The combination with the pattern mechanism, including a ratchet-wheel, of pivoted lifting-levers, the take-up motion including a ratchet-wheel and a pawl engaging therewith, the cam-shaft having cams and a clutch, suitable connections from said pawl and clutch to said lifting-levers, a pivoted lever, as 13, a pawl 29, a connection between said lever and pawl 29 for causing the latter to engage with the ratchet-wheel in the pattern mechanism or to be disengaged therefrom, and operating mechanism for the lever 13, substantially as described.

5. The combination with the pattern mechanism and operating devices, including a ratchet-wheel and a pawl, adapted to engage therewith, of pivoted lifting-levers, the take-up mechanism, including a ratchet-wheel and pawl, the cam-shaft having cams and a clutch, connections from said levers to said take-up pawl and clutch, a disk gear provided with dogs, actuating means therefor, a pivoted lever adapted to be depressed by said dogs and a connection from said lever to said pawl in the pattern mechanism, substantially as described.

6. The combination with the cam-shaft, the harness-cams and a sliding clutch on the shaft, of the pattern mechanism, including the pattern wheel and chain and means for operating the same, a pivoted lifting-lever resting on said chain and a rod-and-crank connection from said lever to the clutch on said cam-shaft, whereby said clutch may be disengaged from the cams to stop the shedding operation, substantially as described.

7. The combination with a disk gear provided with an adjustable dog at its periphery, of a pivoted lever 13, supported by a spring 14, and adapted to be engaged by said dog for depressing it, and to be raised by said spring, the pattern mechanism, devices including a ratchet-wheel, and a pawl to engage said ratchet-wheel for driving said mechanism, and a wire or rod connecting said lever with said pawl for engaging it with said ratchet-wheel, or disengaging it therefrom according as the lever is raised or lowered, substantially as described.

8. The combination with a pivoted lever, as 13, and a supporting-spring 14, of the pattern mechanism, devices including a ratchet-wheel, and a pawl to engage said ratchet-wheel for driving said mechanism, a rod connecting said lever 13, with said pawl, and means for depressing said lever 13, to cause the pawl to engage said ratchet-wheel, substantially as described.

9. In a loom for weaving bordered or corded fabrics, the combination with the take-up motion and the shedding mechanism, of the pattern wheel and chain, pivoted levers and connections from said levers for throwing said take-up motion and shedding mechanism out of gear while the pattern is being woven, substantially as described.

10. In a loom for weaving bordered or corded fabrics, the combination with the take-up motion and the shedding mechanism, of the pattern mechanism and connections between such parts for throwing the take-up motion and shedding mechanism out of gear for producing the desired pattern, substantially as described.

11. The combination with the pattern mechanism, including a pattern-chain and means for operating it, of a pivoted lifting-lever adapted to be raised by balls on said chain, a pivoted lever, as 13, a safety-wheel, having a peripheral horn, adapted to bear on said lever and a connection from said wheel to said lifting-lever and suitable operating mechanism, substantially as described.

12. The combination with the pattern mechanism embracing a ratchet-wheel, pattern wheel and chain, of a pivoted lifting-lever adapted to bear on a ball of said chain, a pivoted pawl for engaging said ratchet-wheel, a pivoted lever, as 13, a rod connecting said lever with said pawl, a wheel having a peripheral horn, adapted to bear on said pivoted lever, and a strap connecting said wheel with said lifting-lever, substantially as described.

13. The pattern mechanism and driving mechanism therefor, including a ratchet-wheel and a pawl, adapted to engage therewith, in combination with a disk gear, having a circular dovetail projection, one or more adjustable dogs secured thereto, and connections between said pawl and the disk gear, adapted to be operated by said dogs, for throwing the pattern mechanism into or out of operation, substantially as described.

14. In a loom, the harness, means for operating the harness, a harness stop-motion device, a pattern, means controlled by the pattern for moving the harness stop-motion device, means for operating the pattern, a pattern stop-motion device, means controlled by the pattern for moving the pattern stop-motion device, a cloth-roll, means for operating the cloth-roll, a cloth-roll stop-motion device, and means controlled by the pattern for moving the cloth-roll stop-motion device.

15. In a loom, the combination of a harness, a shaft, a driving connection from the shaft to the harness for actuating the latter; said connection comprising a harness stop-motion device, a pattern, suitable means controlled by the pattern for moving the harness stop-motion device and causing the harness to dwell, and mechanism intermediate of the shaft and the pattern for operating the pattern; said mechanism comprising a pattern stop-motion device controlled by the pattern through the medium of mechanism interposed between it and said pattern.

16. In a loom, the harness, means for operating the harness, a harness stop-motion device, a pattern, means controlled by the pattern for moving the harness stop-motion device, means for operating the pattern, a pat-

tern stop-motion device, and means controlled by the pattern, for moving the pattern stop-motion device.

17. In a loom, the harness, means for operating the harness, a harness stop-motion device, a pattern, means controlled by the pattern for moving the harness stop-motion device, means for operating the pattern, a pattern stop-motion device, means for taking up the cloth as it is woven, and means operated by the take-up means for releasing the pattern stop-motion device.

In testimony whereof I affix my signature in presence of two witnesses.

ARTHUR M. HAMILTON.

Witnesses:

ANDREW SCOTT,

JOHN M. YOUNG.