United States Patent [19]

Pike

[11] **3,807,118**

[45] **Apr. 30, 1974**

[54] **METHOD OF FORMING A PACKAGE**

[75] Inventor: **Brian R. Pike,** Monterey Park, Calif.

[73] Assignees: **William S. Schneider,** Glendale; **Carl F. Schneider,** Palos Verdes Peninsula; **V. Wayne Rodgers,** South Pasadena, all of, Calif. ; part interest to each

[22] Filed: **Mar. 31, 1972**

[21] Appl. No.: **240,207**

[52] **U.S. Cl.** ..... **53/14,** 53/28, 53/29, 93/35 R

[51] **Int. Cl.** **B65b 9/08,** B65b 9/10, B65b 61/18

[58] **Field of Search** ..... 53/14, 28, 180, 182, 29; 93/8 VB, 8 WA, 35 R, 35 PC

[56] **References Cited**

UNITED STATES PATENTS

2,984,958	5/1961	Wainwright	53/180 X
3,210,907	11/1965	Thurlings	53/180
3,279,330	10/1966	Harding	93/8 VB
3,596,428	8/1971	Young et al.	53/180 X

Primary Examiner—Robert L. Spruill

Attorney, Agent, or Firm—Diller, Brown, Ramik & Wight

[57] **ABSTRACT**

This relates to a package which is primarily intended to have a first product incorporated therein in the forming of the container portion of the package, with the container including a valved passage through which a second product may be added to the package. The package is formed with two walls and is of a construction wherein it may be formed on a continuous basis utilizing major web material, which defines the two walls of the packages, and minor web portions. The package forming operation may be either a horizontal operation or a vertical operation. The minor web portions are first sealed to one of the walls to define a plurality of adjacent valved passages, after which the two wall portions are superimposed with respect to valve passages and said minor web portions disposed therebetween, followed by formation of transverse seals to define packages each having a valved passage at one end thereof.

24 Claims, 17 Drawing Figures

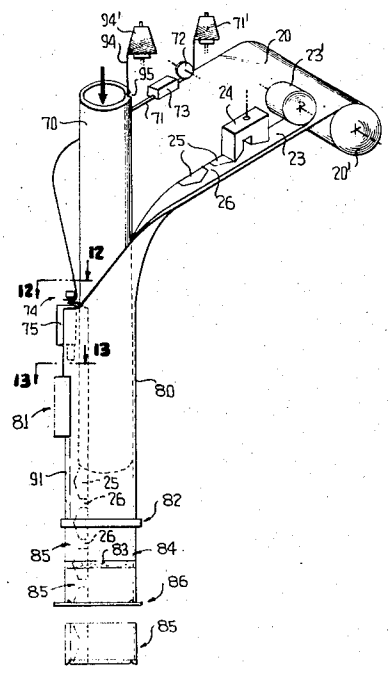

FIG. 1

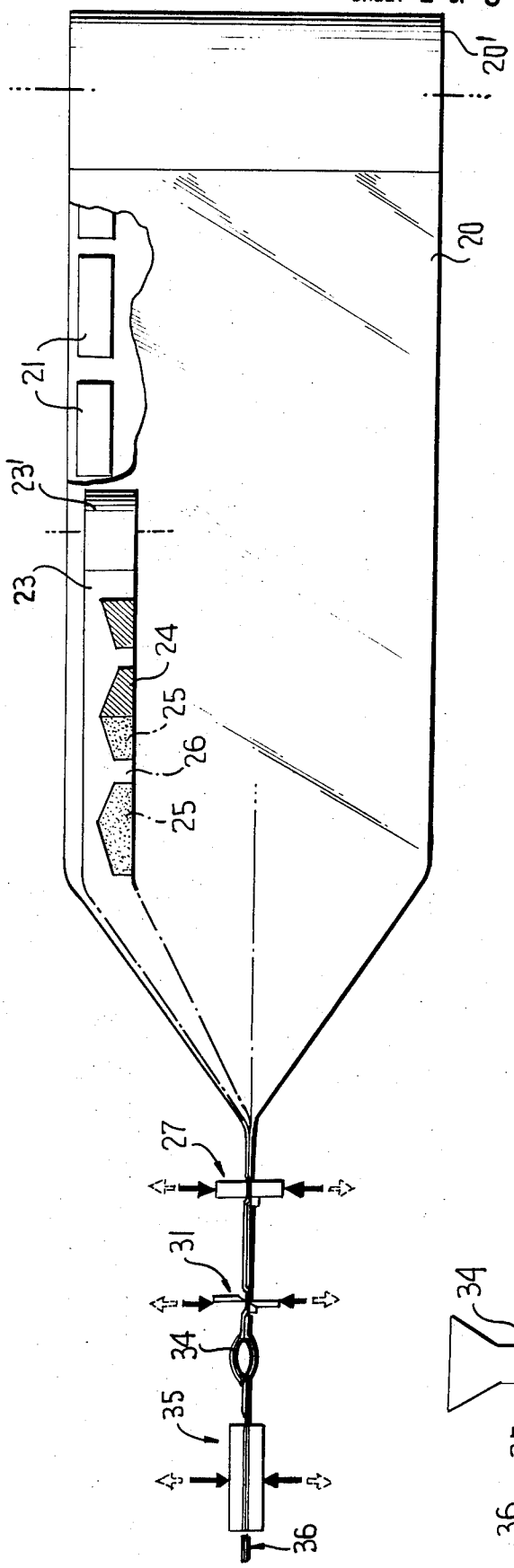
20'
20
21
23'
23
24
25
26
25
27
31
34
35
36

FIG. 2

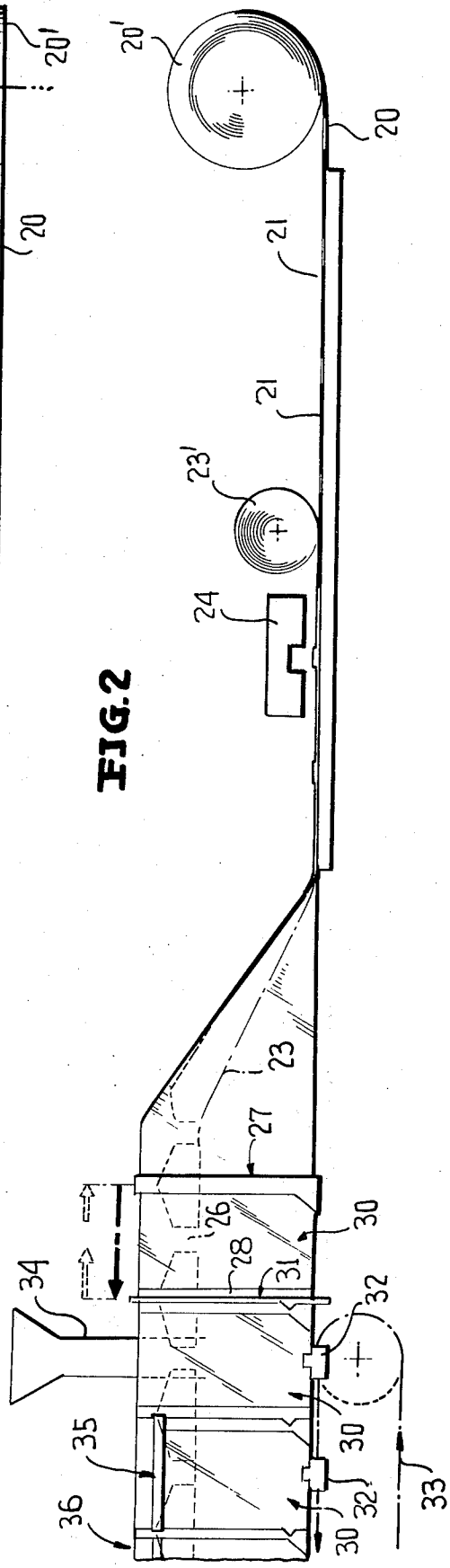
20'
20
21
21
23'
24
23
27
26
28
31
30
34
32
35
30
36
32
30
33

FIG.3

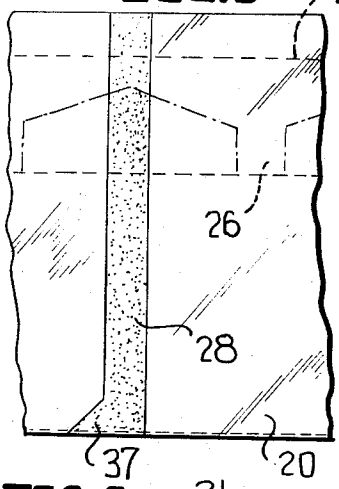

FIG.4

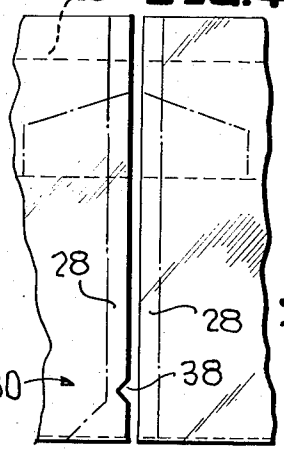

FIG.5

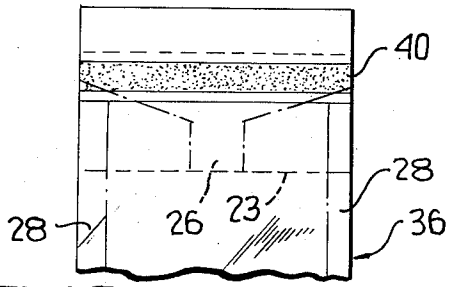

FIG.7

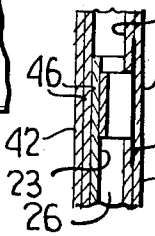

FIG.8

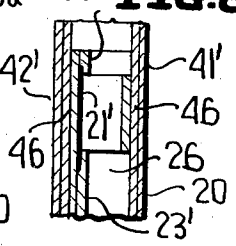

FIG.6

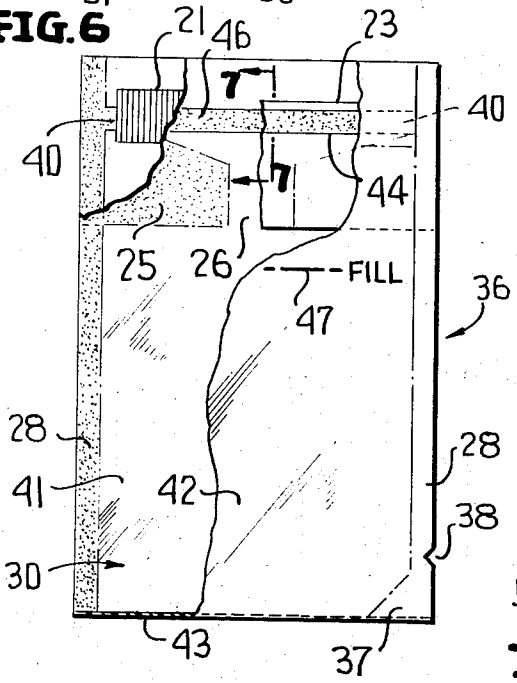

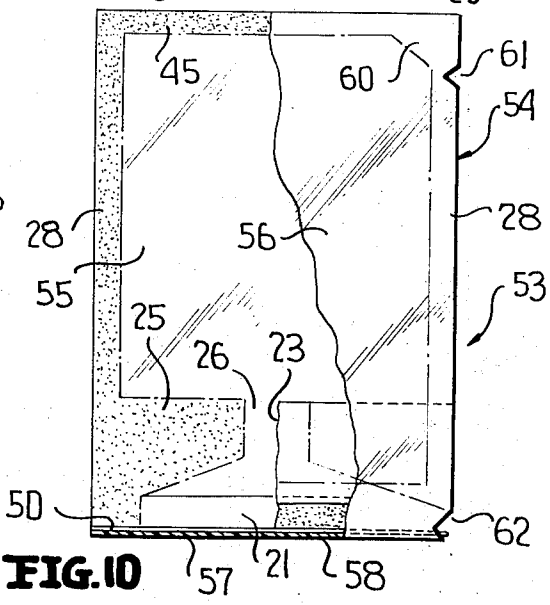

FIG.10

FIG.9

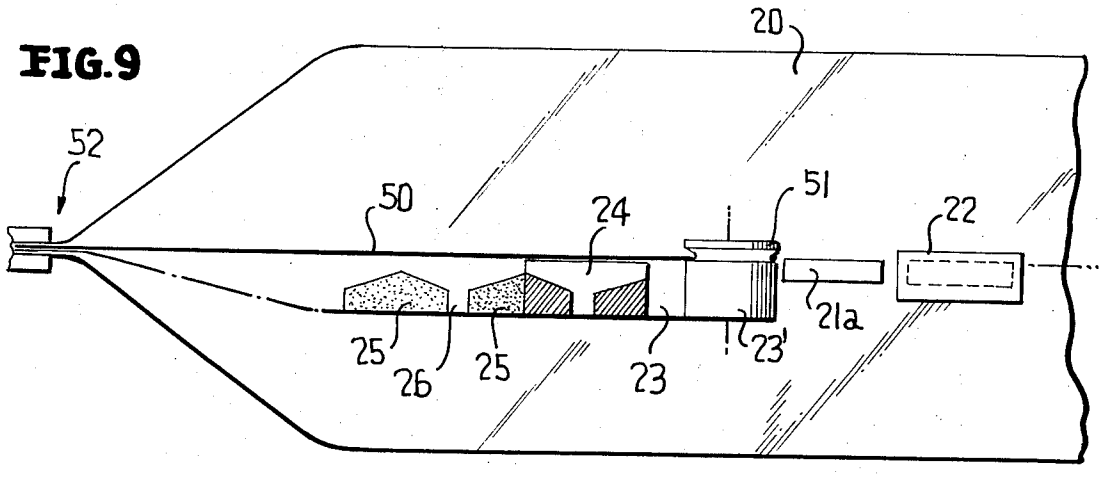

FIG. 11

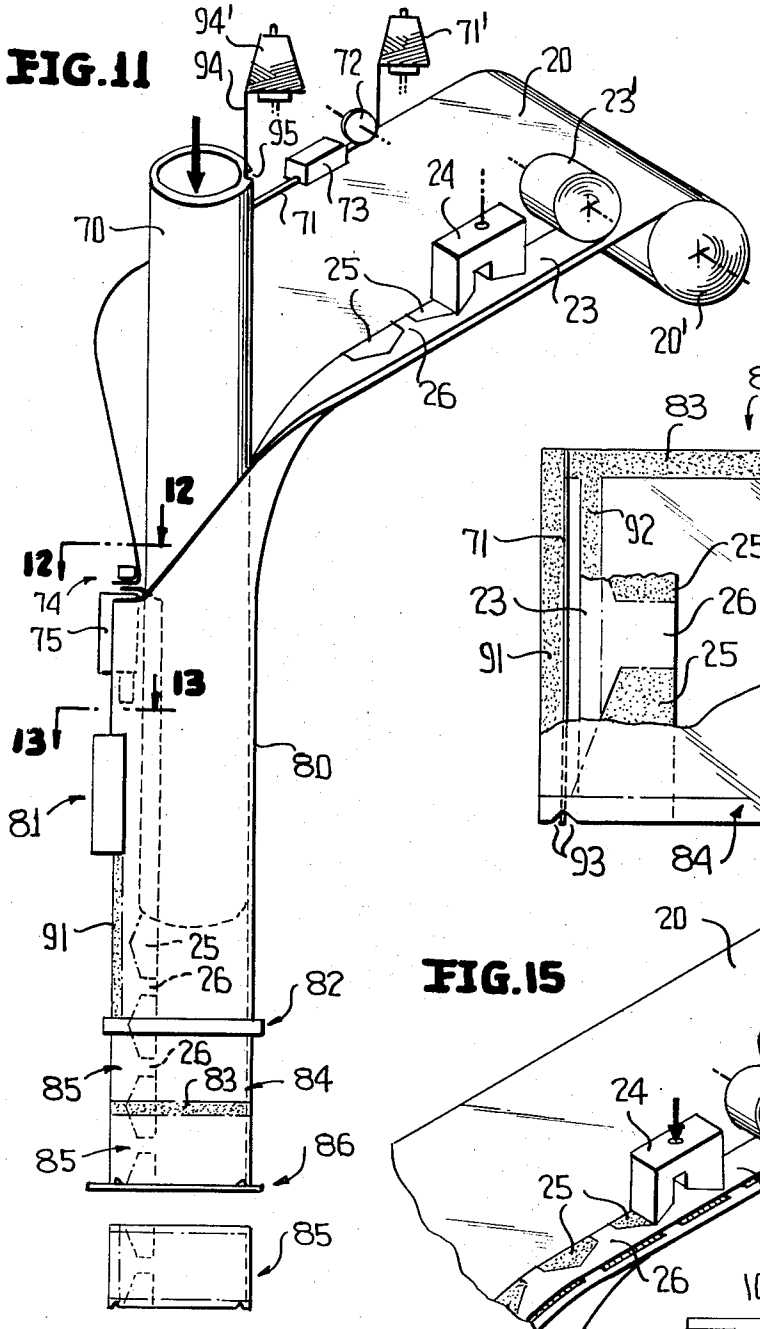

FIG. 17

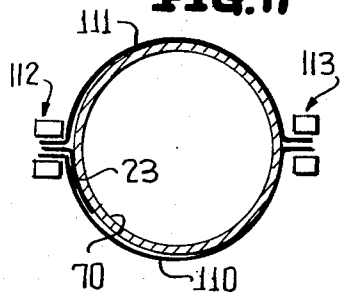

FIG. 14

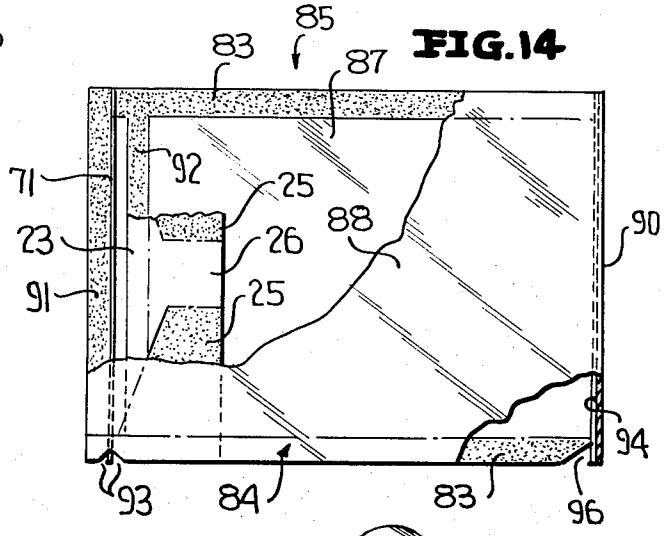

FIG. 15

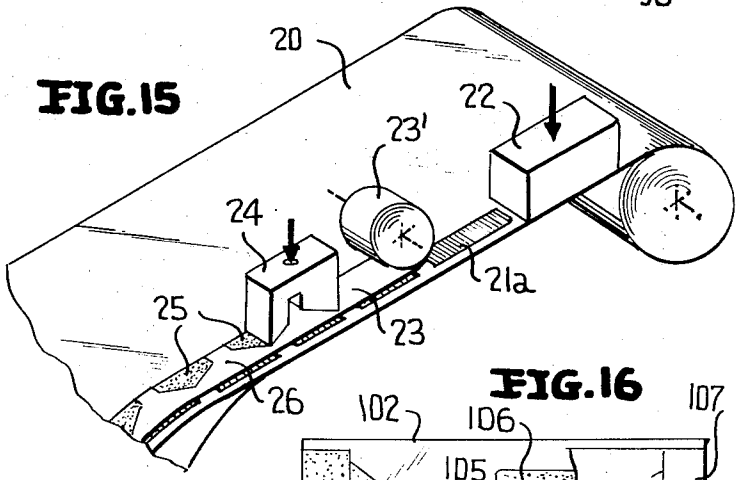

FIG. 16

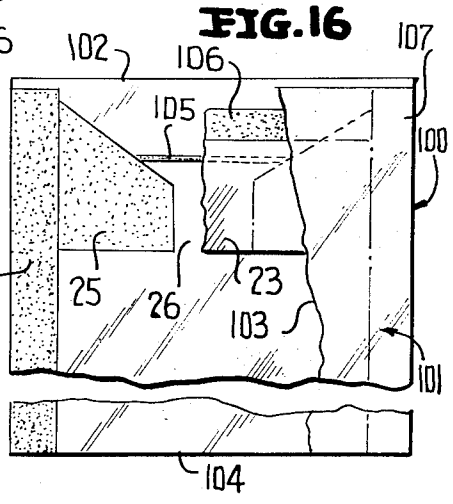

FIG. 12

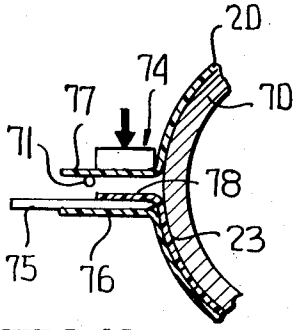

FIG. 13

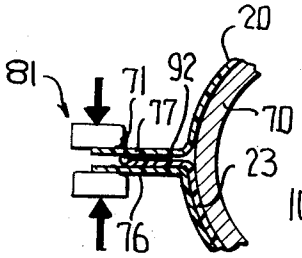

METHOD OF FORMING A PACKAGE

This application relates to an improvement over my copending application Ser. No. 39,375, filed May 21, 1970, entitled "FLEXIBLE PACKAGE WITH SELF-CLOSING OPENING," now abandoned.

This invention relates in general to new and useful improvements in packages of the form, fill and seal type and more particularly to such a package having a valved passage wherein a second product may be added to a product initially packaged within the package and mixed therewith before being dispensed therefrom. Such packages normally will contain a powdery material as the first product and the second product will be a liquid for mixing with the powdery material. The invention, of course, is not so limited.

BACKGROUND OF THE INVENTION

Many types of products are now sold in the dry form and are to be mixed by the user with a liquid, such as water, as an initial step in the subsequent processing or use of the original material. Examples of such products requiring the addition thereto of a liquid for further processing include cake mixes, pie crust mixes, pancake mixes and other food products which are sold in dry form and are to be mixed with milk or water by the user. Other examples of mixing requirements may be found among various non-food products such as plaster of Paris, cement mixes, and various liquid plastics to which a liquid catalyst is to be added which causes the plastic to set or become hard.

In order for a package to be economically competitive, it is preferable that it be of the form, fill, seal type. Such a package and method of making the same is dislosed in my application Ser. No. 39,375.

This invention relates to an improvement upon the package of my aforementioned application as well as novel methods of forming the improved package.

As is disclosed in my aforementioned prior application, one well-known manner of using products of the aforementioned character involves emptying the contents of the package in dry form into a suitable mixing container, adding the desired liquid to the proper amount and stirring or agitating the liquid and the dry mix together with a suitable implement. As a convenience to the user such products are preferably sold in packages having flexible walls and into which the proper amount of added liquid may be placed, the liquid and dry product being mixed in the package by flexing or kneading the walls of the package to obtain the desired mixing acton. After the desired mixture is obtained, it is then ejected from the package through an opening in the package wall which is formed for that purpose. Many advantages accrue to the user from a package of this type, particularly the saving in time and trouble in cleaning a mixin container in which the mixture would otherwise be prepared, since the original package constitutes a disposable mixing container when made according to the present invention.

One known type of container for this service is a sack-like container open at one end; but this has several objections. It is difficult to close. It one hand is employed to hold the original open end closed, only one hand is free to do the mixing. after mixing, the product is not sealed in and the product pours out if the user is not carful in attempting to stand the sack upright or store it.

Prior designs for packages of this type with varied inlet passages have not been entirely successful for various reasons. The chief problem has been to provide a one-way valve which remains securely closed during the mixing operation. In known designs of packages the valve does not always remain securely closed, with the result that some of the contents escapes through the partially open valve.

A container which most closely approaches the general appearance of the container of this application is found in British Pat. No. 930,893 to David Victor Bonsor entitled "Improvements in or Relating to Containers for Holding Liquids," published July 10, 1963. This patent, however, teaches only the formation of a single package at a time with the package being formed from two blanks which are of the same width, but one blank being slightly longer than the other. The longer blank is secured to the shorter blank by overlapping end portions of the blank and selectively sealing the same together to define a seal therebetween incorporating a valved passage, after which the longer blank is reversely folded upon itself and then sealed about the periphery thereof to the underlying blank. The container of the Bonsor patent is utilized for packaging liquids and the valved passage is utilized both for the filling of the container and the dispensing of the liquid therefrom.

The container of the Bonsor patent is one which is not adaptable to a continuous formation and there is no suggestion whatsoever that the container could be formed on a commercial basis and filled after being formed other than by the introduction of a liquid through the valved passage.

SUMMARY OF THE INVENTION

In view of the foregoing, it is proposed to provide a package of the form, fill, seal type wherein during an intermediate stage of the forming of a package, a first product is placed within the container followed by the final sealing of the package. The container is provided with a valved passage through which a second product may be introduced into the package and mixed with the first product packaged therein.

A primary feature of the invention is the provision of a package which may be produced on a continuous basis and wherein the formed container may be readily filled so as to be commercially acceptable.

Another feature of this invention is to provide a container or package which includes major web material which may be readily formed on a continuous basis into said packages by customary form, fill, seal methods of either the horizontal or vertical type and wherein each package includes a valved passage for the addition of a second product and for automatically closing the container after the addition of the second product permitting a thorough mixing of the two products utilizing both of one's hands.

In furtherance of the foregoing, the valved passage of each package is formed by a minor web portion which is sealed to the major web material and forms the desired valved passage as a separate stage of the form, fill, seal operation.

In the carrying out of this invention, a continuous minor web or individual minor web portions are bonded to a flat first container all forming portion of major web material in a manner to define between the minor web and the major web material a plurality of

valved passages. Thereafter, either a second container wall forming portion of the major web material and the first wall forming portion may be superimposed with the minor web disposed therebetween and then transversely sealed to define individual containers, or the container wall forming portions of the major web material may be formed into a tubular shape about an internal former. Such forming of the major web material may be followed by filling and final sealing operations as is customary in the form, fill, seal art

With the above, and other objects in view that will hereinafter appear, the nature of the invention will be more clearly understood by reference to the following detailed description, the appended claims and the several views illustrated in the accompanying drawings.

In the drawings:

FIG. 1 is a schematic plan view showing one method of forming packages with valved passages in accordance with this invention.

FIG. 2 is a side elevational view of FIG. 1 and shows further the details of the package forming method.

FIG. 3 is an enlarged fragmentary elevational view showing the details of a transverse seal between adjacent containers.

FIG. 4 is a view similar to FIG. 3 and shows adjacent containers separated by a cutting action.

FIG. 5 is an elevational view of the upper portion of a filled and sealed package and shows the details of the final seal thereof.

FIG. 6 is an elevational view of a package with portions broken away showing the specific details of a package formed in accordance with the method of FIG. 1.

FIG. 7 is an enlarged fragmentary transverse sectional view taken along the line 7—7 of FIG. 6 and shows the manner in which the valved passage of the sealed container is opened.

FIG. 8 is a sectional view similar to FIG. 7 and shows a modified form of container construction.

FIG. 9 is a fragmentary schematic plan view showing another method of forming packages similar to the method of FIG. 1, but wherein the initial package forming operations have been modified.

FIG. 10 is an elevational view similar to FIG. 6 with parts broken away showing a package formed in accordance with the method of FIG. 9.

FIG. 11 is diagrammatic elevational view of still another method of forming a package in accordance with this invention.

FIG. 12 is a fragmentary horizontal sectional view taken along the line 12—12 of FIG. 11 and shows the manner in which the major web material is further sealed to the minor web portion without closing the valved passage.

FIG. 13 is a fragmentary horizontal sectional view taken along the line 13—13 of FIG. 11 and shows the manner in which the side seal is formed on the tube so as to provide a complete sealing of the tube.

FIG. 14 is an elevational view similar to FIG. 6 with portions broken away showing the details of a package formed in accordance with the method of FIG. 11.

FIG. 15 is a schematic elevational view showing a modified first portion of the package forming method of FIG. 11.

FIG. 16 is a fragmentary elevational view with parts broken away of still another package which may be formed in accordance with this invention.

FIG . 17 is a schematic plan view showing a still further method of forming containers and packages in accordance with this invention utilizing a vertical former.

Referring to the drawings in detail, it is first pointed out here that while several methods of forming a package in accordance with this invention and several packages have been illustrated, these methods and packages are considered of equal importance and therefore, no preference is being made by the order of presentation.

With respect to the method of package formation illustrated in FIGS. 1 and 2, it will be seen that major web material 20 is dispensed from a roll 20' with the major web material 20 being formed of any suitable package forming film or lamination with the single requirement that the inner surface thereof must be self sealable upon the application of heat or seal forming media thereto. The description will be limited to heat sealing for convenience purposes. Further, the major web material 20 is an effective width equal to approximately twice the height of the desired package.

The major web material 20, as is customary in container construction, is in the form of a laminated film and has been pre-processed with a localized release area 21 printed between the laminates of the web to substantially reduce the bond therebetween, whereby the separation of the overlying edges of the major web material 20 above the top seal which will be formed for closing the container after a product has been placed therein, opens a rupturable channel into the package. The release area 21 may either be continuous or spaced, as shown. This type of opening is disclosed in my recently issued U.S. Pat. No. 3,608,709 entitled MULTIPLE COMPARTMENT PACKAGE, granted Sept. 28, 1971. The channel is opened by rupture of the inner laminate of the major web material 20 within the release area 21 and separation of the reduced bond between laminates, whereby a rupturable interlaminate channel is formed around the top closing seal in a manner specifically illustrated and described hereinafter with reference to FIG. 7.

A minor web 23 is fed from a roll 23' into overlying relation to that edge portion of the major web material 20 containing the interlaminate release area 21. It is to be noted that an outer edge of the minor web 23 is spaced inwardly from the adjacent edge of the major web material 20. It is also pointed out at this time that although the minor web 23 is preferably provided as a continuous web, it is feasible that it may be supplied in short lengths without departing from the spirit of the invention.

The minor web 23 is bonded to the major web material 20 preferably by heat-sealing, the opposite faces of the minor web 23 in the case of bonding by heat-sealing being of a material which will heat-seal to the inner surface of the major web material 20, as illustrated in FIG. 1. Heat-sealing is accomplished by means of a heated die 24 which bonds together the major web material 20 and the minor web 23 with the heat-sealed areas being identified by the numeral 25 and defining therebetween a passage 26, which passage lies between the minor web 23 and the major web material 20 and is a valved passage in that the placement of a product within the package to be formed in a manner described hereinafter will automatically effect a ballooning of the package and a closing of the passage 26. It is to be noted that

the passage 26 is generally funnel shaped in outline so as to facilitate the flow of a product therethrough.

The major web material 20 with the minor web 23 adhered thereto in the aforedescribed manner is then folded generally about a median line in a conventional manner to an upstanding position, as is shown at the left of FIG. 1. Thereafter, at regular intervals, the major web material 20 is transversely sealed both with respect to itself and also with respect to the minor web 23 by a transverse heat-sealer 27 to define a transverse heat-seal 28. The transverse heat-seals 28 define an open container which is generally identified by the numeral 30. It is to be noted that the container 30 is vertically disposed with the valved passage 26 thereof disposed uppermost.

At this time it is pointed out that the web material may be fed in any desired step-by-step manner. For purposes of illustration only, the transverse heat-sealer 27 has been illustrated as having a four motion type movement so that the transverse heat-sealer 27 may also be utilized as the means for feeding the web material.

After each container 30 has been formed, it is advanced at least one station where it is severed from the web material by means of a transverse cutter, generally identified by the numeral 31. At this time each container 30 is free. However, in accordance with this invention, each container 30, before it is severed from the web material, is gripped by means of a suitable holder which has been schematically illustrated and is identified by the numeral 32. In the schematically illustrated form of the invention, the holders 32 are carried by an endless conveyor chain 33 which is driven in any conventional manner in a step-by-step motion corresponding to the step-by-step advancing of the web material by the transverse sealer 27.

While supported by one of the holders 32 and generally after the container 30 is severed from the web material, a product is placed within the container 30 in a conventional filling operation utilizing a filler 34 which is schematically illustrated. It is to be understood that at this time the folded major web material 20 provides each container 30 with two walls, one of the walls having been secured to the minor web 23 and the other of the walls facing the minor web 23, but being free hereof. The filling of the container 30 with a product is accomplished between the minor web 23 and that container wall which is not bonded thereto at that time.

The container 30, with the product placed therein, then moves to a heat-sealing station where top sealers 35, which are slightly lower than a container 30, seal the minor web 23 to both of the package walls, sealing the valve passage 26 and sealing the minor web 23 to the other package wall. The package is now completed.

Reference is now made to FIGS. 3 through 7 wherein details of the containers 30 and the resultant packages formed therefrom, the packages being identified by the numeral 36, are illustrated. In FIG. 3, the webs are illustrated after a transverse seal 28 is formed. In FIG. 4, the webs are illustrated after a container 30 has been severed from the webs. It is to be particularly noted that in the forming of each transverse seal 28, which seal, as is clearly shown in FIG. 4, forms the side seals of two adjacent containers, has a lower portion 37 which extends generally into the container being defined by the transverse seal 28. When the container 30 is severed from the webs, in addition to cutting the web along the center of the transverse seal 28, a notch 38 may be formed in the edge of the container 30 generally in alignment with the triangular seal extension 37 to facilitate tearing open the container 30 after it has been sealed for the purpose of dispensing a product therefrom.

In FIG. 5 there is illustrated the upper portion of the package showing more specifically the details of a top seal 40 formed by the top sealer 35. It is to be noted that the top seal 40 is positioned fully in alignment with the minor web portion 23. Thus, as is shown in FIG. 6, the container 30 which may be considered as having two container walls or package walls 41 and 42 joined by a fold 43, has the container wall 42 fully sealed to the minor web portion 23 as at 44. At the same time, the top seal 40 seals the minor web portion 23 to the inner layer of the container wall 41 between the transverse seams 28 including across the valved passage 26, as at 46, sealing close the valved passage 26.

It is to be noted that the package 36 is completely closed with a first product (not shown) contained therein. When it is desired to utilize the product packaged within the package 36, the upper portions of the package walls 41, 42, which may be considered pull tabs are grasped and pulled apart. As shown in FIG. 7, this results in the rupture of the inner layer of the wall 41, identified by the numeral 20*a*, above and below the top seal portion 46. The valved passage 26 is now open for the placing of a second product within the container 30, the second product normally being a liquid. It will be readily apparent that the funnel-shaped configuration of the valved passage 26, together with the upper portions of the walls 41, 42 which form an extension of the funnel-shaped configuration, will permit ease of flow of a liquid into the container 30.

It is also pointed out at this time that if desired, the package wall 42 or the package wall 41 may be provided with suitable fill indicia identified by the numeral 47. This indicia may be printed on the underside of the web 20 during an early stage of the web formation in registration with the release area 21 in any desired manner. It is also feasible to apply the fill indicia to the web in advance in that the fill indicia may extend continuously longitudinally of the web 20 in that the vertical location will be assured in this manner. When the container 30 is provided with fill indicia, it is merely necessary to pour the proper liquid into the container 30 until it reaches the indicated level.

It is to be understood that after the second product has been placed within the container 30, the outward bulging of the container walls 41, 42 will result in the automatic reclosing of the valved passage 26 so that the package 36 may be readily handled in both hands for the purpose of mixing the two products within the container 30. The mixed products may then be dispensed by removing a lower portion of the container 30, preferably in the manner indicated.

Referring now specifically to FIG. 7, it will be seen that there is specifically illustrated the manner in which the sealed package is opened so as to reopen the previously sealed valved passage 26 for the reception of a second product. When the unsealed upper portions of the walls 41, 42 are pulled apart, the inner laminate 20*a* of the wall 41 is stressed above and below the top seal 40 in alignment with the release area 21 with the result

that the inner laminate 2*a* ruptures both above and below the top seal and the minor web **23** moves away from the wall **41**, thereby providing a modified channel opening into the valved passage **26**. It is to be noted that the valved passage **26** is sealed in the funnel area thereof and thus this modification of the valved passage in no way operates to hinder the automatic closing of the valved passage **26** when a second product is added to the container.

Reference is now made to FIG. **8** wherein a modified container construction is illustrated. In the container of FIGS. **3** through **7**, the minor web **23** was illustrated as being of a single layer construction, although it could have easily as well been of a laminated construction. In addition, the release area **21** was formed in the major web material **20** within the wall **41**. The container construction of this application is not so limited. If desired, the minor web may also be of a laminated construction and the release area may be formed within the minor web. Such a container cons1ruction has been illustrated in FIG. **8** with the container walls being identified by the numerals **41'**, **42'** and the minor web being identified by the numeral **23'**. The release area of the minor web **23'** has been identified by the numeral **21'** and that laminate of the minor web **23'** which is ruptured in the opening of the container is identified by the numeral **23***a*.

It is to be understood that in the container construction of FIG. **8**, the minor web **23'** will be sealed to that portion of the major web material **20** which eventually becomes the wall **41'** in the same manner as that illustrated in FIGS. **1** and **2** and described above. The only difference between the container constructions of FIGS. **7** and **8** is that during the opening of the container for the insert1on of a second product thereinto through the valved passage **26**, in lieu of a laminate of the wall **41'** rupturing, the laminate **23***a* of the minor web **23'** facing the wall **41'** will rupture. The release area **21'** will be formed in the minor web **23'** in the same manner as that described above with respect to the release area **21**, but is preferably continuous.

In FIG. **9** there is illustrated a modified method of forming a slightly modified form of container and package. As in FIG. **1**, a web **20** will be provided. However, in lieu of the web **20** being of a laminated construction with release areas formed therein, the web **20** will be of a conventional construction and either of a single ply or of a laminated construction, as desired. As a first step in the package forming method, a coating of seal resistant material **21***a* is applied to the major web material **20** in a pattern by means of a suitable type of applicator, generally identified by the numeral **22**. The seal resistant material **21***a* is deposited at regularly spaced intervals in accordance with the predetermined package width and is intended to be centered relative to packages formed from the web material **20**. The seal resistant material is applied to the web material **20** adjacent the center line thereof.

Thereafter, the minor web **23** is applied to the major web material **20** and secured thereto to define a plurality of valved passages **26** at regularly spaced intervals between the minor web **23** and the major web material **20**. The minor web **23**, of course, is applied adjacent the center of the major web material **20**.

There is also supplied to the major web **20** along the center line thereof a fine string or tear element **50** which may be supplied from any type of supply and normally will be positioned on the major web material **20** by a suitable guide **51**.

The major web material **20** is then folded upwardly in a vertical plane in the manner illustrated in FIGS. **1** and **2** and as described in connection therewith. After the major web material **20** has been folded to the upright position, the major web material is further sealed to the minor web on the side of the minor web opposite from the heat-seals **25** by means of a bottom heat-sealer **52**. Thereafter the webs have performed thereon the same sealing, cutting and filling operations as illustrated in FIGS. **1** and **2** and described in conjunction therewith. However, it is to be understood that the valved passages **26** are disposed lowermost in the containers at the time they are being filled and that the filling occurs between the unsealed edges of the major web material **20**. Also, the top sealer **35** seals together the unsealed edges of the web material **20** independent of any sealing action relative to the minor web portions **23**.

Referring now to FIG. **10** in particular, it will be seen that there is illustrated a package **53** which is formed in accordance with the method of FIG. **9**. The package **53**, of course, includes a container which is identified by the numeral **54**. The container includes a pair of container walls **55**, **56** which are integrally connected at their lower edges along a fold line **57**. The tear element **50** is disposed at the extreme bottom of the container **54** and positioned to separate the container walls **55**, **56** along the fold line **57**.

The container wall **55** is sealed to the minor web portion **23** along the heat-sealed areas **25** and the valved passage **26** is disposed between the minor web portion **23** and the container wall **55**. The container wall **56** is also sealed to the minor web portion **23** by a bottom seal **58** which extends the full width of the package, which bottom seal, when being formed, does not result in a sealing close of the valved passage **26** in view of the existence of the seal-resistant material **21***a*.

The container walls **55** and **56** are also sealed together and to the minor web portion **23** by transverse or side seals **28**. Further, at the upper end of the container **54**, the container walls **55** and **56** are secured together by the top seal **45**.

It is to be noted that in the formation of the side seals **28** at one upper corner of the container **54** the side seal extends diagonally across the container as at **60** to define a tear line for the purpose of opening the container and dispensing the products therefrom. Further, in cutting the container **54** from the webs, a notch **61** is formed adjacent the seal portion **60** to facilitate the tearing away of the corner of the container **54**.

Also in the cutting of the container **54** from the web material, a notch **62** is formed adjacent the bottom of the container **54** generally in alignment with the tear element **50**. It is to be understood that after a first product (not shown) is placed within the container **54** and the same is sealed to form the package **53**, the package is completely sealed even though it does include the valved passage **26** for the admission of a second product. When it is desired to place a second product within the package **53**, the material of the major web material **20** along the fold line **57** is ruptured by tearing utilizing the tear element **50**. The minor web element **23** remains bonded to the container wall **56** by the bottom seal **58**, but entrance into the container **54** is now possible through the valved passage **26** and the second prod-

uct is placed within the package **53** in the manner described hereinabove with respect to the package **36.**

From the foregoing, it will be seen that packages in accordance with this invention may be readily formed on horizontal machines and that several variations of the method of utilizing horizontal equipment is possible and may be advantageously utilized. It is also to be readily understood that the type of seal releasing means or seal resisting means utilized may be varied without varying the function of the package or the method of forming the same.

Reference is now made to FIGS. **11, 12** and **13** wherein there is illustrated the method of forming packages in accordance with this invention on a vertical machine. In accordance with the illustrated method, the major web material **20** is supplied from a roll **20'** with the major web material **20** being led to a conventional tube forming mechanism of which only an internal former **70** is illustrated. However, before the major web material **20** is formed into a tube, a minor web **23** is dispensed from a roll **23'** and is applied to the major web material **20** adjacent one edge thereof and a plurality of individual heat-sealing steps performed by a heat-sealer **24** which bonds the minor web **23** to the major web material **20** through a repeating pattern of heat-seals **25** which define valved passages **26.**

The major web material **20** has also applied thereto adjacent the edge thereof remote from the minor web **23** a pull element **71** which is supplied from a supply spool **71'** and is applied to the major web material preferably by means of a guide **72** and is suitably bonded to the web material **20** by a bonding apparatus **73.**

The web material **20,** so modified, is shaped into tubular form around the internal former **70** in a conventional manner. Thereafter, a first side sealing operation is performed on the shaped web by a heat-sealer **74** in conjunction with a seal preventing blade **75.** As is clearly shown in FIG. **12,** the web material **20** has an edge portion **76** which projects outwardly beyond the minor web **23.** The major web material **20** also has a second edge portion **77** which now opposes the edge portion **76.** Furthermore, the heat-seals **25** do not extend to the outer edge of the minor web **23** so that the minor web **23** also has an edge portion **78** which is free and which projects outwardly of the former **70.** The seal preventing blade **75,** which is stationary, is positioned so that it is received between the edge portions **76** and **78** and thus will prevent the further sealing of the minor web **23** to the major web material **20.**

The side sealer engages the edge portion **77** inwardly of the tear element **71** and presses the same against the edge portion **78** with the edge portion **78** being backed up by the blade **75.** The side sealer **74,** although it has been illustrated as moving toward the blade **75** may also be stationary, and serves to bond the edge portion **77** to the edge portion **78** and thus form a tube **80** (FIG. **11**) which has a continuous side seal on one surface of the minor web **23** and a plurlaity of valved passages on the opposite side thereof. When the side sealer **74** is stationary, it will be of a length no greater than the blade **75.**

After the edge portion **74** is bonded to the edge portion **78,** the edge portions **76** and **77** pass through a further side sealer **81** which, as is clearly shown in FIG. **13,** is disposed outwardly of the tear element **71** and which bonds the edge portions **76** and **77** together outwardly of the tear element **71** and independently of the edge portion **78.** The side sealing of the tube **80** is now complete.

Below the lower end of the internal former **70,** a transverse heat-sealer **82** engages the sealed tube **80,** flattens the same and provides a transverse seal **83** thereon. The transverse seals **83** are repeated at regular intervals and have centered therebetween the valved passages **26.**

At this time it is pointed out that the tube **80** may be intermittently advanced between each transverse sealing operation in any conventional manner including the utilization of the transverse sealer **82** as the means for drawing the sealed tube **80** downwardly.

After the tube **80** has been closed by a transverse seal **83,** a product is placed within the tube **80** through the hollow internal former **70** with the product coming to rest in the closed lower end of the tube **80.** Thereafter, in the next transverse sealing operation, the product is entrapped within a compartment of the tube **80** defined by two vertically adjacent transverse seals **83.** The desired container, which is identified by the numeral **84** is now completed and the resultant package **85** is ready to be severed from the tube **80.** This is accomplished by means of a transverse cutter **86** which severs the web material transversely generally along the center of a respective transverse seal **83.** The completed package **85** now drops.

Reference is now made to the formed container **84** and the package **85** of which it is a part as is clearly shown in FIG. **14.** First of all, it will be apparent that the major web material **20** now defines two container walls **87, 88** which are integrally connected along a lower fold line **90** and which have the edges thereof remote from the fold line **90** sealed together by a seal **91** which has been formed by the side sealer **81.** The container walls **87, 88** along the cut edges of the web material **20** are sealed by the transverse seal **83.** The container wall **88** is bonded to the minor web portion **23** by the seals **25** defining the valved passage **26** between the web portion **23** and the container wall **88.** Further, the web portion **23** is fully sealed between the transverse seals **83** to the container wall **87** along a seal **92** formed by the side sealer **74.** It is to be noted that the seals **91** and **92** are separated from one another and that the tear element **71** is disposed in the space therebetween.

When the next lower package **85** was cut from the web material, the transverse cutter **86** also formed notches **93** in the lowermost sealed area **83** adjacent to and on opposite sides of the tear element **71** and in alignment with the space between the seals **91, 92.** The package **85** being fully sealed during the handling and storage, as well as the dispensing thereof, when it is desired to add the second product to the product packaged within the package **85,** it is necessary to open the same to gain access to the interior of the container **84** through the valved passage **26.** This is accomplished by utilizing the notches **93** and the tear element **71** to tear through one of the container walls **87, 88** which are sealed together by the seal **91.** Access to the interior of the container is now available through the valved passage **26.** After an initial opening of the package has taken place, the necessary second product may be added to the product packaged within the container **84** through the valved passage **26.** The two products may then be mixed together freely in the manner previously described.

It is to be understood that the package **85** may be opened in any desired manner for the purpose of dispensing the mixed products therefrom. If desired, one of the seals **83** may be configurated like the seals **28** of the packages **36** and **53.** On the other hand, it has been found convenient to provide the package **85** immediately adjacent the fold **90** with a second tear element **94.** The tear element **94** will be dispensed from a spool **94'** and will pass down through the tube **80** in a guide passage **95** formed in the external surface of the internal former **70,** as is shown in FIG. **9.** During the transverse sealing of the tube **80** by the transverse seals **83,** the tear element **94** will be sealed to the web material at spaced intervals and during the severing of the packages **85** from the web material, the tear element **94** will also be severed.

When the package **85** includes a tear element **94,** the transverse cutter **86** will also be provided with means for providing a second notch **96** in that edge of the package which is disposed lowermost at the time of separation from the web with the notch **95** being immediately adjacent one end of the tear element **94,** thereby permitting the ready grasping of the tear element **94** and the tearing open of the container **84** for the purpose of dispensing the products mixed therein.

It is to be understood that if it is so desired, the tube **80** may be sealed in a single side sealing operation. When it is desired to do so, prior to the application of the minor web **23,** seal resistant material **21** applied to the web material **20** utilizing suitable apparatus **22** as described with respect to the method of FIG. **7,** as illustrated, or the web material may have incorporated therein release areas **21,** as disclosed in FIGS. **1** and **2.** Thereafter, the minor web **23** is applied to the major web material **20** utilizing the heat-sealer **24** forming heatseals **25** between the minor web **23** and the major web material **20** and defining the valved passages **26.**

After the minor web **23** has been applied to the major web material **20** in the manner illustrated in FIG. **15,** the webs are formed into a tube in the manner illustrated in FIG. **11** and thereafter a side sealer which is preferably of a width to both seal the edges of the web material **20** together and to seal that portion of the web material **20** initially remote from the web **23** to the web **23** on the opposite face thereof from the valved passages **26** with the net result being a sealing such as is accomplished by the sealers **74** and **81** and including seals corresponding to the seals **91** and **92** of FIG. **14.**

It is also pointed out at this time that if desired, either or both of the tear elements **71** and **94** may be applied in the manner illustrated in FIG. **11.**

Reference is now made to FIG. **16** wherein there is illustrated a still further form of package which is generally identified by the numeral **100.** The package **100** includes a container **101** which includes a pair of container walls **102** and **103** integrally connected together at the bottom of the container **101** along a fold line **104.** A minor web portion **23** is heat-sealed to the inner face of the container wall **102** by heat-sealed areas **25** defining a valved passage **26** in the afore-described manner. However, there is a further seal **105** which can be a pressure sensitive seal, a heat-seal, or other type seal extending transversely across the valved passage **26** and temporarily sealing the same. It is to be understood that the seal **105** between the container wall **102** and the web **23** is one which can be readily ruptured without rupturing the material of the web **23** of the container wall **102** by pulling the two apart. The container wall **103** is also secured to the web **23** by a seal **106.** The container **101** is completed along the side by seals **107.**

The package **100** has certain advantages. First of all, by having the free edges of the container walls **102, 103** offset, it is easy to separate the two. Once the two container walls have been separated and grasped, pulling apart of the container walls will result in the rupture of the seal **105,** thereby opening the valved passage **26** for the introduction of a second product into the package **100.** On the other hand, until the seal **105** has been ruptured, the package **100** remains completely sealed.

Another feature of the seal arrangement of the container **101** is that since it is not necessary to cut away or tear off the upper portions of the container walls **102, 103,** these container walls form an upper extension of the funnel configuration of the upper part of the valved passage **26.** This makes it much easier to place the second product within the container **101.**

At this time it is pointed out that no means have been illustrated for the purpose of opening the package in dispensing the mixed products therefrom. It is to be understood that the several opening means illustrated in FIGS. **6** and **14** may be advantageously utilized. It is also pointe out at this time that the container **101** may be provided with a fill line indicia of the type illustrated in FIG. **6** and that such fill line indicia may equally as well be utilized in the other containers of this disclosure.

It is further to be understood that the container **101** could be formed either in a horizontal manner as shown in FIGS. **1** and **2** or a vertical manner as shown in FIG. **11.**

Reference is now made to FIG. **17** wherein there is illustrated still another form of means for forming packages in accordance with this invention. Although in the foregoing descriptions, the two walls of each package have been formed from major web mateial in the form of a single web, it is also feasible to supply the major web material as to individual webs **110, 111,** as is shown in FIG. **17.** A suitable minor web **23** will be pattern sealed to one of the webs of the major web material in one of the manners described hereinabove, the minor web **23** having been illustrated as being secured to the web material **110.** Thereafter, the two web materials **110, 111** are brought together on opposite sides of a single former, such as the former **70,** and the edges of the web materials **110, 111** are secured together by means of suitable sealers, generally identified by the numerals **112** and **113,** respectively, the sealer **113** sealing together the web material **110, 111** along that which eventually will be the bottoms of the packages and the sealer **112** functioning in the same manner as the sealers **74** and **81** or equivalent sealers.

No further details of the package forming operation in accordance with FIG. **17** will be set forth here. It is to be understood that the other steps of the package forming operation will be identical to those described with respect to FIG. **11.**

Although in the several forms of the invention the minor web **23** has been illustrated as being disposed closely adjacent to either the side edge or the center of the major web material **20,** it is to be understood that the minor web **23** could be offset a distance on the order of ½ inch or slightly greater with the seal between

the two container walls being narrower than the offset so that even when the sealed edge portions are removed, there would be free material of the container walls extending above the minor web and the valved passage formed between the minor web and one of the container walls. These free edge portions of the container walls may then be utilized for the opening of the valved passage, and at the same time would form an extension of the filling funnel portion of the valved passage so as to facilitate the introduction of a second product thereinto. Further, when these free edge portions or flaps are sufficiently wide, if it is desired to reseal the package after the second product has been inserted therein through the valved passage, this may be readily accomplished by means of heated dies or the like.

It is also particularly pointed out here that the specific package construction illustrated in the drawings may be formed from a major web which has only one surface thereof heat-sealable together. By having the outside surface of the web material **20** of a material that is not heat-sealable, transfer of plastic material from the web material to the heated sealing dies is eliminated. This eliminates a problem which frequently occurs in the forming of packages of the type to which this invention relates.

It is also to be understood that the major web material **20** may be supplied as two separate web materials in the embodiments of FIGS. **1, 2, 9** and **15** in the same manner as that generally shown with respect to FIG. **17.**

Although several preferred embodiments of package and method of forming the same have been specifically illustrated and described herein, it is to be understood that other minor variations may be made therein without departing from the spirit and scope of the invention, as defined by the appended claims.

I claim:

1. A method of forming a package with a valved passage having two inner surfaces, said package having two walls joined by four transverse closures adjacent four ends thereof respectively and an accessible package entrance to said valved passage adjacent one end, said method comprising the steps of providing major web material successively supplying two wall portions to form said two outer walls respectively, providing a minor web to form in part said valved passage, repeatedly sealing successive portions of said minor web to said successive portions of only one of said two wall portions to define therebetween said two inner surfaces of said valved passage with said valved passage being produced in plurality, superimposing said two wall portions with respective valved passages and said minor web portions disposed therebetween to relatively position said two outer walls, advancing said superimposed wall portions past multiple sealing stations, sealing said superimposed wall portions together with two transverse package closure seals on opposite sides of each of said valved passages and generally perpendicular to the direction of said advancement, placing a product between said outer walls and sealing the other of said two wall portions to the minor web portion.

2. The method of claim **1** wherein the product is placed within said package through one of said ends prior to placing the respective one of said four closures.

3. The method of claim **1** wherein said major web material comprises two separate major webs advancing simultaneously with each of said separate webs providing a different one of said two wall portions, sealing said two separate webs to one another along adjacent edges thereof to form one of said four transverse closures, and the other three transverse closures are also seals.

4. The method of claim **1** wherein said major web material comprises a single major web folded longitudinally with each of said two wall portions disposed on separate sides of said fold and opposite to each other, and one of said four transverse closures is said fold.

5. The method of claim **4** wherein a tear string is positioned along said fold for facilitating the opening of said package.

6. The method of claim **4** wherein said transverse package closure seals are formed prior to the sealing of said other package wall to the minor web portion, and the product is placed within said package through the space between said other package wall and the minor web portion prior to the forming of said seal therebetween.

7. The method of claim **6** wherein in the formation of said package said major web moves in a generally horizontal direction, and during the filling of said package said package walls are generally upstanding with said valved passage being at the upper end of said package.

8. The method of claim **3** wherein in the formation of said package said major web material moves in a generally horizontal direction, and during the filling of said package said package walls are generally upstanding.

9. The method of claim **1** wherein during the sealing of the other of said two wall portions to the minor web portion the valved passage is prevented from receiving a permanent closure by ruptureable means to facilitate accessibility thereto.

10. The method of claim **4** wherein said minor web portions are sealed to said single major web adjacent a median line thereof.

11. The method of claim **10** wherein in the formation of said package said single major web moves in a generally horizontal direction, and during the filling of said package said package walls are generally upstanding with said valved passage being at the lower end of said package and the upper end of said package being open for the reception of the product.

12. The method of claim **4** wherein said sealing of the other wall portion to the minor web portion is prior to the placement of said two transverse seals whereby said single major web is formed into a tube, and the product is placed in each package after the forming of one of said transverse seals and prior to the forming of the other of of said transverse seals.

13. The method of claim **4** wherein prior to placing said two transverse package closure seals said single major web is passed around an upstanding former and shaped into tubular form thereabout and sealed into a tube.

14. A method of forming a package with a valved passage having two inner surfaces, said package having two outer walls joined by four transverse closures adjacent four ends thereof respectively and having an accessible package entrance to said valved passage also adjacent one of said ends, said method comprising the

steps of providing a major web material successively supplying two wall portions to form said two outer walls respectively, providing a minor web to form in part said valved passage, repeatedly sealing successive portions of said minor web to said successive portions of only one of said two wall portions to define therebetween said two inner surfaces of said valved passage with said valved passage being produced in plurality, superimposing said two wall portions with respective valved passages and said minor web portions disposed therebtween to relatively position said two outer walls, advancing said superimposed wall portions past multiple sealing stations, sealing said superimposed wall portions together with two transverse package closure seals on opposite sides of each of said valved passages and generally perpendicular to the direction of said advancement, placing a transverse closure seal adjacent one of said package ends to join the other of said two wall portions to the minor web portion, and placing a product within said package through one of said ends, and thereafter forming the respective one of said transverse closures.

15. The method of claim **14** wherein said major web material comprises two separate major webs advancing simultaneously with each of said separate webs providing a different one of said two wall portions, sealing said two separate webs to one another along adjacent edges thereof to form one of said four transverse closures, and the other three transverse closures are also seals.

16. The method of claim **1** wherein said major web material comprises a single major web folded longitudinally with each of said two wall portions disposed on separate sides of said fold and opposite to each other, and one of said four transverse closures is said fold.

17. The method of claim **16** wherein said transverse package closure seals are formed prior to the sealing of said other package wall to the minor web portion, and the product is placed within said package through the space between said other package wall and the minor web portion prior to the forming of said seal therebetween.

18. The method of claim **17** wherein the formation of said package said major web moves in a generally horizontal direction, and during the filling of said package said package walls are generally upstanding with said valved passage being at the upper end of said package.

19. The method of claim **15** wherein in the formation of said package said major web material moves in a generally horizontal direction, and during the filling of said package said package walls are generally upstanding.

20. The method of claim **14** wherein during the sealing of the other of said two wall portions to the minor web portion the valved passage is prevented from receiving a permanent closure by rupturable means to facilitate accessibility thereto.

21. The method of claim **16** wherein said minor web portions are sealed to said single major web adjacent a median line thereof.

22. The method of claim **21** wherein in the formation of said package said single major web moves in a generaly horizontal direction, and during the filling of said package said package walls are generally upstanding with said valved passage being at the lower end of said package and the upper end of said package being open for the reception of the product.

23. The method of claim **16** wherein said sealing of the other wall portion to the minor web portion is prior to the placement of said two transverse seals whereby said single major web is formed into a tube, and the product is placed in each package after the forming of one of said transverse seals and prior to the forming of the other of said transverse seals.

24. The method of claim **16** wherein prior to placing said two transverse package closure seals said single major web is passed around an upstanding former and shaped into tubular form thereabout and sealed into a tube.

* * * * *