(No Model.)

H. CROFT, Jr.

POWER CONVERTER FOR CONVERTING RECIPROCATING INTO ROTARY MOTION.

No. 253,515. Patented Feb. 14, 1882.

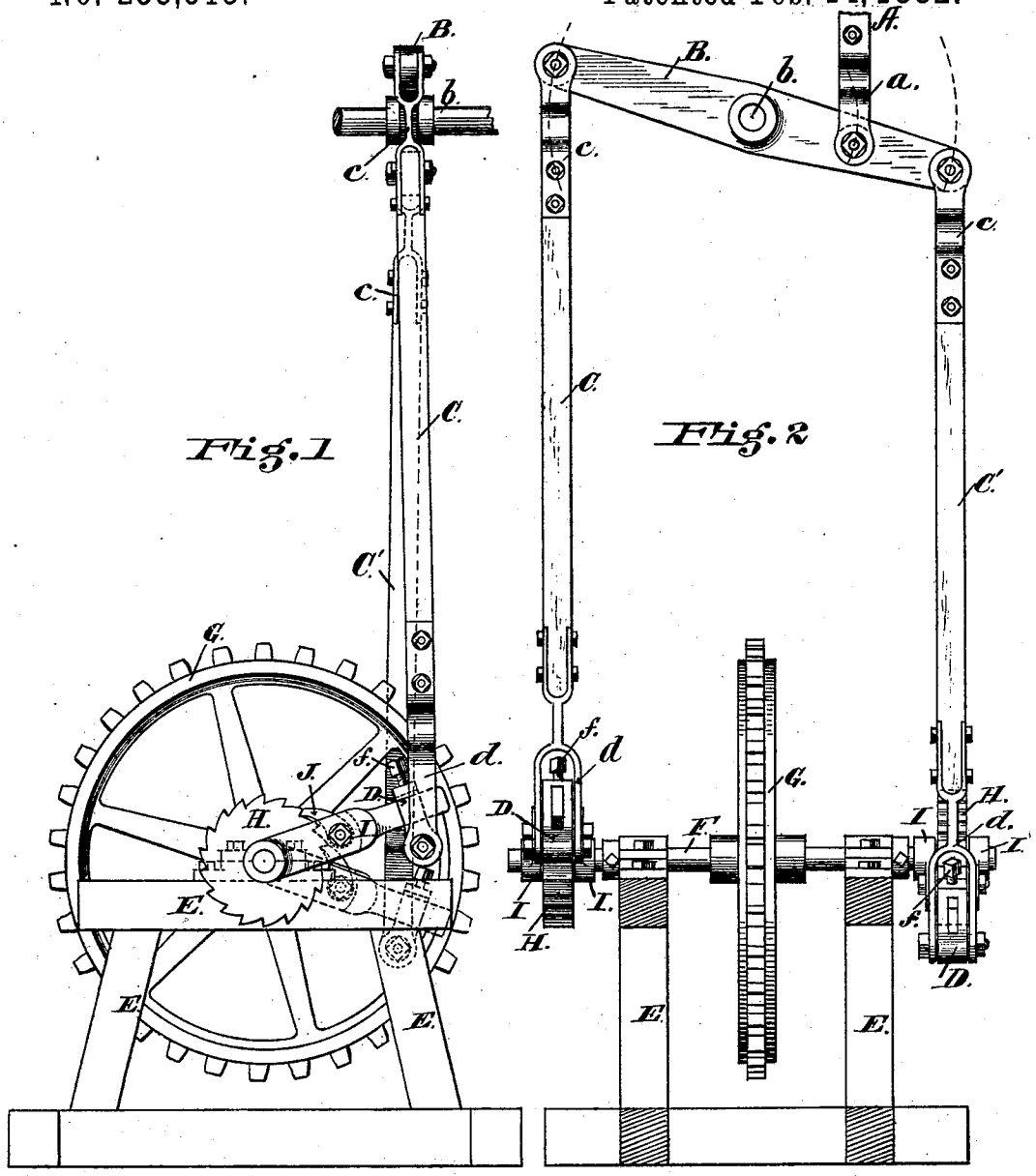

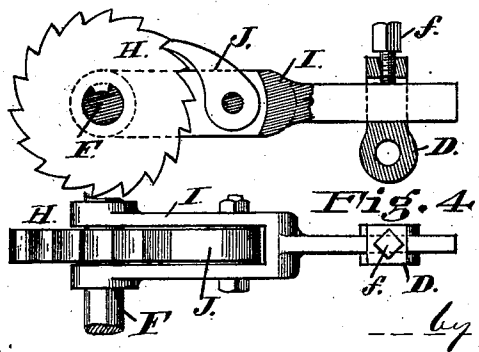

Attest

Gus A. Meyer

Jas. F. Twohig

Inventor

Henry Croft Jr.

by Stern & Peck

his Attys

N. PETERS, Photo-Lithographer, Washington, D. C.

UNITED STATES PATENT OFFICE.

HENRY CROFT, JR., OF SPRINGFIELD, OHIO, ASSIGNOR OF ONE-HALF TO FRANCIS M. BOOKWALTER, OF SAME PLACE.

POWER-CONVERTER FOR CONVERTING RECIPROCATING INTO ROTARY MOTION.

SPECIFICATION forming part of Letters Patent No. 253,515, dated February 14, 1882.

Application filed December 27, 1881. (No model.)

To all whom it may concern:

Be it known that I, HENRY CROFT, Jr., residing at Springfield, Clarke county, Ohio, have invented certain new and useful Improvements in Power-Converters for Converting Reciprocating into Rotary Motion, and it is designed especially for a power-converter for wind-engines, of which the following is a specification.

In this class of machines there is usually a vertically-reciprocating pump-rod operated by a crank or eccentric on the wind-wheel shaft, and it has long been a problem to utilize the power of the wind-wheel for grist-mills, corn-shellers, and the like machinery. I am aware that machinery for this purpose has been designed before, but for various reasons has failed in producing satisfactory results with small wind-wheels or those of comparatively limited power.

My present invention has for its object the utilization of the largest per cent. of the power of the wind-wheel for the purpose of running machines of the class above designated, or generally any machinery within the power of the wheel.

The novelty of my invention consists in the combination, with the reciprocating pump-rod and the driving-wheel of the motor-engine, whose shaft is provided with ratchets, of alternately-acting dogs operated from the pump-rod through the medium of links and levers, whereby a continuously-revolving motion is imparted to the driving-wheel; also, in details of construction and combinations of the parts, as will be herewith set forth.

In the accompanying drawings, Figure 1 is a side elevation of my apparatus. Fig. 2 is an end view of the same. Fig. 3 is an enlarged detail view of the ratchet and dog-carrying link with one side broken away. Fig. 4 is a plan view of the ratchet, dog, and link.

The same letters refer to like parts in the different figures.

A, Fig. 2, is the lower end of the pump-rod, which works up and down in the usual way. It is pivoted by means of the link *a* to the vibrating cross-beam B, which is pivoted at its center *b* to any suitable frame-work. The two beams C C′ are pivoted by means of links *c* to the ends of the vibrating beam B in any suitable manner. Upon the lower beams, C C′, are secured metal links *d*, in the lower end of which are pivoted the slotted blocks D.

In any properly-constructed frame-work, E, is journaled a shaft, F, carrying a driving-wheel, G. Upon the outer ends of shaft F are keyed or otherwise fastened ratchet-wheels H. Straddling each of these ratchets and hung upon the shaft F are links I, with rearward extensions which pass through the slot in the links *d*, and are held adjustably by set-screws *f*, inserted through the tops of the links *d*.

Pivoted in or near the forks of the links I, are dogs J which engage with the ratchets, as shown, and may be held to place by gravity or by any suitable superimposed springs.

By the above construction it will be readily understood that as the pump-rod A moves up and down the beam B is vibrated upon its pivot, and an alternating reciprocating motion is given to the beams C and C′. These in turn vibrate the dog-carrying links with alternate motions, so that while the one by means of its dog is rotating its ratchet, and with it the driving-wheel, the other is being depressed, carrying its dog back for a fresh engagement with its ratchet, and vice versa. Thus a constant revolution is imparted to the driving-wheel G in one continuous direction.

By means of the adjustability of the links I in the slotted blocks D either dog may be given a greater or less amount of play, and so either the up or the down stroke of the pump-rod may be favored, as desired. This same object may be accomplished by rendering the pump-rod or the beams C C′ laterally adjustable.

I prefer that the driving-wheel should have sprockets upon its periphery, so that a chain may be used for communicating motion to the driven machinery, instead of belts, though the latter may be used, if desired.

I do not wish to limit myself to the precise construction and arrangement shown, as this may be varied without departing from my invention. For instance, the pump-rod, instead of being coupled to the beam B at a point between its pivot and that of one of the beams C or C′, may be coupled to an extension of the beam beyond either of the beams, so as to ob-

tain a longer leverage and greater power, though at a sacrifice of the length of stroke of the dogs; also, instead of ratchet-wheels and dogs, spring-clutches might be employed, or the wheels H might have smooth peripheries and friction gripes or rollers be used.

Having thus fully described my invention, I claim—

1. In a power-converter, the combination, with a driving-wheel whose shaft is provided with ratchets arranged on each side of the driving-wheel, of a vibrating pivoted beam actuated by the reciprocating rod and carrying at its ends beams provided at their lower ends with dogs and connecting mechanism, substantially as described, whereby the vibration of the pivoted beam causes a continuous revolution of the driving-wheel.

2. In a power-converter, the combination, with the ratchets H and the beams C C′, of the links I, provided with dogs J, and adjustably connected to the beams by the slotted pivoted blocks D and set-screws *f*, substantially as described.

3. In a power-converter actuated by a reciprocating prime mover, the driving-wheel provided with sprockets or engaging-points for a driving-chain, substantially as described.

HENRY CROFT, JR.

Witnesses:
W. A. SCOTT,
M. J. SCOTT.