Oct. 27, 1942. F. D. SHUCK 2,300,018

LADDER STRUCTURE

Filed April 5, 1941

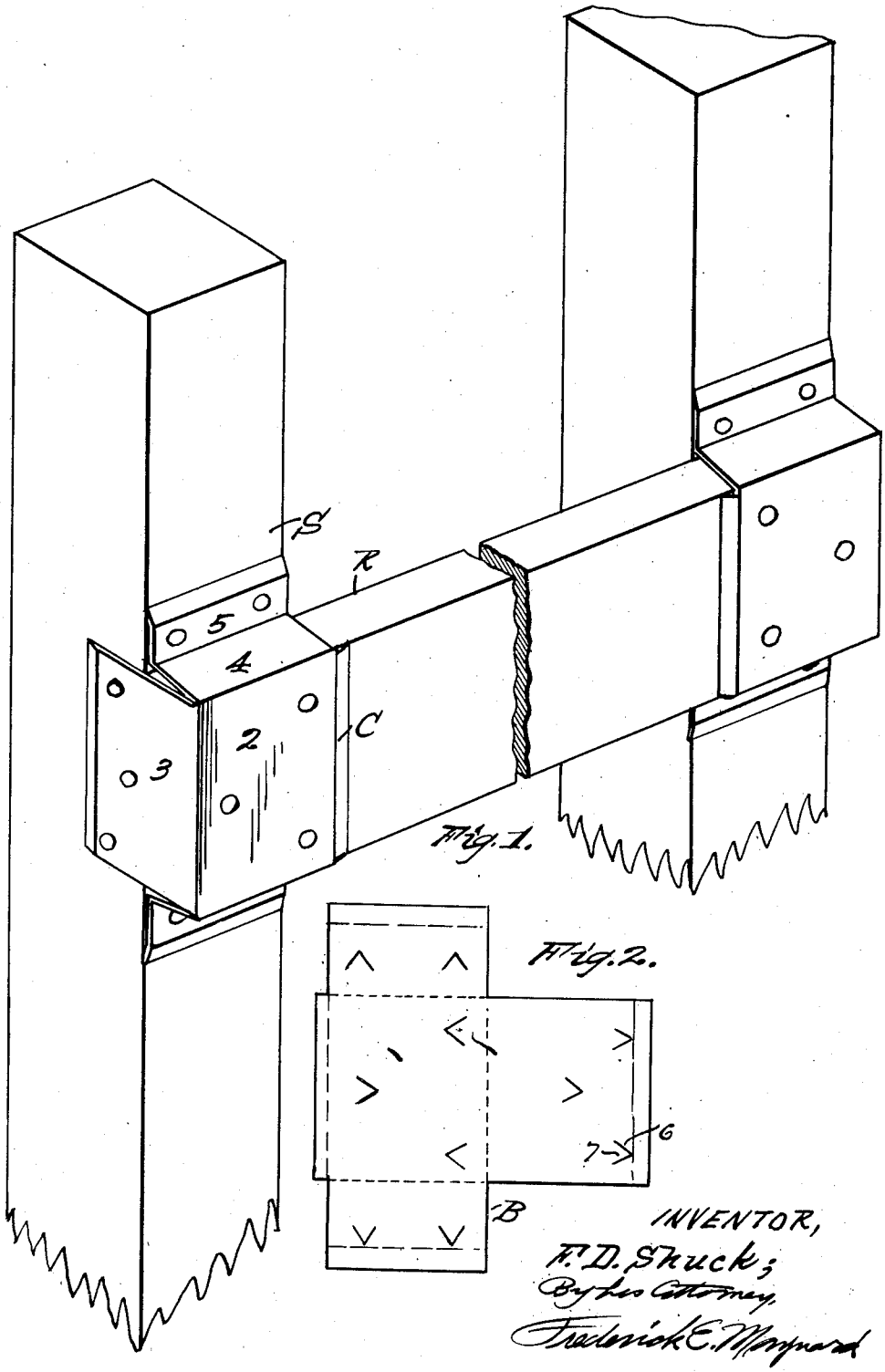

Fig. 1.

Fig. 2.

INVENTOR,
F. D. Shuck;
By his Attorney,
Frederick E. Maynard

Patented Oct. 27, 1942

2,300,018

UNITED STATES PATENT OFFICE

2,300,018

LADDER STRUCTURE

Francis D. Shuck, Santa Monica, Calif.

Application April 5, 1941, Serial No. 387,037

2 Claims. (Cl. 228—58)

This invention is a ladder structure and more particularly is a means for attaching rungs or rounds to un-notched faces of posts or stiles of ladders.

There is in considerable extent of use a common form of ladder made up of 2 x 4" (two by four inch) wooden posts or stiles and the outer faces of these are mortised at suitable intervals and the ends of wooden rungs are countersunk flush in the mortises and nailed in place. Thus if the rung is one inch thick there is a toe space back of the rung three inches deep to the back face of the stiles. If such a ladder is fixed vertically as in a mine shaft or pit with its back face close to the wall then a foot of a climber on the ladder may reach back three inches over the rung. This dimension of foot reach has been adopted as necessary to make a ladder legal in some jurisdictions.

In such a mortised rung ladder the nails are driven directly through the end margins of the rungs and owing to loads imposed and to weathering these wooden rungs soon spit just at the nails or for full length. Often the splits frequently fall out and leave a full loss of step at that position in the ladder. The present invention has for an object to provide a device which will enable the safe use of a piece of scantling of 2 x 3 inch dimension and still come within the specification for toe space as is required in some localities and to avoid the use of mortised 3 x 4 inch stock for ladder stiles.

Another object of the invention is to provide a simple, low-cost, one piece stamped-metal box device for the ready reception of the near end of a given flat, wooden rung and whereby to rigidly affix the rung end in a lapped position of the front face of the stile of the ladder.

Also, an object is to provide a box or hollow cleat member so designed and made that it will firmly clinch inwardly on the top and bottom edges of the rung so as to greatly reduce the hazard of the rung partially splitting or cracking, and to provide for the effective holding of the splits of a rung as may be due to poor quality of stock or because of shock or overload.

A further object is to provide a box or cleat in which there is incorporated bite-in edges to reduce the hazard of cutting or scratching the hands of individuals having to go up or down the ladder.

Additionally, an object is to provide a box of cleat type having partially punched holes for nails and which have tongues at the holes designed and constructed to cause the nails to take an inclined pitch favorable to a tensioning function in securing a box to a stile, runner or post of a ladder and to effectively bind on the interposed rung end.

The invention consists of certain advancements, in the ladder building art, as set forth in the ensuing disclosure and having, with the above, additional objects and advantages as hereinafter developed, and whose construction, combination and details of means, and the functions involved, will be made manifest in the following description of the herewith illustrative embodiment; it being understood that modifications, variations and adaptations may be resorted to within the scope, spirit and principle of the invention as it is more particularly claimed presently.

Figure 1 is a perspective of the box or cleat device as applied to a flat rung lapped onto the face of a 2 x 3 inch stile.

Figure 2 is a plan of a blank from which the box is shaped up.

In mine, and trench, and ditch work a ladder made of posts of 2 x 4 in wood and having one inch thick rungs will stand a very heavy load, especially when back-braced to formation or other supporting agent. If a 4-inch deep post is mortised an inch deep to receive the end of the rung there is left a three-inch toe clearance and in some jurisidictions this is the minimum; by ordinance or law.

Under conditions prevailing currently it is highly desirable to provide a means which enables the legitimate use of smaller dimension of stock for the ladder posts, and by making a lighter ladder providing a more economical use of ladder nails during installation. The instant invention accomplishes these purposes and saves the high cost of labor involved in the mere job of mortising the 2 x 4 posts or stiles, and as here shown the device consists of preferably a piece of stamped and shaped sheet-metal the flat blank of which is shown at B, Fig. 2. Owing to the peculiar structure of the shaped device or cleat C, Fig. 1, it may be made of quite light-weight sheet metal; the cost of the complete cleat or box C being far less than the cost of hand-cutting each mortise in the ladder stile.

The box consists of a central, frontal wall or panel 2 of about the same width as a given rung R to be lapped on the front face of the ladder stiles S. Along the outer lateral edge of the panel there is a rearwardly bent, end closure or wall 3 to lap over the end face of the applied rung and of such depth as to lap well back on the outer

side face of its relative stile S. Along the top and bottom margins of the panel 2 there are rearwardly bent tension limbs or flanges 4 the depth of each of which is a little less then the depth of the applied rung, and these flanges are slightly outwardly inclined so as to facilitate close nesting of the boxes one in the other, for packing, storing and shipping space and cost economy.

The longitudinal edges of the tension flanges 4 are provided with nailing lips 5 which are bent more or less parallel to the panel and to the face of the stile.

The box thus has two open sides; one to receive the interposed end of a rung R longitudinally and the outer facing the stile and receiving the rung from the back of the box. The panel 2, the end wall 3 and the lips 5 are all shown as having V-shaped apertures 6 along intruding V-shaped tongues 7 the purpose of which tongues is to forcibly direct an inserted nail in a somewhat oblique direction such as to place a tension especially on the parts 3 and 4 as the box is nailed to the stile. This toe-nailing pitch of the nails is well known to have a highly efficient fastening effect.

It will be seen that the closed-end box B here shown will effectively hold a rung in place against end shift and up or down play even if the nails are not driven through the panel 2; the lateral closure or wall 3 forming a stiffening bracket or brace in the box structure.

To avoid the presentation of raw edges of the box the longitudinal margins of the parts 2, 3 and 5 are slightly bent in a direction to be effective to bite into the wood when the fastening nails are driven in.

In application of the box one end of a rung is placed in the box and the assembled rung and box are lapped onto the face of the stile, and one or two nails are driven into the lower lip 5, to any suitable degree. Then nails are driven full depth through the upper lip and into the stile. This places some tension on the upper flange 4 to firmly draw the rung against the stile. The nails in the lower lip 5 can now be driven fully home to place the lower flange under full tension.

Nails can now be driven fully home through the front panel 2 and into the rung and stile, if so desired or they may be omitted. Omission of the nails has the advantage that it reduces the tendency to split the rung either as a result of puncture by the nails, or because of load transferred to the nails when load is placed on the top of a rung. In an un-punctured rung its undiminished load capacity is available to transmit the load directly to the bottom flange 4 of the applied box.

Finally nails are driven through the stile-lapping portion of the end closure 3 to close over the end of the rung and to highly brace the upright front panel 2.

It will be seen that by means of the box B it is possible to make ladder stiles of 2 x 3 inch stock and fully comply with requirements specifying a legal ladder with a three inch toe clearance.

What is claimed is:

1. A ladder rung fastener consisting of a front wall to lap on the outer face of an applied rung, top and bottom flanges bent rearward from the opposite ends of the said wall and being of slightly less width than the thickness of the given rung and nailing lips along the said flanges, the said flanges forming tension parts to hold down the lapped and nailed rung, and a lateral wall bent rearwardly from the outer side of the front wall and adapted to cover the rear end of the applied rung and being fixable to the lateral face of a stile to which the rung is lapped.

2. In a ladder structure; stile members, rung elements lapped on the outer faces thereof, rung end boxes forming pockets to receive the end portions of said rungs, each of said boxes formed with side flanges and an end flange to cover the upper, lower and end faces of the end portions of a rung, the side flanges having nailing lips along the outer margins thereof, and the end flange being of such length as to lap the outer face of a stile to provide a portion for attachment to the stile.

FRANCIS D. SHUCK.