July 4, 1950 E. M. ERWIN 2,513,926

QUICK-RELEASE CABLE BINDING FOR SKIS

Filed March 15, 1948

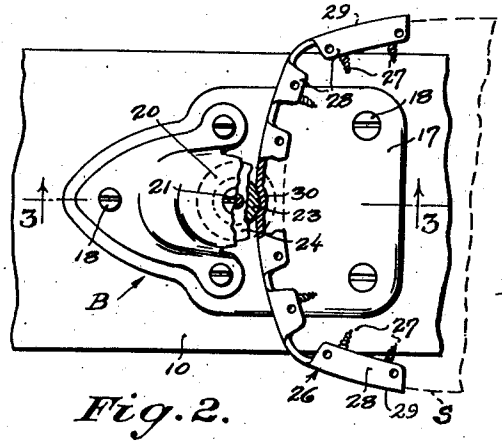

Fig. 2.

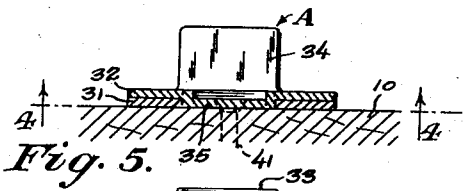

Fig. 5.

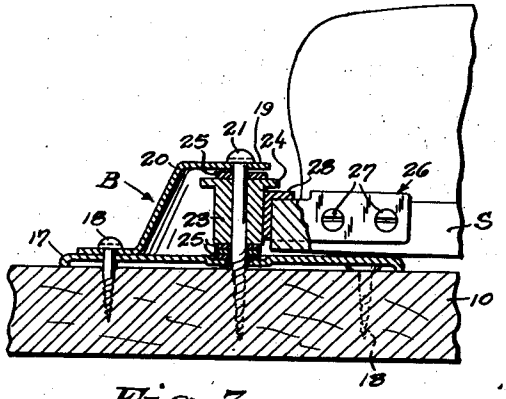

Fig. 3.

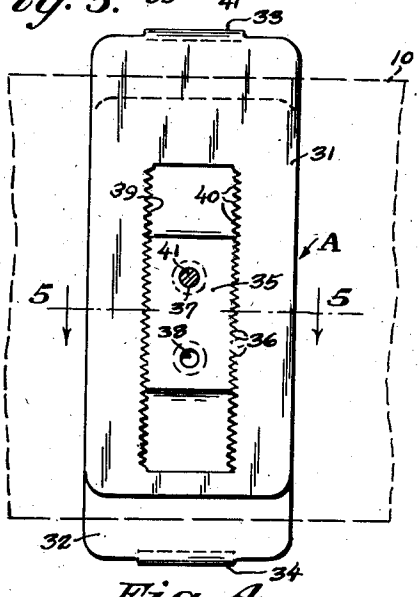

Fig. 4.

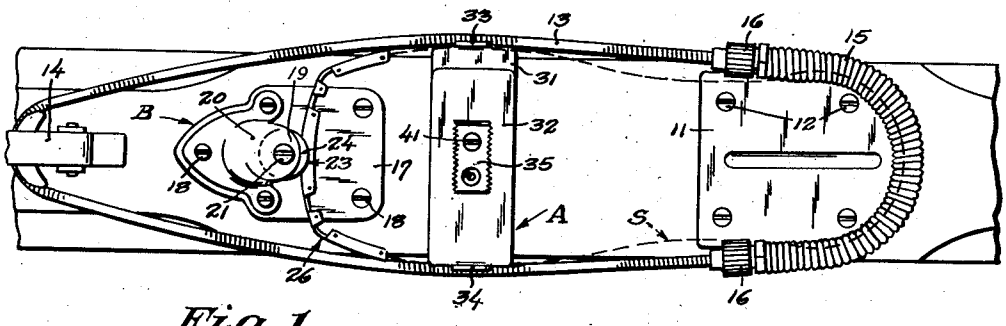

Fig. 1.

INVENTOR.
EUGENE M. ERWIN
BY Edward C. Bonnet
ATTORNEYS.

Patented July 4, 1950

2,513,926

UNITED STATES PATENT OFFICE

2,513,926

QUICK-RELEASE CABLE BINDING FOR SKIS

Eugene M. Erwin, Seattle, Wash., assignor to Sidney Gerber, Seattle, Wash.

Application March 15, 1948, Serial No. 14,936

7 Claims. (Cl. 280—11.35)

1

This invention relates to ski-cable-bindings, and which is to say the bindings by which the boot is attached to the ski.

As one object, the invention aims to provide a binding giving a secure grip for the boot and which embodies a perfected instrumentality for holding the toe of the boot enabling the boot to be freed substantially instantaneously by lateral shifting of the toe. More particularly stated, it is an object of the invention to devise a ski binding the toe-holding means of which serves normally to firmly localize the toe but yet permits the boot to be freed of its localizing restraint by force of foot-twisting pressure exceeding a predetermined maximum beyond which likelihood of danger to the skier is present.

It is a still further and important object to so construct the toe-holding means as to cause the same, when given a lateral movement of the toe in the slight degree necessary to free the latter of its localizing restraint, to thereupon promote rather than retard continued lateral movement of the toe.

The invention has the yet further object of providing a ski binding incorporating a sole grip of improved design and one which, more especially, lends itself to pivotal movement in compensation of the lateral release of the toe.

As a further object still, the invention aims to provide a ski binding embodying a cable and a connecting heel-engaging spring arranged by the tension of the spring to yieldingly urge the toe against the toe-holding means, and wherein means for tensioning the spring are incorporated in and constitute the connection between cable and spring.

The invention further aims to improve the binding toward the end of providing a simple and inexpensive construction, and one capable of being installed with ease and expedition, which is of smooth design, and which is of unusually neat appearance.

Still other and yet more particular objects and advantages will, with the foregoing, appear and be understood in the following description and claims, the invention consisting in the novel construction and in the adaptation and combination of parts hereinafter described and claimed.

In the accompanying drawing:

Figure 1 is a top plan view of a ski fitted with a cable binding constructed in accordance with the now-preferred embodiment of the present invention, the showing being fragmentary in its illustration of the ski and there being incorporated in the view a dotted-line representation of a ski-boot held by the binding.

2

Fig. 2 is a fragmentary top plan view of only the toe-holding elements of the binding, the scale here employed being enlarged from that of Fig. 1, and parts being broken away and shown in section.

Fig. 3 is a longitudinal vertical sectional view on line 3—3 of Fig. 2 with the boot represented in full lines and with the nosing piece which attaches to the toe of the latter being shown partly in elevation.

Fig. 4 is a fragmentary horizontal sectional view taken to a yet larger scale on line 4—4 of Fig. 5, this view being confined to an illustration of the sole-grip and being substantially an underside plan view thereof other than for its sectional showing of the screw by which the same is attached to the ski; and

Fig. 5 is a longitudinal vertical section on line 5—5 of Fig. 4.

Referring to said drawings, the ski is designated by the numeral 10, and according to the present invention the accessories which are attached thereto for binding the boot to the ski comprise a sole-grip A applied to substantially span the ball of the wearer's foot at the widest point of the boot's sole S, a toe-stop or toe-hold B disposed forwardly therefrom, and a binding cable 13 bent upon itself and passing by its bight around a throw-lever 14 placed to the front of the toe-stop, the two strands of the cable extending rearwardly along opposite sides of the ski and having the rear ends yoked by a looped coil spring 15 which is arranged, in use, to bear against the heel of the boot and exert yielding tension upon the latter for drawing the boot forwardly against the toe-stop. While not essential to the working of the invention, the accessory fittings desirably also include a plate 11 serving as a rest for the heel and secured, as by screws 12, to the ski. The cable 13, the throw-lever 14 therefor, and the yoking spring 15 are conventional excepting that, in lieu of forming the throw-lever with a severalty of longitudinally spaced holds and hooking the bight of the cable over these holds, selectively, for the purpose of increasing or decreasing the tension of the heel spring, I accomplish this adjusting function by swivel-mounting a nut 16 upon each end of the spring and forming these nuts with internal threads which work along spiral convolutions inherent to the surface structure of the cable strands.

In respect of the toe-stop B, there is provid-

ed a base plate 17 fixed by screws 18 to occupy a position central to the width of the ski, and firmly secured in surmounting relation upon the frontal part of this plate is a hood 20 open to the rear. The top wall 19 of the hood is given an overhang in respect of its anchoring base, and piercing this overhanging wall at a point central to the width is a screw-hole which, with a vertically aligned screw-hole formed in the base plate 17, accommodates a relatively long wood-screw 21 having its threaded end anchored in the ski. The exposed upper shank of said screw, and namely the part thereof which extends between the base plate and the head wall of the surmounting hood, is smooth-faced, and journal-mounted for rotation upon this exposed shank is a roller 23 characterized by its provision of a peripheral flange, as 24, at the upper end. The axial length of the roller is appreciably less than the spacing between said base plate and the hood's overhanging wall 19, and there is applied interchangeably above and below the roller a severalty of washers 25. The object in interchanging these washers is to enable the roller to be shifted upwardly or downwardly, and the governing factor is the thickness of the boot sole, all of which will be clearly understood in course of the following description of a metal toe-guard, designated 26, serving as an adjunct of the roller and which is permanently secured to the boot.

This toe-guard is in the nature of a nosing strip and is applied along the frontal face of the sole S with its two ends being bent backwardly over the flanking sides of the toe, the guard being secured by counter-sunk screws 27 and being also provided along the upper edge with inturned tabs 28 which hook over the upper edge of the sole and are tacked thereto. There is provided within the length of this toe-guard a deforming indentation 30 arranged, when the guard is applied to the boot, to lie more or less central to the width of the boot, and in the normal use of the ski this indentation seats snugly against the roller.

Proceeding now to describe the sole-grip A, the same is composed of two plates 31 and 32 arranged in their application to lie transverse to the ski with one superposed upon the other, and with each said plate presenting upon an end opposite to the other an upstanding ear, as 33 and 34, the ears functioning as jaws and being adapted to grip the sole of the boot therebetween. The upper of the two plates has a rectangular center section 35 struck downwardly from the body of the metal and in the process of stamping there is formed along each of the two side edges of such depressed section a series of teeth 36. Said depressed section is also pierced with a pair of longitudinally spaced screw-holes 37 and 38 each counter-sunk from above. The other of the two plates presents a slot 39 corresponding in point of its width to the width of the depressed section but of a length considerably greater than the latter, and there is cut along the side margins of this slot a series of teeth 40 arranged to mate with the teeth 36. When mounting the sole grip upon the ski, the two plates are each first shifted endwise to one another in the degree necessary to closely conform to the widest point of the wearer's boot sole. The teeth are interlocked in this position, and said assembled plates 31 and 32 are then centered upon the ski and one securing screw, as 41, is threaded into the ski by inserting the same either through the hole 37 or 38, employing the screw-hole which lies nearest the longitudinal center line of the ski. This screw is taken up in a degree sufficient to hold the two interlocked plates firmly upon the ski.

It should, perhaps, be here pointed out that the procedure in applying the toe-guard 26 is to place the same centrally upon the toe of the sole, then bring the toe and its loosely applied guard forwardly against the roller, lodging the roller within the indentation 30 and applying forward pressure upon the sole by placing the spring 15 in position behind the heel and tensioning the same by use of the throw-lever 14. The user should make certain that the ski boot is properly placed and in exact alignment with the ski, whereupon the wings 29 of the toe-guard (see Fig. 2) are bent backwardly into snug-fitting engagement with the flanking sides of the toe and the screws and tacks are applied, each of the several screw-holes of this guard being so placed as to expose the same for ready access and hence allow the screws 27 to be easily threaded into the sole without removing the boot from the cable binding.

In the use of the ski, it will be apparent that the ease with which the roller will slip out of the pocket-forming notch 30 under force of lateral pressure will be governed by the tension of the spring 15, the knurled nuts 16 providing an unusually fine adjustment to enable the user to obtain substantially the exact tension desired. For the novice skier, the tension should be made only so tight as to assure that the boot will hold position when a kick turn is being executed. The experienced skier requires more tension.

While not illustrated in the drawing, the fittings for the ski incorporate the usual low-hitch attachments which are screwed to the sides of the ski below the projecting ends of the sole grip. It will perforce be understood that the sole grip, while it is normally held more or less firmly to the ski, will be caused to pivot about its single securing screw 41 as an axis coincident with a lateral freeing of the toe-guard 26 from the localizing influence of the roller, the roller, in consequence of its permitted rotation, offering no resistance and in fact promoting such lateral movement once the roller clears the notch in which it normally seats.

The invention and the manner of its operation is thought to be clear from the foregoing detailed description of my now-preferred embodiment. It is self-evident that changes in the details of construction may be resorted to without departing from the spirit of the invention and I therefore intend that no limitations be implied and that the hereto annexed claims be read with the broadest interpretation which the employed language fairly permits.

What I claim is:

1. In a quick-release binding for holding a boot upon a ski, the boot being characterized in that the toe part of its sole presents an indentation in the front face extending normal to the plane of the sole and placed approximately central to the width of the toe, a member mounted upon the ski for swivel movement about a vertical axis located on the approximate longitudinal median line of the ski and arranged to lodge in said indentation for holding the toe against lateral movement in the absence of a lateral force of predetermined intensity, and tensioned means exerting its thrust in a direction endwise to the

ski and serving to yieldingly hold said member in seated engagement within the indentation.

2. In a quick-release binding for holding a boot upon a ski, the boot being characterized in that the toe part of its sole presents a vertical notch placed approximately central to the width of the toe, a roller arranged to lodge in said notch and journal-mounted from the ski for rotation about a vertical axis, and tensioned means exerting thrust in a direction endwise to the ski and functional upon the boot to yieldingly hold the notch in seated engagement against the roller.

3. A quick-release binding according to claim 2 in which the notch is formed in a guard strip secured as a fixed nosing upon the toe of the sole.

4. A quick-release binding according to claim 2 characterized in that the roller is held against endwise movement and presents a flange upon its upper end arranged to overlie the toe of the sole and hold the latter against vertical displacement relative to the ski.

5. A quick-release binding according to claim 4 having means for placing the roller in selected vertically adjusted positions whereby to change the position occupied by the flange.

6. In structure for holding a boot upon a ski, a sole grip comprising complementary plate members superposed one upon the other and arranged when applied to the ski to have their major axes extend transverse to the latter and with each said plate providing an upstanding ear upon an end thereof opposite to the other, said plates being stamped from metal with the upper said plate having a center portion struck downwardly from the body of the metal, said depressed center portion being formed along each of its side edges with a series of teeth, the lower plate presenting a longitudinal slot of greater length than said depressed portion admitting to the reception of the latter therein and formed along each of its side edges with a series of teeth matching the teeth of the depressed portion, means being provided for attaching the sole grip to the ski.

7. The structure of claim 6 in which the means last recited comprises a pair of screw-holes piercing said depressed portion of the upper plate at spaced intervals of the length thereof, and a screw therefor arranged to be applied alternatively through a selected one of the two screw-holes.

EUGENE M. ERWIN.

REFERENCES CITED

The following references are of record in the file of this patent:

UNITED STATES PATENTS

Number	Name	Date
2,100,666	Muller	Nov. 30, 1937
2,144,021	Kiener	Jan. 17, 1939
2,236,874	Hvam	Apr. 1, 1941
2,364,620	Crocker et al.	Dec. 12, 1944
2,383,064	Lanz	Aug. 21, 1945
2,468,879	Hvam	May 3, 1949

FOREIGN PATENTS

Number	Country	Date
136,678	Australia	Feb. 26, 1934