C. I. HALL.

CLOCK DRIVEN CONTROLLER.

APPLICATION FILED JULY 15, 1911.

1,156,400.

Patented Oct. 12, 1915.

2 SHEETS—SHEET 1.

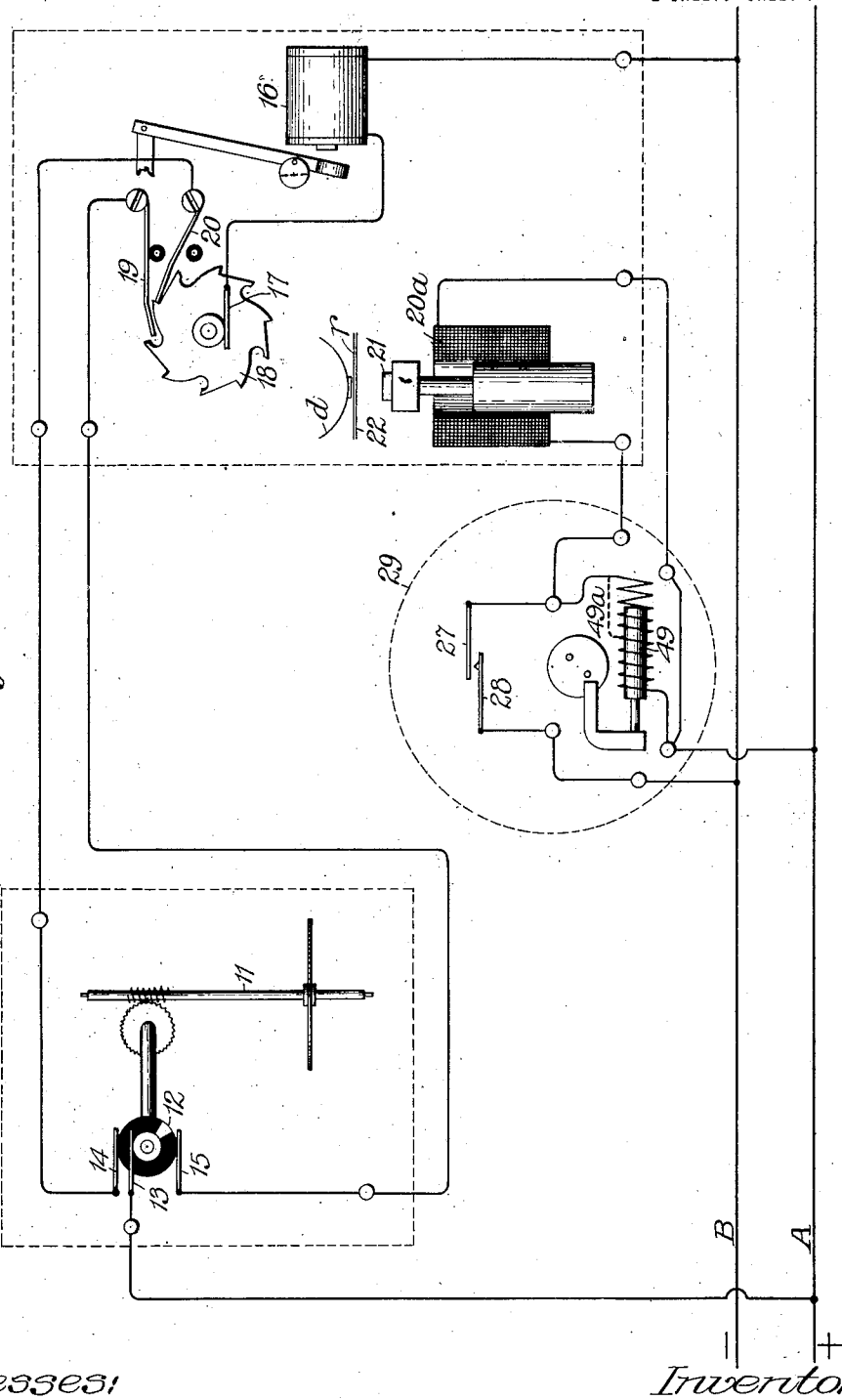

Fig. 1.

Witnesses:
Leonard W. Novander.
Robert L. Bracke

Inventor:
Chester I. Hall
By Brown & Williams
Attorneys

C. I. HALL.

CLOCK DRIVEN CONTROLLER.

APPLICATION FILED JULY 15, 1911.

1,156,400.

Patented Oct. 12, 1915.

2 SHEETS—SHEET 2.

Fig. 2.

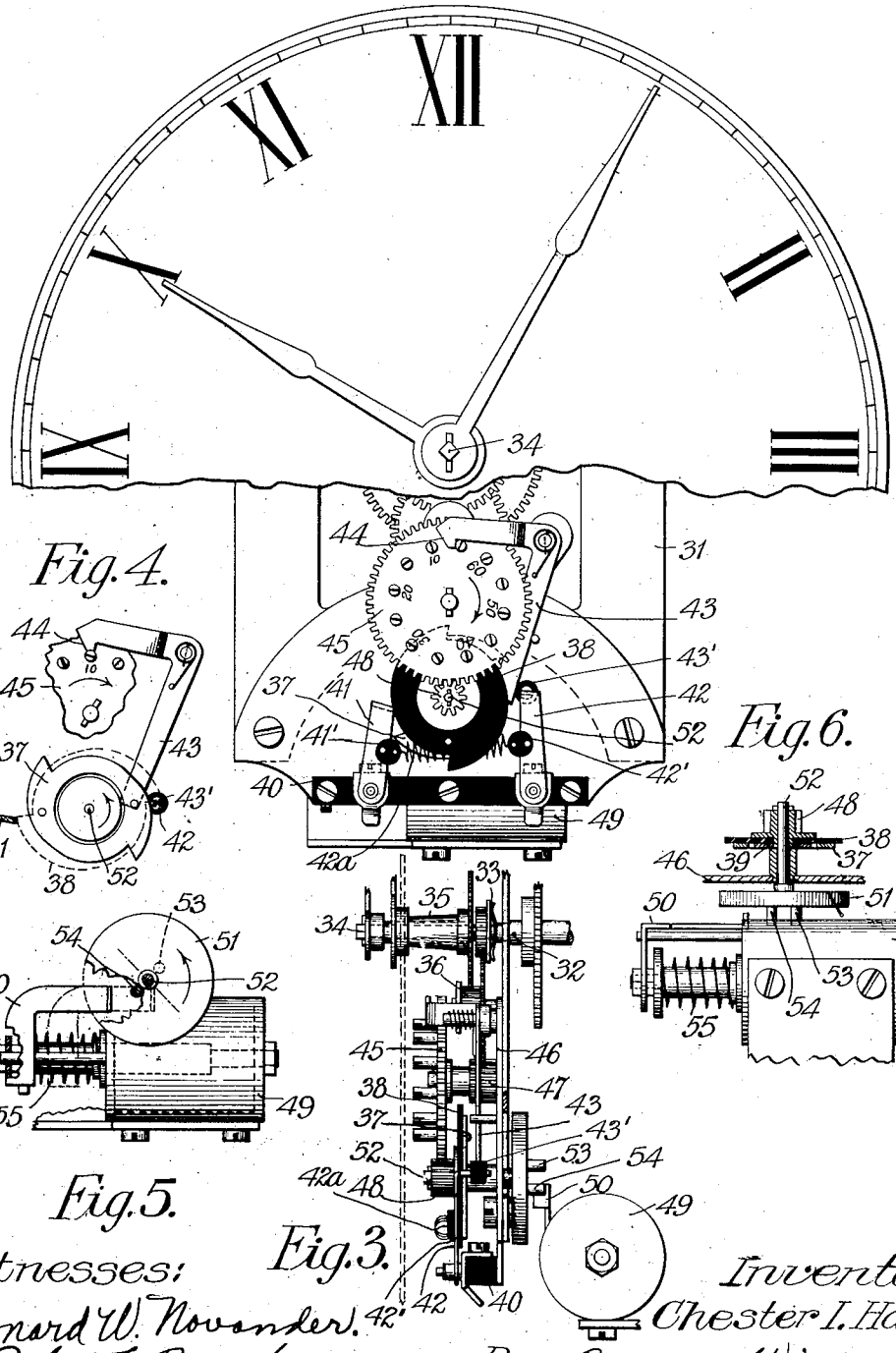

Fig. 4.

Fig. 5.

Fig. 6.

Witnesses:
Leonard W. Novander.
Robert F. Bracke

Inventor
Chester I. Hall
By Brown & Williams
Attorneys

UNITED STATES PATENT OFFICE.

CHESTER I. HALL, OF CHICAGO, ILLINOIS, ASSIGNOR, BY MESNE ASSIGNMENTS, TO CHICAGO ELECTRIC METER COMPANY, OF CHICAGO, ILLINOIS, A CORPORATION OF ILLINOIS.

CLOCK-DRIVEN CONTROLLER.

1,156,400. Specification of Letters Patent. Patented Oct. 12, 1915.

Application filed July 15, 1911. Serial No. 638,661.

To all whom it may concern:

Be it known that I, CHESTER I. HALL, a citizen of the United States, residing at Chicago, in the county of Cook and State of Illinois, have invented a certain new and useful Improvement in Clock-Driven Controllers, (Case 5,) of which the following is a full, clear, concise, and exact description, reference being had to the accompanying drawings, forming a part of this specification.

My invention relates to circuit controllers and more particularly to time-driven controllers which serve to close an electric circuit in a predetermined interval of time.

My invention comprises a clock-driven controller which serves to close an electric circuit for a period of time at the end of every such period for which a record is to be made. The circuit controlled by this clock mechanism leads to an electromagnetic device which when energized causes the reading of a set of numeral wheels to be printed upon a strip of paper which is automatically fed between them and an associated platen. The actuation of the numeral wheels is controlled by a wattmeter, there being provided in conjunction with the wattmeter a small commutator or circuit closer which controls the energization of an electromagnet adapted by its actuation to advance the printing wheels. The result of the combination is therefore that the wattmeter controls the advancement of the printing wheels whereas the clock controls the time at which the impressions are made upon the record strip of paper. In conjunction with the watt printing wheels there is a type wheel for printing the time at which the impressions are made. It is ordinarily unnecessary to print the minutes at which the readings are printed because with the hourly indications printed in conjunction with the wattmeter readings, it is a simple matter to interpolate to learn the time at which any intermediate record is printed. All of the mechanism for controlling the closure of the time circuit is driven from the quill on the hand side of the friction of a clock movement, thus making it possible to set the time of the circuit closing mechanism merely by setting the hands of a clock. Furthermore, all of the clock-driven circuit controlling mechanism is made up in the form of a self-contained unit wheel which is easily fastened to a standard clock movement. It is possible, therefore, to make up the circuit controlling mechanisms and put them in stock, thus making it necessary to purchase clock movements only as fast as sales demand. It would be but a moment's work to attach the circuit controlling mechanism as the complete apparatus is shipped. The circuit controlling mechanism is so arranged as not to interfere with the time keeping or indicating function of the clock, and the device, therefore, becomes a very convenient power-house accessory in that the time of day is indicated by ordinary clock hands. The circuit controlling switch of the clock-driven mechanism is arranged to require a minimum of power. The contacts are, however, arranged in such a way as to have a quick and wide break, thereby reducing arcing and consequent burning of contacts to a minimum. These contacts are arranged to wipe over one another thereby keeping them bright. The contacts are arranged in such a way as to insulate the clock movement from the electric circuit. Notwithstanding this arrangement, however, the contacts may be adjusted to confine the arcing and burning to one of the pair of contacts which are periodically broken in the operation of the device, although the contact mechanism of the time circuit controller is so delicate that such an extremely small amount of power as is available from a clock will drive it. Still the snap action of the switch points when opening the circuit is so successful that no condenser is needed to bridge the gap and thus to cut down the arcing. This, of course, effects a considerable saving in the cost of the apparatus when manufactured in quantities. The time circuit controlling apparatus being readily detached from the clock, may be shipped in for repairs if needed, a duplicate clock attachment having been sent to the customer to replace the device which must needs undergo repairs. This is a great convenience because it saves the shipment of large and bulky clock mechanism which is also certain to get out of time-keeping adjustment in transit.

Having thus pointed out some of the features of my invention, I shall proceed to give a more detailed description, having reference to the accompanying drawings, in which—

Figure 1 illustrates diagrammatically the

electrical circuits and the electromagnets controlled thereby; Fig. 2 is a front view of the clock and associated circuit controlling mechanism; Fig. 3 is a side view of the clock and associated circuit controlling mechanism; Fig. 4 is a detail view taken in cross-section just behind the fiber disks of the snap switch and showing the action of the switch contacts when released; Fig. 5 is a sectional view showing the relay mechanism associated with the switch contacts; and Fig. 6 is a view partly in section showing the construction and manner of mounting the rotary switch member of the time circuit controller, also showing a bottom view of the relay associated therewith.

I shall describe the diagrammatic circuit before entering into the description of the mechanism of the clock and controller itself. In this drawing the spindle of a wattmeter is indicated at 11. This wattmeter in turn drives the small and delicate commutator 12, this being associated with a brush 13 riding on a slip ring connected with the commutator segment or segments and also with a pair of alternating brushes 14 and 15. The brush 13 is connected with one of the service mains A and the energizing circuit of the numeral wheel actuating magnet 16 is connected to the other service main B. The circuit of the electromagnet 16 leads through a brush 17 to the saw-toothed connector disk 18. It will be noted that the alternate teeth of this disk are under-cut and this for the following reason: The brushes 19 and 20 are adapted to engage the faces of the teeth where they are not thus under-cut. If now, we trace the circuit from the main A we shall find that it may lead from brush 13 through the commutator to brush 14, thence to the brush 20 on the printing attachment, thence through the contact disk 18 to the brush 17 and thence through the numeral wheel actuating magnet 16 to the negative main B. The closure of this circuit will energize electromagnet 16 to advance the numeral wheels diagrammatically shown at *d* one step. The contact disk 18 being associated with the units numeral wheel, is simultaneously advanced wherefore the circuit previously traced from the brush 20 through the face of a tooth of the contact disk is broken. At the same time a circuit is closed between the brush 19 and the face of the tooth thus brought into engagement with it. The circuit of the electromagnet 16 is not, however, completed until the commutator segment 12 is rotated by the wattmeter into engagement with the brush 15. At this instant, however, the circuit of the electromagnet 16 is again closed to advance the numeral wheel simultaneously to advance the contact disk 18 into position where the circuit through the brush 19 is opened. The electromagnet indicated at 20^a is adapted when energized to force the platen 21 into engagement with the paper strip 22, thus bringing it into sharp contact with the type wheels, a typewriter ribbon *r* intervening to cause the impression to be made in color upon the paper. The circuit of this electromagnet is controlled by time controlling contacts diagrammatically shown at 27 and 28. This diagrammatic actuation of these clock controlled contacts does not correspond very closely with the actual mechanism but the diagram will suffice to show that when the clock indicated by the dotted line 29 brings the contacts 27 and 28 into engagement with one another, the electromagnet 49 is energized and the circuit through the printing magnet 20^a is instantaneously closed, thus causing the platen to come into play to print upon the paper strip the reading of the numeral wheels at the particular instant. Thus, in a general way, will be apparent the operation of the apparatus of my invention. The wattmeter by its commutator controls the advancement of the watt printing numeral wheels. The clock controls the closure of the time circuit to regulate the actuations of the platen to print the readings of the numeral wheels upon the record strip.

Referring now to the details of the clock-driven circuit controller, particular reference will be made to Figs. 2 to 6, inclusive. These views illustrate a clock movement at 31. The power springs, gear trains, balance wheel and regulating mechanism are not shown as these parts have no connection with my present invention. It will suffice, therefore, to say that the uniform movement of the clock train is through the spindle 32. A clock friction 33 intervenes between this spindle and the minute hand spindle 34. The hour hand quill 35 is mounted upon the minute hand spindle and connected by ordinary 12 to 1 gearing with the minute hand spindle. The intermediate gear and pinion 36 is the point of connection for the circuit controlling unit which I have described as a self-contained attachment to be secured to the clock which is to be put into the service of my invention. The vital feature of the switch is the double involute disk 37 of brass or other suitable metal riveted or otherwise secured to the double involute disk 38 of fiber or other insulating material. The center of the metal involute is cut out so as not to engage the metal hub 39 of the fiber disk. There is an angular displacement between the tips of the metal disk and the associated fiber disk with the result that the fiber disk protects the rim of the metal disk except at the diametrically opposite points at which the tips of the metal project beyond the tips of the fiber. A block 40 of insulating material serves as a mount for the pivoted contacts 41 and 42. These contacts are each provided with a piece of insulation

41′ and 42′ to which a spring 42ª is fastened, thus tending to hold these contacts inwardly toward the involute disks. Each contact, furthermore, has a projection bent at right angles to the body of the contact, the projections riding upon the rim of the fiber disk except when the tips of the latter reach points at which the ends of the contact levers drop off and onto the projecting tips of the metal disk. When this occurs an electric circuit is closed between the two lever contacts. This circuit continues closed until one or the other lever drops off the tip of metal and onto the rim of insulating material. The parts are so adjusted that the contact 42 drops off the tip of the metal just slightly in advance of the contact 41, wherefore the arcing and burning is confined to the lever 42 which alone serves to break the circuit. The right-angled upper end of the lever contact 42 is slightly extended to carry a bushing 43′ of insulating material. This bushing is adapted to be engaged by the depending arm of the bell-crank lever 43. The horizontal arm of this lever is provided with a cam surface 44 adapted to be engaged in succession by the pins numbered 10, 20, 30, 40, 50 and 60 in the face of the minute plate 45. This minute plate is pivoted on a suitable stud carried by the back plate 46 of the circuit controlling attachment. A pinion 47 is brought into mesh with the gear of the intermediate idler between the minute and hour hands of the clock and the minute plate is mounted upon the hub with this pinion 47. The periphery of the minute plate is gear-cut to mesh with the pinion 48 which causes the rotation of the involute disks of the switching member. The gear ratios are such that the involute disks make six revolutions during one revolution of the minute plate. The minute plate is provided with a set of twelve equally spaced machine screw holes and into these holes may be screwed one or more of the pins numbered 10, 20, 30, etc. In the drawing all of the twelve pins are in place in the minute plate. The result of the clockwise rotation of the minute plate is to cause the pin marked 10 to engage the cam surface 44 of the bell crank lever, thus rotating this bell crank lever in a clockwise direction against the tension of the comparatively stiff spring mounted on the pivot of the lever. The depending lever 43 being swung to the left, the contact lever 42 is permitted to drop down into engagement with the periphery of the involute disks. When, therefore, the involute disks have rotated to a point at which the tips of the fiber pass the right-angled projections on the contact levers, the latter will drop into engagement with the tips of the brass disks, as previously explained, to close the circuit. Such will be the operation whenever a pin in the minute plate is driven against the cam surface 44 of the bell crank lever. If, say, the pin marked 10 were withdrawn from the minute plate, then the bell crank lever would not be rocked to permit the contact lever 42 to come into engagement with the involute disks. Under the circumstances, the circuit would not be closed notwithstanding the rotation of the involute disks, while the contact lever 41 would drop down into engagement with the metal tip of the involute disk at one side and the circuit would remain open at the diametrically opposite side. The spring 42ª connecting the levers is very light, thereby reducing friction to a minimum, and in so far as the lever 42 is concerned, the lightness of the spring 42ª permits the bell crank lever 43, acting under the tension of its spring, to hold the lever out of engagement with the involute disks.

It will be noted that the tips of the metal involute are considerably under-cut and the right-angled ends of the contact levers are skewed in such a way that when the contact lever drops over the tip of the involute a wide quick gap will be formed to prevent the formation of an arc which might continue the circuit and cause the contacts to be destroyed in but a short while.

When the contact arms 41 and 42 are brought into engagement with the involute 37 it is desirable that there should be a quick action of the contact disks 37 and 38 to make the period of contact as short as possible. To this end I have disposed a solenoid 49 suitably supported from the clock and to the core of which is secured an arm 50 which extends outwardly and toward a disk 51 which is suitably secured to the spindle 52, upon which are mounted the involute disks 37 and 38. The disk 51 is provided with pins 53 and 54 which are alternately disposed in the path of the arm 50 by means of the clock mechanism acting through the minute plate 45 and pinion 48, a spring 55 maintaining said arm in its normal position away from said pins. Now when a circuit is closed through the involute 37 and the arms 41 and 42 (which are shown in Fig. 1 as 27 and 28), current will flow through the electromagnet 49 and through the electromagnet 20ª. This, it will be seen, is practically an instantaneous energization of each of these electromagnets and the involutes 37 and 38 will be rotated approximately ninety degrees because of the engagement of the arm 50 with either pin 54 or 53. Thus the disk 37 engages the contact arms 41 and 42 just for a short moment during which interval the relay 49 is energized and the arm 50 engages one of the pins and throws the involutes forward a sufficient distance to bring the contact arms out of engagement with the disk 37 when the circuit is opened and the clock mecha-

nism continues to rotate the disks 37, 38 and 51 until the circuit is again closed. This movement of approximately ninety degrees of these disks is not more than what will take up the back lash in the gearing mechanism of the clock, and thus the minute or hour hands are not disturbed thereby. It will be obvious that if all twelve of the pins are screwed into the minute plate, the circuit controlled by the switch mechanism will be energized once in every five minutes, the gear ratios being such as to cause a complete revolution of the involute disks once in every ten minutes, and such also as to bring a hole in the minute plate into juxtaposition with the cam 44 once in every five minutes. By omitting alternate pins from the minute plate the circuit closure will be effected once in every ten minutes. If every third pin is inserted in the minute plate, the circuit will be closed every fifteen minutes. If but two diametrically opposite pins remain in the plate the circuit will be closed every half hour. If the circuit is to be closed but once each hour, a single pin will be secured into the minute plate. It will be apparent that the pins may be inserted so as to cause the closure of the circuit desired within the limits of the mechanism.

I have found it convenient in practice to control the time of engagement of the contacts 41 and 42 with the disk 37 by constructing the magnet 49 so that its rapidity of operation may be increased or decreased as desired. If this magnet is sluggish in operation, which condition may result from short circuiting a part of its turns as indicated at 49^a in Fig. 1, the time of energization of the printing magnet 20^a is correspondingly increased since the energizing current flows through the printing magnet until the circuit is opened by the actuation of the controlling magnet 49. If on the other hand, it is desired to make the controlling magnet quicker in operation a less number of its turns may be short circuited, or if desired, a part of its magnetic path may be closed through the air instead of through iron or steel. It is desirable that the controlling magnet be adjusted to maintain a closed circuit through the printing magnet for only such a length of time as is required to positively actuate said printing magnet.

I do not limit myself to the exact mechanical construction shown and described, but may employ equivalent constructions without departing from the spirit of my invention.

I claim as new and desire to secure by Letters Patent:

1. In combination, a pair of line limbs, a bridge between said limbs including a magnetizing coil and a pair of time closed contacts, a watt meter, printing wheels advanced with the operation of said watt meter, electromagnetic mechanism for recording the position of said printing wheels, said contacts adapted for closing a circuit through said magnetizing coil and said electromagnetic mechanism, said magnetizing coil being arranged to open said contacts, and means for adjusting said coil to determine the period of energization of the electromagnetic mechanism.

2. In combination, a pair of line limbs, a bridge between said limbs including a magnetizing coil and a pair of time closed contacts, a watt meter, printing wheels advanced with the operation of said watt meter, electromagnetic mechanism for recording the position of said printing wheels, said contacts adapted for connecting said magnetizing coil and said electromagnetic mechanism in bridge with the line limbs, said magnetizing coil being arranged to open said contacts, and means for adjusting said coil to determine the period of energization of the electromagnetic mechanism.

3. In combination, recording mechanism, electromagnetic devices for actuating said recording mechanism, time controlled mechanism, a pair of contacts closed by said time controlled mechanism to control the energizing circuit of said electromagnetic devices, a magnetizing coil for opening said contacts, and means for adjusting said coil to determine the period of energization of the electromagnetic devices.

In witness whereof, I hereunto subscribe my name this 6th day of July, A. D., 1911.

CHESTER I. HALL.

Witnesses:

ALBERT C. BELL,

ALBIN C. AHLBERG.