M. LEVISON.

SIGNALING DEVICE.

APPLICATION FILED MAY 19, 1911.

1,080,287.

Patented Dec. 2, 1913.

3 SHEETS—SHEET 1.

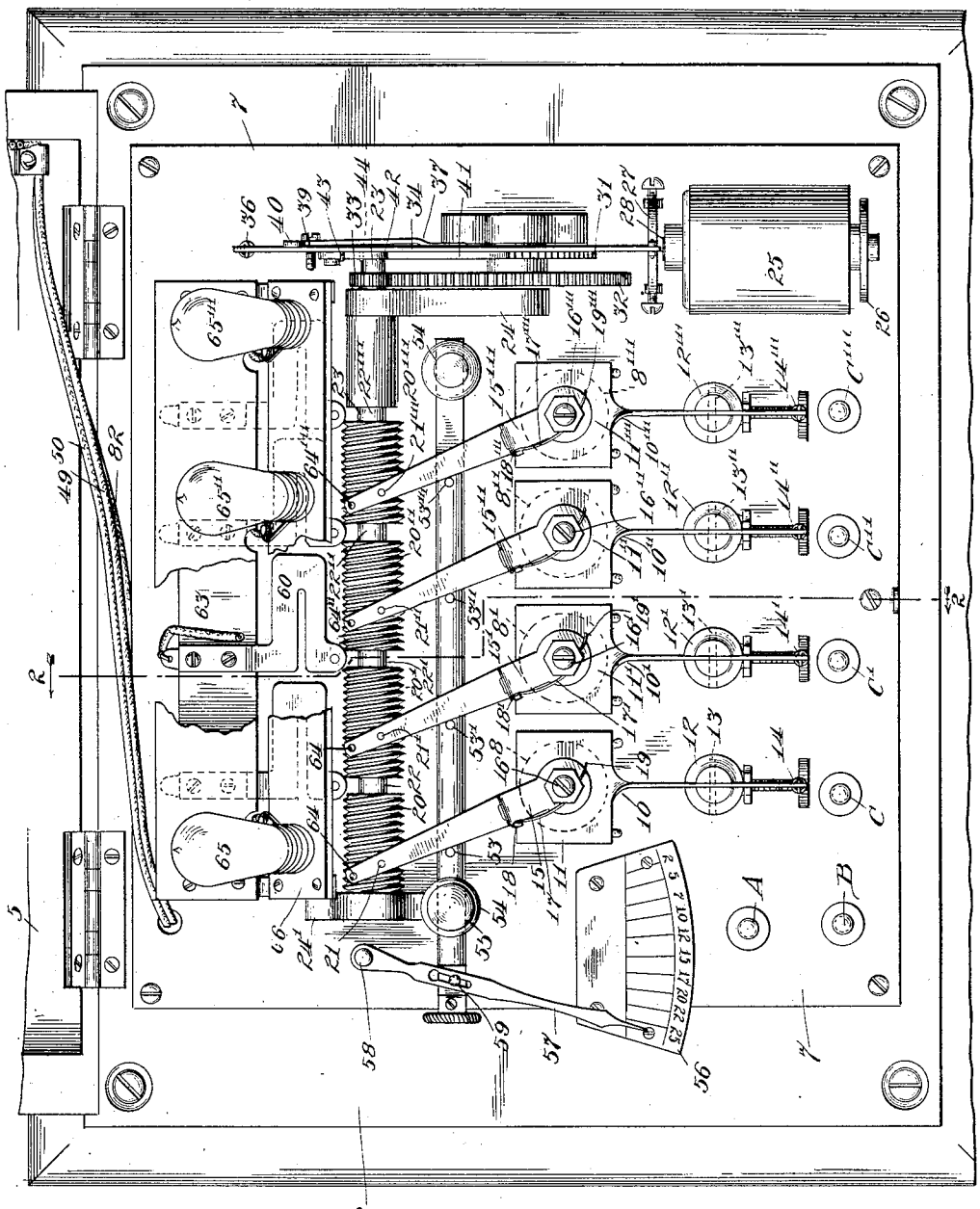

Fig. 1.

Witnesses

Milton Lenoir

William Allen

Inventor

Maurice Levison

by Forée Bain & May

Attorneys.

COLUMBIA PLANOGRAPH CO., WASHINGTON, D. C.

M. LEVISON.

SIGNALING DEVICE.

APPLICATION FILED MAY 19, 1911.

1,080,287.

Patented Dec. 2, 1913.

3 SHEETS—SHEET 2.

Fig. 2.

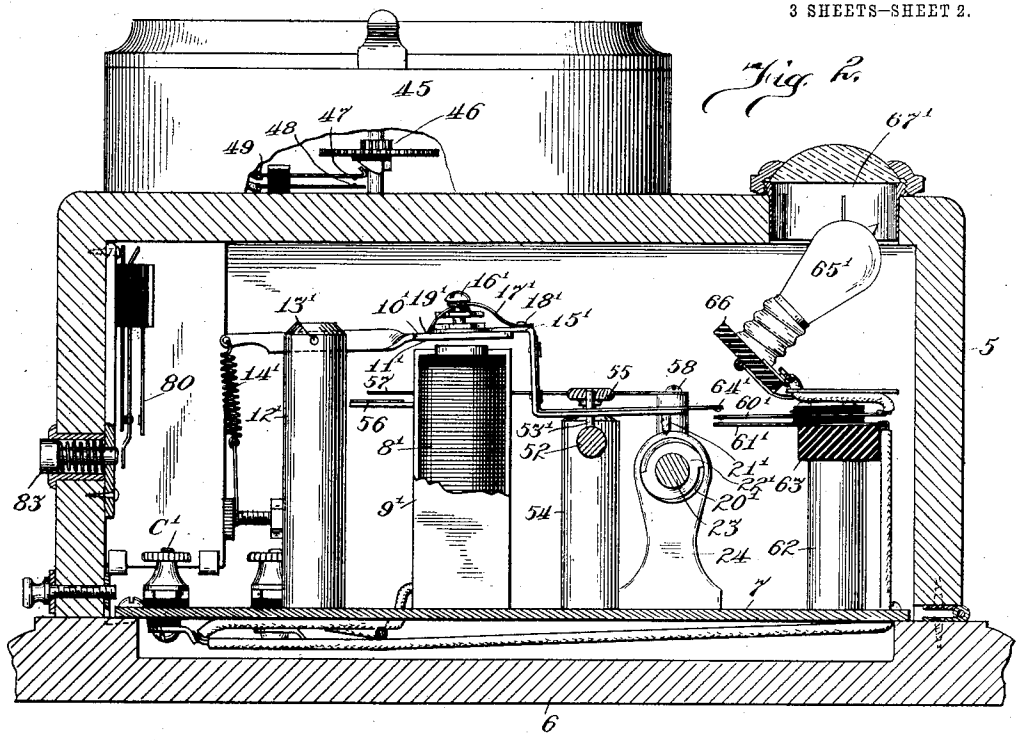

Fig. 3.

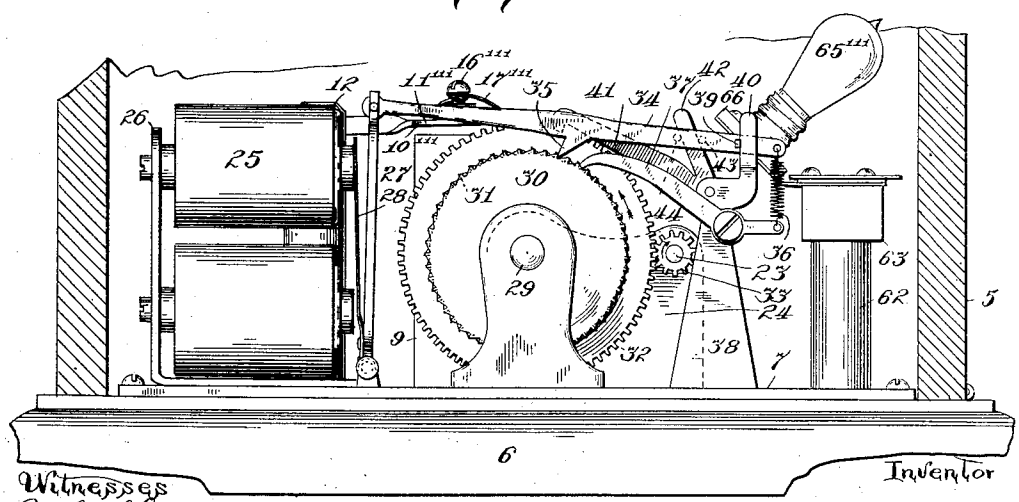

Witnesses
Milton Lenoir
William Allen

Inventor
Maurice Levison
By Paine & May
Attorneys.

COLUMBIA PLANOGRAPH CO., WASHINGTON, D. C.

M. LEVISON.

SIGNALING DEVICE.

APPLICATION FILED MAY 19, 1911.

1,080,287.

Patented Dec. 2, 1913.

3 SHEETS—SHEET 3.

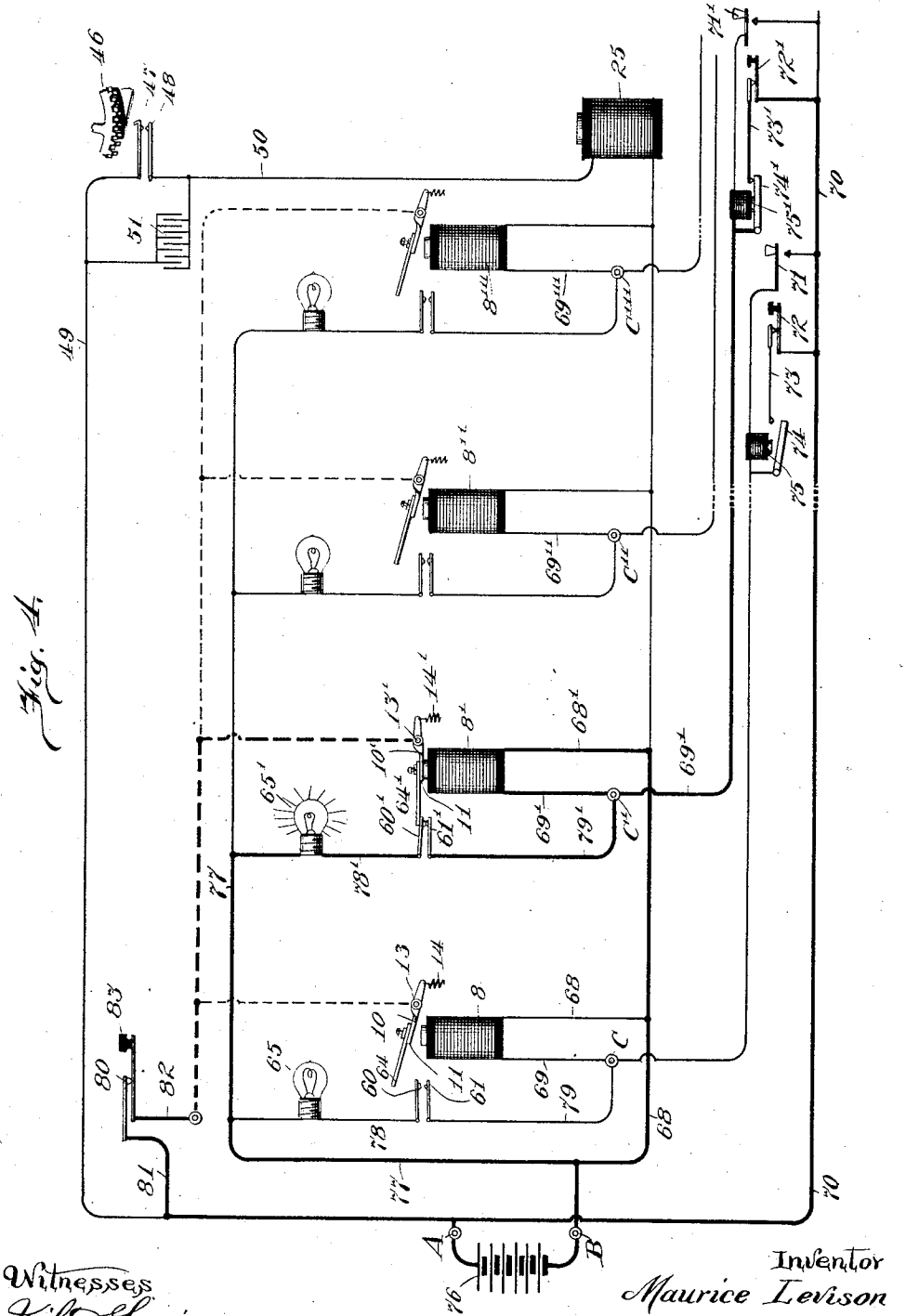

Fig. 4.

Witnesses
Milton Lenoir
W. Linn Allen

Inventor
Maurice Levison
By Goepel Bain & May
Attorneys.

COLUMBIA PLANOGRAPH CO., WASHINGTON, D. C.

UNITED STATES PATENT OFFICE.

MAURICE LEVISON, OF CHICAGO, ILLINOIS, ASSIGNOR, BY DIRECT AND MESNE ASSIGNMENTS, TO CHICAGO SIGNAL COMPANY, OF CHICAGO, ILLINOIS, A CORPORATION OF ILLINOIS.

SIGNALING DEVICE.

1,080,287. Specification of Letters Patent. Patented Dec. 2, 1913.

Application filed May 19, 1911. Serial No. 628,177.

To all whom it may concern:

Be it known that I, MAURICE LEVISON, a citizen of the United States, residing at Chicago, in the county of Cook and State of Illinois, have invented certain new and useful Improvements in Signaling Devices, of which the following is a specification.

My invention relates to improvements in signaling devices, and more particularly to devices for response to changes in a main circuit to actuate an annunciator.

One of the objects of my invention is to provide a device which shall operate effectively to actuate the annunciator only upon maintenance of the changed conditions in the main circuit for a predetermined lapse of time.

Another object of my invention is to provide a novel device capable of effecting such delayed annunciation of changed conditions in a plurality of circuits independently as to each said circuit.

Another object is to provide in such a device means whereby the annunciation, once commenced, will continue independently of conditions in the main circuit, until released by operation of a device located for control by a supervising authority.

Still another object of my invention is to provide in a device of the character described novel means for effecting adjustment of the retard devices for all of the supervised circuits in unison.

Another object is to provide an embodiment of devices of the character described of simple and advantageous construction, and further objects will become apparent to those skilled in the art from a consideration of the following description taken in conjunction with the accompanying drawings.

In the drawings, Figure 1 is an elevation of a device embodying my invention, with the cover open; Fig. 2 is a section on line 2—2 of Fig. 1, with the cover closed and parts broken away; Fig. 3 is an end elevation with the casing in section, taken from the right of Fig. 1, showing the actuating magnet and associated pawl-and-ratchet mechanism; and Fig. 4 is a schematic view showing the electrical devices and circuits with one annunciator in operation.

While my invention is adapted for advantageous use wherever it is desired to annunciate changed condition in a circuit only upon continued maintenance of such condition for a predetermined time, I shall herein describe the device with its advantages as a part of a hospital signal system in mind, the details of such a system being more fully disclosed in my co-pending application Serial No. 621,186, filed April 15, 1911.

For effecting the results above described, my invention contemplates generally the use of electro-responsive means responsive to predetermined changes in a main circuit, a timed part, and a member movable in one direction by the responsive means and in another direction by the timed part, to actuate an annunciator as a result of such dual movement. In the structure herein shown, embodying my invention, I provide an electromagnet for each main circuit to be supervised, a worm rotatable at a predetermined constant rate or "timed speed," an armature for each magnet having mounted thereon a member movable vertically with the armature into engagement with the worm and movable laterally by the worm through such engagement, finally to effect the annunciator-actuating operation, as a result of the joint action of the electromagnet and worm.

Specifically, within a casing comprising cover member 5 and supporting table 6, I provide a metallic base plate 7 screwed to the supporting table and having mounted thereon the annunciator-operating parts of the device. For each main circuit to be supervised, I provide a selector magnet 8, 8′, 8″, 8‴, herein shown as four in number, and provided each with an exterior metallic V shaped pole member 9 (like parts of the respective selector magnets being hereafter distinguished by exponents corresponding with those of the respective magnets). The armature 10 for each selector magnet may be conveniently formed of sheet metal shaped to provide a body portion or armature proper 11, overlying the magnetic pole for attraction thereby and an extension or tail turned at right angles to the body portion, said tail having pivotal bearing in the top of post 12, as at 13, and having secured between its extremity and a point near the bottom of the post a spring 14, normally retaining the armature in retracted position as shown in Fig. 2.

Associated with the armature, I provide a part to be moved when the armature is at-

tracted by its selector magnet and capable of further movement in a different direction from that initially given it by the armature. Specifically, 15 indicates a finger member pivotally mounted on the armature, as upon screw 16 to swing laterally relative to the armature and move vertically therewith, such finger being retained normally in raised position by the retracted armature and in a normal lateral position, toward the left in Fig. 1, by a spring 17 engaging between the finger as at 18 and the armature as at 19. Thus, the armature finger is capable of one movement—vertical—with the armature, and of another movement—lateral—against the resistance of spring 17.

For effecting the lateral movement of the finger 15 after it has been moved downward under the influence of its selector magnet, I provide a worm 20, the screw-threads of which may be engaged by a pin 21 upon the under side of the finger when the latter is depressed, the several worms 20, 20′, etc., for the respective fingers 15, 15′, etc., being spaced apart by recesses 22, 22′, etc., and all mounted upon a common shaft 23, journaled in uprights 24 and 24′. Thus, if the worm shaft be rotated in the direction of the arrow (Fig. 3), any finger 15 held in depressed position by its selector magnet 8 will gradually be pulled laterally against its spring 17 through engagement of pin 21 in a thread of the rotating worm, finally to bring the moving finger to a laterally-shifted and vertically-depressed position to perform its annunciator-acting function. Thus, the finger may be brought to its final active position of complete depression in register with a recess 22, only through the joint agency of the selector magnet and rotating worm affecting coaction between the pin 21 and a worm for a predetermined length of time. The worm may have, and preferably has, multiple threads, the drawing indicating two threads, though in practice I may use three or four thread-leads on each worm.

Obviously, the worm may be rotated at predetermined speed by any suitable means, that which I have shown involving an actuating magnet 25, mounted upon support 26, and having its armature 27 held in retracted position by spring 28 pressing between the armature and magnet. For transmitting each impulsive movement of the armature 27 to effect a single step of the common worm shaft 23, I have shown a pawl-and-ratchet mechanism comprising upon shaft 29, a feed ratchet 30 and stop ratchet 31, having their teeth pointing in opposite directions, and a gear wheel 32, meshing with pinion 33 on the worm shaft 23. Pivoted to the extremity of armature 27 is a feed-pawl arm 34, having extending from its lower side a pawl point 35, pressed positively into engagement with the ratchet 30 by spring 36, which extends between the feed pawl 34 and a latching pawl 37 pivoted to an upright 38, said latching pawl 37 also being positively held in effective engagement with the ratchet 30 by said spring 36. To limit the rearward throw of the pawl arm 34 and its pawl tooth 35 under the influence of the armature spring 28, pin 39 is provided on the pawl for abutment against arm 40 extending from upright 38. Thus, through the ratchets and pawls above described, each impulse of the actuating magnet 25, attracting its armature 27, pulls pawl arm 34 to the left in Fig. 3, pawl point 35 therefore moving ratchet 30, its shaft 29, gear wheel 32, pinion 33, and worm shaft 23 one step. In order to prevent possibility of movement of the ratchet mechanism through more than one step under the influence of momentum, I provide a stop pawl 41, having such connection with the pawl arm 34, as by inclusion of tail 42 thereof between pins 43 and 44 on said arm 34, that it engages stop ratchet 31 immediately after the completion of a single step and releases said ratchet upon the retraction of said pawl arm 34.

As a convenient means to cause impulses of the actuating magnet 25 at regular timed intervals, I have shown an arrangement comprising a clock, generally indicated at 45, preferably placed visibly upon the cover 5 of the device. The interior mechanisms of the clock are of usual construction, save that I provide in the mechanism a switch for intermittent closure at short intervals. Such clock switch devices are well known, and as typifying any suitable construction, I show, in Fig. 2 a cam mounted on a suitable clock arbor 46 for engagement with contacts 47 and 48 to close the same as the cam passes at regular intervals. Thus, with the said contacts 47, 48 connected in an otherwise closed circuit with the actuating magnet 25, each such closure will effect an energization of said magnet, resulting in a step of the worm shaft. As shown in Fig. 4, such switch connections comprise wire 49, connecting contact 47 with terminal binding post A and wire 50 connecting contact 48 with the remaining terminal binding post B, and including magnet 25, a condenser 51, for elimination of sparking, being preferably bridged across the contacts 47 and 48 and attached in the cover of the device.

To meet varying conditions of use, it is, of course, desirable to provide means for adjusting the time required for the worm to move a depressed armature finger to its final annunciator-actuating position, and to this end, I arrange upon bar 52 a stop pin 53 for each finger, said rod being slidable in supporting posts 54—54 and retained in desired position as by set screw 55. Prefer-

ably, further, I provide a dial 56 over which sweeps a pointer 57, pivoted as at 58 and having connection with the bar, as at 59, such that movement of the bar is accompanied with proportional movement of the pointer over said dial. Thus, by movement of said bar 51 to bring the pointer over the desired numeral on the dial (which is preferably figured in the time required for a depressed finger 15 to be fed by the worm from stop 53 to end recess 22), the device may be set to require any desired continuance of depression of the armature finger before it can complete its annunciator-actuating movements. Continuous depression is necessary, of course, for if the armature 11 rises, disengaging pin 21 from worm 20, spring 17 snaps finger 15 laterally back to stop 53.

Obviously, the annunciation to be effected by the armature finger 21, as a result of movement through its two directions to final effective position, may be attained in a variety of ways, that which I have herein shown comprising contacts to be closed through the action of the finger to establish a circuit for an annunciating lamp. Specifically, for each selector magnet 8 I provide companion contacts 60 and 61, supported in such position upon posts 62 and insulating block 63 that when the pin 21 upon the under side of the armature finger 15 reaches the edge of the worm and falls off into the adjacent recess 22, a contact 64, carried by said armature finger shall be brought into electrical connection with the companion contacts 60 and 61. The annunciators, herein shown as lamps 65, are supported upon insulating strip 66 so that they may be seen through suitably glazed apertures 67 in the cover 5 of the inclosing casing.

With the mechanical parts and contacts described, the circuit arrangements which I have shown are such that upon electrical connection between contacts 60, 61, and 64 appurtenant to any selector magnet 8, the annunciating lamps appropriate to that magnet shall be energized and further that such energization, once started, shall continue independently of the original actuating condition in the main circuit. Thus, referring to Fig. 4, each selector magnet is connected in its main supervised circuit by common wire 68 leading to battery terminal binding post B and by wire 69, or 69′, etc., individual to the magnet, through binding post C, or C′, etc., to a circuit closer at a signal initiating point, the return 70 whereof, common to all of the main circuits, is connected to battery binding post A. In each main circuit are herein shown switches such as I have described in my aforesaid co-pending application for hospital systems, such switches including a normally open patient's call switch 71, a normally closed nurse's release switch 72, arranged in a connection 73 including normally open switch 74, controlled by nurse's relay 75 in the main circuit 69. Thus, with the battery 76 connected across binding posts A and B, when the patient's switch is closed, the appropriate selector magnet 8 will be included in the main circuit 76, B, 68, 8, 69 (75), 71, 70, A, 76. Relay 75 calls the nurse in any suitable manner and closes switch 74, so throwing connection 74, 73, 72, in parallel with call switch 71 and maintaining the main circuit closed until release switch 72 (usually located at the same point as switch 71) is opened. Thus, during the interval between the initiating of a call and the visit of the attendant in response thereto, the main circuit, including selector magnet 8, continues energized.

Each annunciator lamp 65 is arranged in a circuit, normally open at contacts 60 and 61, to parallel its selector magnet whenever the contacts 60—61 are closed by the armature contact 64. Thus, common wire 68 to one side of all of the magnets 8, 8′, etc., has connected thereto wire 77 common to one terminal of all of the lamps, and each lamp has its other terminal connected by wire 78 to contact 60, contact 61 being connected by wire 79 to the main circuit wire 69 for the appropriate selector magnet, as at binding post C.

A local holding circuit is provided for each magnet 8, 8′, etc., independent of the main circuit, and closable only when switch points 60—61 are closed at the end of the dual movement of armature finger 15, such circuit, once established, being subject to control only by a normally supervisory release switch 80. Thus, switch 80 is connected by wire 81 to battery binding post A (through wire 49) and by wire 82 to the base plate 7 to which the armature contacts 64 of all of the selector magnets are grounded. Thus, as shown in Fig. 4, when armature contact 64 meets contacts 60—61, a holding circuit for the appropriate selector magnet, say 8′, is established as follows: 76, A, 81, release switch 80, 82, base 7, armature contact 64′, contacts 60′ and 61′, 79′, C′, 8′, 68′, B, 76, such circuit being independent of and in parallel to the main circuit connections 69′—70 and the switches therein. The release switch 80 is preferably located on the casing so that it is operable only by the person having supervisory authority.

The use and operation of the device as above described is as follows: Assuming that a patient has pressed the contacts of the switch 71′ into electrical connection and that the nurse's relay 75′, energized as above described, has closed its armature switch 74′ to maintain the circuit closed through release switch 72′, the selector magnet 8′ appropriate to the energized main circuit will attract its armature so that the pin 21′ upon the under side thereof will be drawn and

held in engagement with the underlying thread of the worm 20′. If the nurse is slow in answering the call, and the release switch is not opened within a definite time, the main circuit continues closed, and pin 21′, following the thread of the rotating worm for the time determined by the number of threads to be traversed and the rotary speed of the worm, reaches the recess 22′ at the end of the worm and is drawn down into the adjacent recess 22′ to bring its movable contact 64′ into connection with the companion stationary contacts 60′ and 61′ and establish the local parallel lamp and selector magnet circuits described (76, A, 81, 80, 82, base plate 7 connected with armature contact 64′, and thence by branches 60′, 78′, 65′, 77, B and 61′, 79′, C′, 69′, 8′, 68′, B, back to battery). Therefore, the lamp appropriate to the energized main circuit is lighted. If the nurse has in the meantime answered the call and the main circuit is therefore open, the superintendent may return the parts to normal by breaking the local circuits at switch 80, when magnet 8′, having no available circuit, will allow its armature to spring up to uppermost position, from which position the armature finger 15′ is pulled by spring 17′ laterally against stop pin 53′. If, however, when the superintendent breaks the local parallel circuits at switch 80, the main circuit still remains closed, both the lamp and the selector magnet remain in energized circuits from binding post A, main circuit, binding post C′, and thence in parallel circuits by wire 79′ and contacts 60′—61′ through the lamp and by wire 69′ through the selector magnet 8′ to the binding post B, so that it will be seen that so long as the main circuit remains closed, the lamp will always remain lighted. If the main circuit is opened at switch 72′ before the finger 15′ of the selector magnet has reached its effective position, the selector magnet has no available circuit. Its armature is therefore retracted, pin 21′ pulled out of engagement with the worm and the finger 15′ allowed to snap over against the stop pin 53′ to original position.

Thus, my device operates effectively to annunciate predetermined continuance of changed condition in the main circuits, while the provision of the armature finger or other part associated with the line-responsive device adapted for movement in one direction in response to the change in circuit condition, and in another direction in response to a timed means, finally to reach effective annunciator-actuating position, is susceptible of embodiment in simple and durable structure and easily and effectively takes care of many supervised circuits with duplication only of the line responsive device and its appurtenant parts.

It will be understood, also, that different forms of timed means for moving the worm, and different means for maintaining the annunciator device in energization, and that other changes in particular devices, may be used to embodying the invention, without departure from the spirit thereof and within the scope of the appended claims.

What I claim is:

1. In a signal device the combination of electro-responsive means responsive to changes in a circuit, timed means comprising a member movable at a predetermined speed, an annunciator-controlling part movable in one direction by said responsive means and in another direction by said timed means, and annunciator means controlled by said parts and operable in response to such dual movement of said parts.

2. In a signal device, the combination of an electro-responsive means responsive to changes in a circuit, timed means comprising a member movable at predetermined speed, an annunciator, and an annunciator-controlling part movable in one direction by said responsive means into engagement with said timed member, and in another direction through such engagement finally to reach a position to condition the annunciator for operation.

3. In a signal device, the combination of electro-responsive means responsive to changes in a circuit, timed means comprising a worm rotating at predetermined speed, an annunciator, a part movable in one direction by the responsive means into engagement with said worm and movable in another direction through engagement with said worm finally to reach effective position, and means controllable by said movable part in its effective position to condition the annunciator for operation.

4. In a signal device, the combination of a main circuit, means responsive to changes in said circuit, timed means movable at predetermined speed, an annunciator, an annunciator-conditioning part movable in one direction by the responsive means into engagement with said timed means, and in another direction through such engagement finally to reach effective position, and means to maintain the annunciator-conditioning part in such effective position independently of the condition in the main circuit.

5. In a signal device, the combination of a main circuit, means therein to change the condition of said circuit, means responsive to changes in said circuit, timed means comprising a member movable at predetermined speed, an annunciator, an annunciator-controlling part movable in one direction by the responsive means into engagement with said timed means and movable in another direction through such engagement with the movable timed means finally to reach effective position, retaining means to maintain the

annunciator-controlling part in such effective position, independently of the condition of said main circuit, and means to release said retaining means.

6. In a signal device, the combination of means responsive to changes in a circuit, timed means comprising a worm rotating at predetermined speed, an annunciator, an annunciator-controlling part movable in one direction by the responsive means into engagement with said worm and in another direction through such engagement finally to reach effective position, and means to return said controlling part to normal position upon cessation of changed condition in said circuit.

7. In a signal device, the combination of a magnet responsive to changes in a circuit, timed means comprising a worm rotating at predetermined speed, an annunciator, an annunciator-controlling part movable in one direction by the magnet when energized into engagement with the worm and movable into another direction through such engagement finally to reach effective position, means to return said actuating part to normal position upon deënergization of the magnet, and retaining means conditioned by said annunciator controlling part in its final effective position to maintain said part in such position independently of the condition of the circuit.

8. In a signal device, a selector magnet responsive to changes in a circuit, a worm rotating at predetermined speed, an annunciator, a part movable in one direction into engagement with the worm by energization of said selector magnet, and in another direction through such engagement finally to reach effective position, contacts operable by said part in its effective position to establish local selector magnet and annunciator circuits independent of the main circuit, and a switch to break said local circuits.

9. In a signal device, a main circuit, a local circuit, a selector magnet responsive to changes in the main circuit, a worm rotating at predeterminad speed, a part movable in one direction into engagement with said worm upon energization of said selector magnet and in another direction through such engagement finally to reach effective position, contacts operable by said part in its effective position, to establish magnet and annunciator branches through the local circuit and through the main circuit, and means for breaking the local circuit whereby such breakage of the local circuit may return the parts to normal only if the main circuit has returned to normal.

10. In a signal device, means responsive to changes in a circuit, timed means comprising a worm movable at timed speed, an annunciator, and annunciator-actuating means comprising a part movable in one direction into engagement with said worm by said responsive means, and in another direction through such engagement finally to reach effective position, and means for varying the normal position of said movable part with respect to said worm, to vary the number of threads to be traversed before said part may reach said final effective position.

In testimony whereof I hereunto set my hand in the presence of two witnesses.

MAURICE LEVISON.

In the presence of—
MARY F. ALLEN,
W. LINN ALLEN.

Copies of this patent may be obtained for five cents each, by addressing the "Commissioner of Patents, Washington, D. C."