Dec. 1, 1970 B. SANDOR 3,544,148

LATCH OPERATING DOOR HANDLE

Filed Nov. 21, 1968

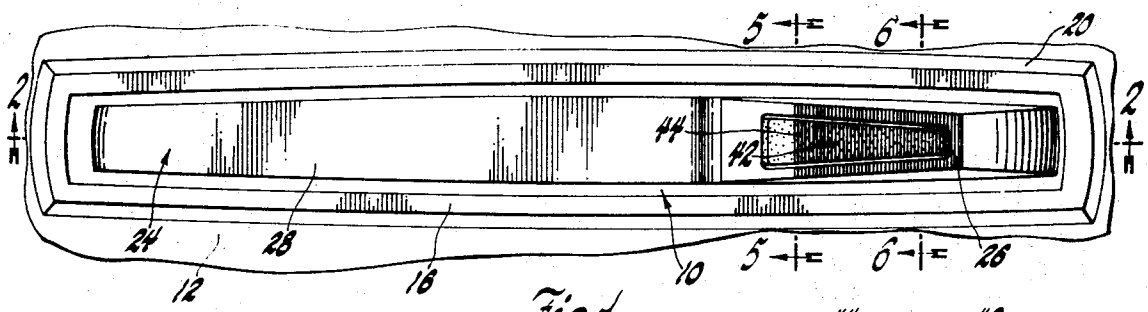

Fig. 1

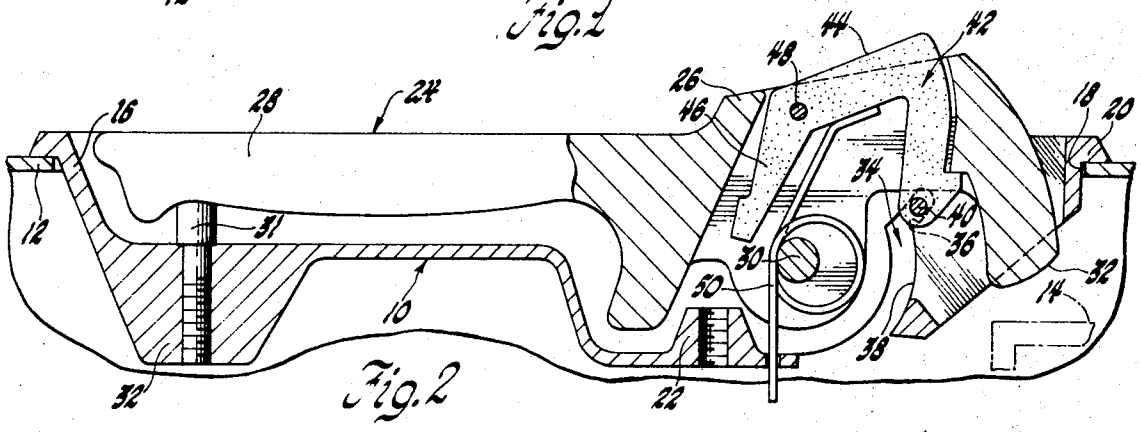

Fig. 2

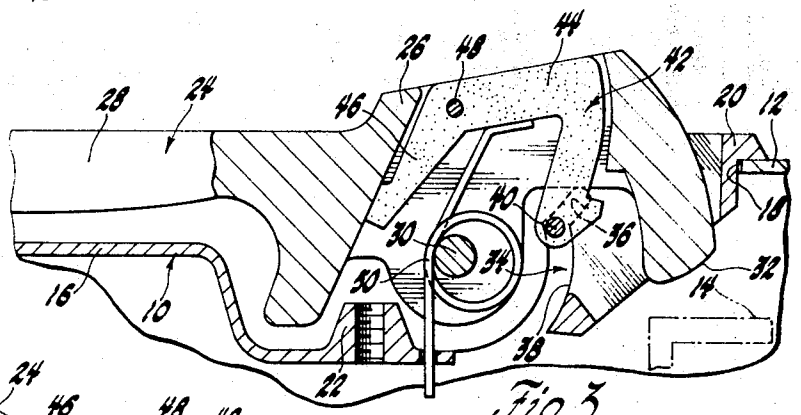

Fig. 3

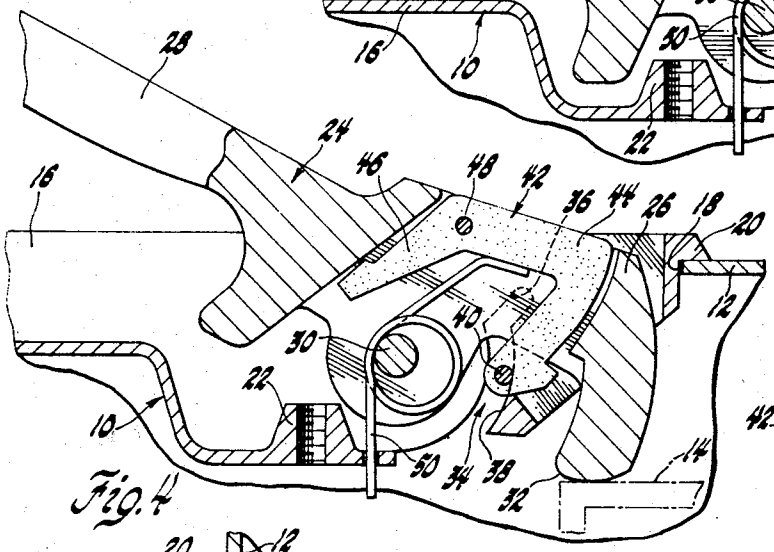

Fig. 4

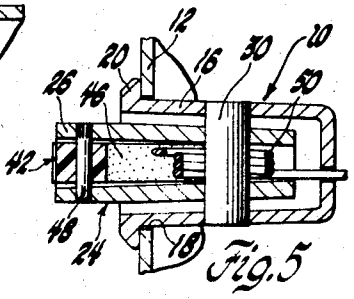

Fig. 5

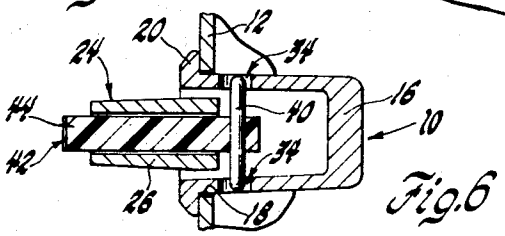

Fig. 6

INVENTOR.
Bela Sandor

BY

D. L. Ellis

ATTORNEY

United States Patent Office

3,544,148

Patented Dec. 1, 1970

1

3,544,148

LATCH OPERATING DOOR HANDLE

Bela Sandor, Detroit, Mich., assignor to General Motors Corporation, Detroit, Mich., a corporation of Delaware

Filed Nov. 21, 1968, Ser. No. 777,683
Int. Cl. E05b 5/02
U.S. Cl. 292—336.3 5 Claims

ABSTRACT OF THE DISCLOSURE

A latch operating outside door handle for vehicle body doors includes an elongated handle member of the type including integral thumb and finger gripping portions pivotally mounted on a door escutcheon by a pivot stud adjacent the thumb portion of the handle member for rotation between an inoperative or a normal position generally flush with the door and an extended position operative for outside actuation of the door latch. A handle latching member is pivotally carried within the thumb portion of the handle member and carries a latching pin cooperating with slots in the handle escutcheon to normally positively latch the handle member in its inoperative position but responsive to thumb pressure to release the pin and permit movement of the handle member between its inoperative and operative positions.

This invention relates to vehicle body door handles and more particularly to an improved latch operating handle for vehicle body doors including means for normally preventing actuating rotation thereof.

One feature of this invention is that it provides an improved latch operating handle for vehicle body doors and of the type including a thumb portion and an elongated finger gripping portion rotatable between inoperative and latch actuating positions, with handle latching means being provided for normally holding the handle in its inoperative position against actuating rotation therefrom except the application of manual pressure to the handle member releasing the latch means.

Another feature of this invention is in the provision of such a handle particularly including integral thumb and finger gripping portions the latter of which lies substantially flush with the door in the inoperative position, with the handle latching means being connected with an actuating member mounted in the thumb portion of the handle member and responsive to thumb pressure thereon for release of the latch means and a subsequent actuating rotation of the handle member. Certain other features of the invention reside in the use of a latching pin and slot means forming the handle latching means and in the use of a pivoted handle release or actuating member pivotally mounted directly within the thumb portion of the latch handle.

These and other features and advantages of the invention will be readily apparent from the following description and from the drawings wherein:

FIG. 1 is a fragmentary side elevational view of a portion of a vehicle body door including therein a latch operating handle according to this invention;

FIG. 2 is a sectional view taken generally along the plane indicated by the lines 2—2 of FIG. 1 and showing the handle member in flush inoperative position and the handle latching means in latched position;

FIG. 3 is a view similar to FIG. 2 showing the handle latching means in unlatched position;

FIG. 4 is a view similar to FIG. 3 showing the handle member in the latch actuating position thereof;

FIG. 5 is a sectional view taken generally along the plane indicated by the lines 5—5 of FIG. 1; and

2

FIG. 6 is a sectional view taken generally along the plane indicated by the lines 6—6 of FIG. 1.

Referring now particularly to FIG. 1 of the drawings, a latch operating handle assembly according to the invention designated generally as **10** is shown mounted on a vehicle body door outer panel indicated at **12**. As is well understood in the art, the location of the handle assembly **10** is functional with respect to the location of the door latch and lock mechanism for the vehicle body door customarily located adjacent the free-swinging edge thereof. Particularly, the handle assembly **10** is adapted for cooperation with a movable actuating portion of the door latch mechanism usually referred to as the push button lever or latch release lever. Such lever is indicated in the drawings at **14** and shown in a normal or unactuated position in FIGS. 2 and 3.

Referring further to such figures, the handle assembly **10** generally includes a decorative escutcheon **16** of die-cast or similarly fabricated hollow construction received in a complementarily shaped opening **18** in the door outer panel **12**, the escutcheon having a decorative flange or lip **20** overlying the marginal or edge portion of the panel defining the opening. The escutcheon may be provided with suitable attaching boss structure as at **22** for fastening of the escutcheon to a reinforcing or door inner panel, not shown, as by screws or the like. Received within the escutcheon **16** is an operating handle member **24** which may be characterized as generally of the flush type and including in the preferred embodiment integrally formed thumb and finger gripping portions **26** and **28** respectively. The handle member is pivotally mounted on the escutcheon **16** by a pivot stud **30** press-fitted or otherwise secured into aligned openings in the upper and lower walls of the escutcheon and rotatably received in similarly aligned bores in the upper and lower walls formed in the thumb portion **26** of the handle member, FIG. 5. These upper and lower walls define a generally hollow configuration to the major part of the thumb portion **26**. The pivot stud **30** mounts the handle member for rotation relative to the escutcheon from an inoperative position shown in FIG. 2, wherein the gripping portion **28** lies within the escutcheon substantially flush with the outer panel **12** and engaged with a stop button **31**, to an operative or latch actuating position shown generally in FIG. 4. In moving from the inoperative to the latch actuating position, a latch actuating cam or nose **32** formed at the free end of the thumb portion **26** is adapted for operative engagement with the latch release lever **14** upon initial such movement and to thereafter carry the lever **14** to its latch actuating position indicated generally in FIG. 4.

Means for latching the handle member **24** to the escutcheon **16** includes a cooperating latch pin and latch slot structure in the handle member and the escutcheon normally engaged in the inoperative position of the handle shown in FIG. 2, to positively hold the same therein. Particularly, escutcheon **16** includes in the upper and lower wall portions thereof in the vicinity of the handle member thumb portion **26** a pair of latching slots **34** each including a first or latching portion **36** extending generally radially of pivot stud **30** and divergently related from a further or freewheeling portion **38** formed generally circularly about the center of the pivot stud. Cooperating with such slots **34**, also seen in FIG. 6, is a latch pin **40** extending between the walls of the escutcheon to have its opposite ends received in the slots and carried intermediate its ends in a bore of a latch pin actuating member **42**. Such member **42** is of generally hook-like shape including a thumb portion **44** normally extending for exterior projection from the handle member thumb portion **26** and further including a stop leg **46**. The actuating member **42** is pivotally secured within the recess of the handle mem-

ber thumb portion by a pin **48** between the upper and lower walls of the latter. A coil torsion spring **50** is wrapped about the pivot stud **30** and bears at its ends on the escutcheon **16** and on the thumb portion **44** of the actuating member to serve to bias the actuating member in a counterclockwise direction relative to the handle member **24** and to in turn bias the handle member counterclockwise about its pivot stud **30** to the inoperative position within the escutcheon shown in FIG. 2.

Assuming now that the handle assembly is in the condition of the parts shown in FIG. 2 and that it is desired to employ the handle assembly for door latch releases through actuation of the release lever **14**, thumb pressure is applied to the thumb portion **44** of the actuating member **42**. Such thumb pressure causes rotation of the actuating member about pin **48** against the action of torsion spring **50** to move the latch pin **40** in a clockwise direction out of the latching portion **26** of slots **34**, as shown, to the position of FIG. 3. With the latch pin so located, the actuating member **42** and the handle member **24** are freed for clockwise rotation as a unit relative to the escutcheon about the pivot stud **30**. Thus, continued thumb pressure engaging the stop leg **46** with the wall of the handle member will rotate these parts as a unit about the pivot stud oscillating the latch pin **40** through the freewheeling portions **38** of the slots **34**. The initial movement of the handle member **24** from the inoperative to the latch actuating position under the thumb pressure will expose enough of the gripping portion **28** to facilitate grasping thereof by the fingers such that the latter portion may then be used to complete the rotation of the handle member to the latch actuating position of FIG. 4 wherein release lever **14** has been engaged and moved by nose **32** to the latch releasing position thereof. Such rotation of the handle member of course proceeds against the reaction of the torsion spring **50**.

Once latch actuation operation of the handle member **24** is accomplished, release of the hand allows torsion spring **50** to return the parts counterclockwise back to the inoperative position of FIG. 3, the pressure of the torsion spring of course first being applied to the actuating member **42** seeking counterclockwise rotation of the latter relative to the handle member thumb portion **26**. However, the concentric nature of the freewheeling slot portions **38** in cooperation with the latch pin **40** prevents such relative rotation, and also any interfering engagement of the latch pin on any corners of the escutcheon, so that the force of the spring as applied directly for return rotation of the handle member and the actuating member as a unit to the position of FIG. 3. Once reaching this position, latch pin **40** is freed from the restraint of the freewheeling portions of slots **34** so that the spring pressure now rotates the actuating member **42** counterclockwise about pin **48** relative to the thumb portion **26** and back to the normal or latching position thereof shown in FIG. 2. In this position, the latch pin **40** is again located in the latching portions **36** of slots **34** so as to be operative to positively prevent rotation of the handle member **24** from its inoperative position except upon a repeated deliberate application of thumb pressure to actuating member **42** removing the latch pin from slot portions **36**.

Having thus described the invention, what is claimed is:

1. In a vehicle body including a door swingable between open and closed positions, operating door handle means comprising, an elongated handle member, means mounting said handle member adjacent one end thereof on said door for movement between an inoperative position adjacent the door and an extended operative position adapted for actuation of a door latch, latching means on said handle member and on said door movable between latched and unlatched positions in the inoperative position of said handle member, said latching means including pin means and cooperating slot means, said slot means including a first portion receiving said pin means throughout movement of said latching means between latched and unlatched positions in the inoperative position of said handle member and cooperable with said pin means in holding said handle member therein, and said slot means including a further portion receiving said pin means in the unlatched position of said latching means and permitting unobstructed freewheeling relative movement thereof and movement of said handle member between the inoperative and the operative positions thereof, and means on said handle member responsive to manual pressure applied thereto in the inoperative position of said handle member to selectively move said latching means from the latched to the unlatched position thereof permiting movement of said handle member from the inoperative to the operative position thereof.

2. In a vehicle body including a dor swingable between open and closed positions, operating door handle means comprising, an elongated handle member including integral thumb and finger gripping portions, pivot means for mounting said handle member adjacent the thumb portion thereof on said door for movement of the handle member relative thereto between an inoperative position wherein the finger gripping portion lies substantially flush with the door and an operative position adapted for actuation of a door latch and wherein the finger gripping portion extends substantially from the door, latching means on said handle member and on said door movable between latched and unlatched positions in the inopeartive position of said handle member, said latching means including pin means and cooperating slot means, said slot means including a first portion receiving said pin means throughout movement of said latching means between latched and unlatched positions in the inoperative position of said handle member and cooperable with said pin means in holding said handle member therein, and said slot means including a further portion receiving said pin means in the unlatched position of said latching means and permitting unobstructed freewheeling relative movement thereof and movement of said hnadle member between the inoperative and the operative positions thereof, and an actuating member mounted on the thumb portion of said handle member and manually operable to release said latching means for movement of said handle member from the inoperative to the operative position thereof.

3. In a vehicle body including a door swingable between open and closed positions, flush type operating door handle means comprising, an elongated handle member including integral thumb and finger gripping portions, an escutcheon on said door, pivot means mounting said handle member adjacent the thumb portion thereof on said escutcheon for movement about the axis of said pivot means between an inoperative position wherein said gripping portion lies substantially flush with said door and an operative position adpated for actuation of a door latch and wherein said gripping portion is swung outwardly substantially from said door, latching means on said handle member and on said escutcheon normally engageable in the inoperative position of said handle member to positively hold the same therein, said latching means including an actuating member pivotally mounted on the thumb portion of said handle member and carrying interiorly thereof a latching pin pivotable with said actuating member between latched and unlatched positions, said latching means further including slot means in said escutcheon receiving said latching pin and including a first portion directed generally radially of said pivot means axis receiving said latching pin in the range of movement thereof between latched and unlatched positions when said handle member is in the inoperative position thereof and cooperable with said latching pin to hold said handle member therein, said slot means

including a further portion merging with said first portion and arcuate about said pivot means axis for receiving said latching pin in the unlatched position thereof and permitting unobstructed freewheeling movement thereof and of said handle member as a unit between the inoperative and the opertive positions of said handle member, and means biasing said actuating member and said latching pin to said latching position thereof and in turn through said actuating member biasing said handle member from the opertive to the inoperative position thereof, said actuating member including a portion exposed exteriorly of said handle member thumb portion for manipulation by thumb pressure to pivot and move said latching pin from the latched to the unlatched position thereof against the action of said biasing means.

4. In a vehicle body including a door swingable between open and closed positions, operating door handle means comprising, an escutcheon mounted on said door, an elongated handle member including thumb and finger gripping portions, means on said handle member adjacent one end thereof corresponding to said thumb portion thereof swingably mounting said handle member on said escutcheon, said handle member being swingable relative to said escutcheon between an inoperative portion adjacent said door and an extended operative position adapted for actuation of a door latch, latching means operative to hold said handle member normally in said inoperative position thereof and including a latch element mounted in said thumb position of said handle member for movement between a latched position engaged with a further latch element on said escutcheon when said handle member is in the inoperative position thereof and an unlatched position out of engagement with said further latch element, means biasing the first mentioned latch element to the latched position thereof such that said handle member is normally latched when in the inoperative position thereof, and an actuating member mounted on said thumb portion of said handle member and responsive to thumb pressure applied thereto to move said first mentioned latch element from the latched to the unlatched position thereof.

5. In a vehicle body including a door swingable between open and closed positions, operating door handle means comprising an escutcheon mounted on said door,

an elongated handle member including thumb and finger gripping portions, means on said handle member adjacent one end thereof corresponding to said thumb portion thereof swingably mounting said handle member on said escutcheon, said handle member being swingable relative to said escutcheon between an inoperative position adjacent said door and an extended operative position adapted for actuation of a door latch, an actuating member movably mounted on said thumb portion of said handle member, latching means on said actuating member and on said escutcheon movable in the inoperative position of said handle member between a latched position holding said handle member in the inoperative position and an unlatched position releasing said handle member for movement between the inoperative and operative positions, said latching means including a first latch element mounted on said actuating member and movable unitarily therewith between a position engaged with a second latch element on said escutcheon in said latched position of said latching means and a position disengaged from said second latch element in said unlatched position of said latching means, and a torsion spring between said actuating member and said escutcheon biasing said actuating member and said first latch element toward the latched position of said latching means so that said handle member is normaly latched in the inoperative position thereof and through said actuating member acting to bias said handle member toward said inoperative position thereof.

References Cited

UNITED STATES PATENTS

966,349	8/1910	McCullah	292—210
2,208,818	7/1940	Schaffler	292—336.3
2,613,971	10/1952	Goserud	292—207 X
2,710,213	6/1955	Hottel	292—207
3,250,558	5/1966	McClintock	292—229

FOREIGN PATENTS

17,160	4/1913	Denmark	292—209

MARVIN A. CHAMPION, Primary Examiner

E. J. McCARTHY, Assistant Examiner