A. WOLF.

CORNER POST FASTENING.

APPLICATION FILED MAY 27, 1913.

1,214,738.

Patented Feb. 6, 1917.

2 SHEETS—SHEET 1.

Fig 1.

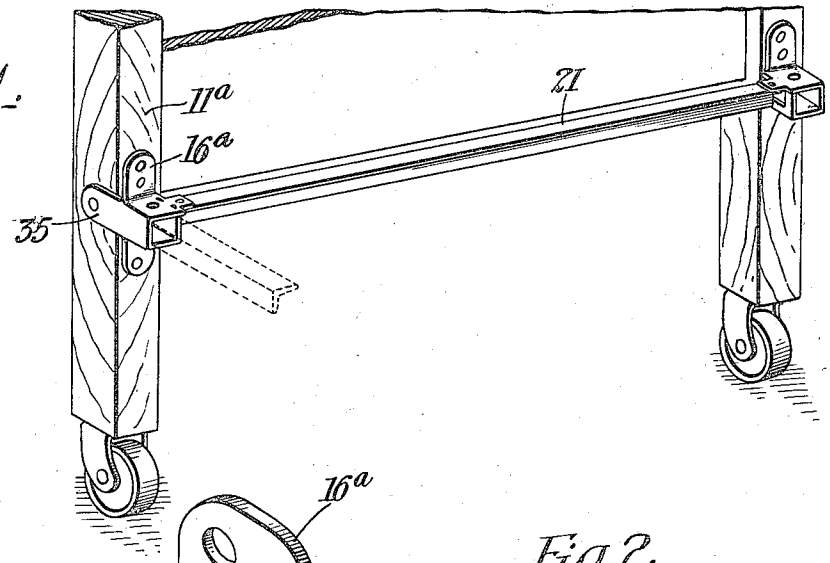

Fig. 2.

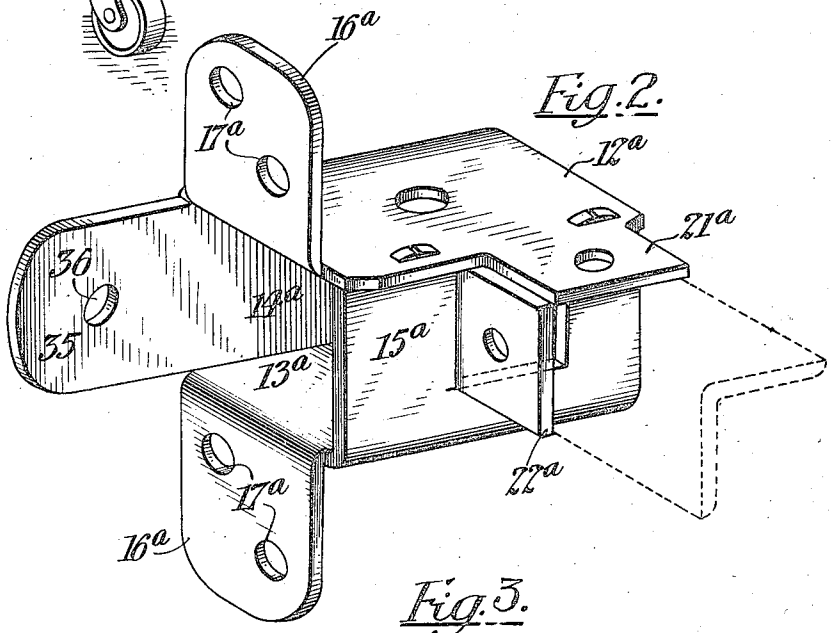

Fig. 3.

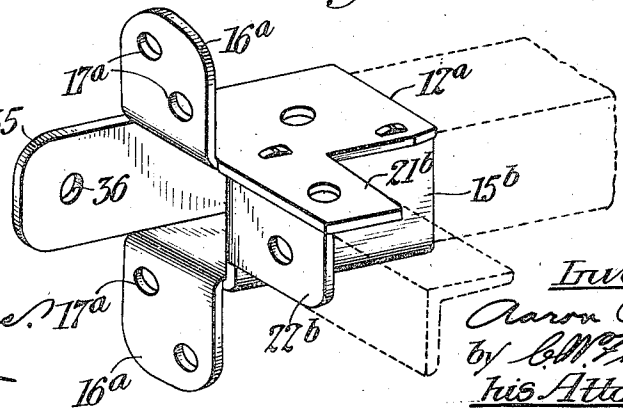

Witnesses:
Titus H. Irons.
E. Coltran

Inventor:
Aaron Wolf
by C. W. Fairbank
his Attorney.

A. WOLF.

CORNER POST FASTENING.

APPLICATION FILED MAY 27, 1913.

1,214,738.

Patented Feb. 6, 1917.

2 SHEETS—SHEET 2.

Fig. 4.

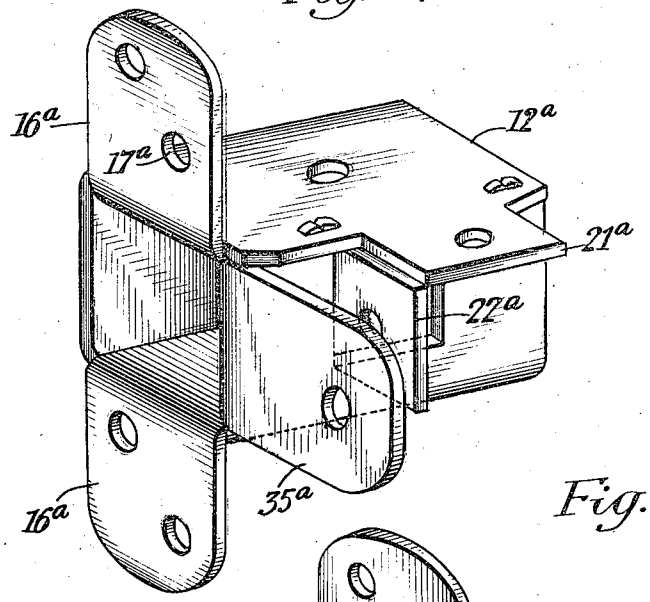

Fig. 5.

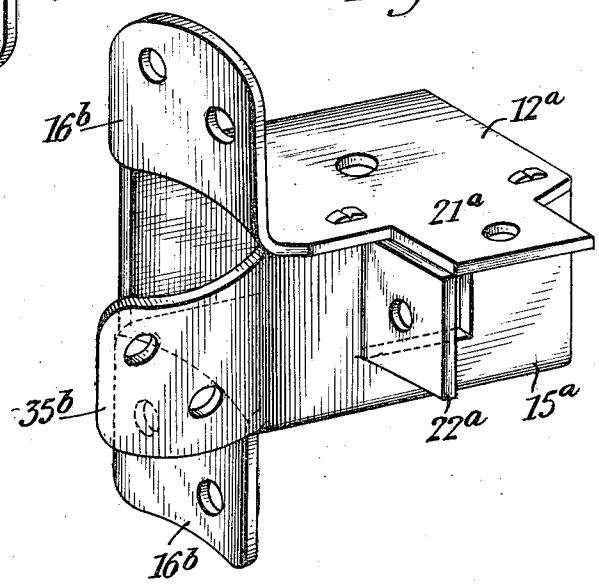

WITNESSES

Titus H. Crone

E. Coltran

INVENTOR

Aaron Wolf

BY

C. M. Fairbanks

ATTORNEY

UNITED STATES PATENT OFFICE.

AARON WOLF, OF NEW YORK, N. Y.

CORNER-POST FASTENING.

1,214,738. Specification of Letters Patent. Patented Feb. 6, 1917.

Application filed May 27, 1913. Serial No. 770,095.

To all whom it may concern:

Be it known that I, AARON WOLF, a citizen of the United States, and resident of New York city, in the county of New York and State of New York, have invented certain new and useful Improvements in Corner-Post Fastenings, of which the following is a specification.

This invention relates to certain improvements in corner post fastenings, for bedsteads, and more particularly to the general type shown in the prior patents No. 1,048,256, issued December 24th, 1912, and No. 1,143,796, issued June 22nd, 1915, to myself and Antoni Governale. The specific constructions illustrated in said patents each involve the use of a tubular member formed from a flat sheet metal blank and adapted to be rigidly secured to the corner post of the bedstead. A side rail preferably in the form of an angle iron is rigidly secured to said tubular member and the latter has a lug portion integral therewith and extending outwardly from one side wall in a vertical plane to facilitate the attachment of a cross-bar or rail connecting the two corner posts at the head or at the foot of the bed.

My present invention involves an improved form of member whereby, from a single blank, there are formed the parts cooperating with the post, side-rail and cross-rail to rigidly connect the three together.

My invention involves other features which together with the details of the features above referred to will be more particularly pointed out hereinafter and defined in the claim.

Reference is had to the accompanying drawings in which similar characters of reference indicate corresponding parts throughout the several views, and in which—

Figure 1 is a perspective view of a portion of a wooden bedstead showing a special form of tubular member adapted to be used therewith, Fig. 2 is a perspective view of the tubular member shown in Fig. 1, and on a somewhat larger scale, and Figs. 3, 4 and 5 are perspective views of tubular members somewhat similar to that shown in Fig. 2, but having a different means for the attachment of the cross rail, and for attachment to the corner post.

In Fig. 2 I have so formed the blank that the meeting edges come at the top inner corner of the tubular member and provide the top wall with an integral extension 21^a in its own plane and provide the side wall 15^a with a flange 22^a struck up therefrom. In this construction it will be noted that the flange 22^a may extend all the way up to and support a flange 21^a. Instead of forming the flange 22^a by cutting and bending up a part of the body of the wall 15^a, I may employ a flange 22^b as shown in Fig. 3, which is formed from an extension on the side wall and bent around to lie in a plane at right angles to the plane of the wall 15^b. This provides a stronger construction for the side wall of the tubular member and permits the top flange 21^b to be brought closer to the body of the head of the bed.

Although the special form of tubular member shown may be used in connection with a hollow tubular bed post it is particularly adapted for use in connection with a wooden bed post.

In Figs. 1 and 2 I have shown the top and bottom walls 12^a and 13^a provided with extensions 16^a bent upwardly and downwardly respectively so as to lie in the same plane and to lie flat against a square wooden corner post 11^a. The extensions are provided with suitable apertures 17^a adapted to receive rivets or bolts by which the tubular member may be rigidly secured to the post irrespective of the material of the latter. As an additional means of effecting the connection of the parts the side wall 14^a is preferably provided with an extension 35 in alinement therewith and provided with an aperture 36 to receive a bolt or screw. This extension is adapted to lie flush with the outer surface of the bedstead corner post as shown in Fig. 1.

In some constructions there is no necessity for a cross rail, or brace 21 and therefore attaching lugs or flanges may be entirely omitted, but in some constructions such cross rail is desired and I may employ the flanges as shown or may modify them as shown in Fig. 3. The construction shown in Fig. 2 may also be provided with a flange 22^b exactly the same as in Fig. 3 and in addition to the flange 22^a. This extra flange 22^b may lie flush with and engage with the head of the bed and receive a bolt or screw to additionally hold the parts together.

As indicated the flange 35 is formed on the side wall of the tubular member opposite to the side wall which bears the lugs for the cross rail. Thus the flange 35 is designed to be secured to the outer face of the corner post. In some constructions and in fact in most constructions, where a wooden corner post is employed, it is preferable to have the flange 35 on the same side of the tubular member as the connections for the cross-rail so that said flange will lie against the inner surface rather than the outer surface of the post.

In Fig. 4 I have illustrated a construction similar to that shown in Fig. 2 except that a flange 35^a is employed in place of the flange 35. This flange 35^a is illustrated as lying in substantially the same plane as the flanges 16^a and is designed for use with bedsteads in which a very large corner post is employed, or in which the head of the bed presents a continuous plane inner surface. Of course this flange may be offset if there be any irregularity in said surface. The construction shown may be readily adapted to facilitate the attachment to a tubular post by making the said flanges somewhat concave. In Fig. 5 I have shown flanges of this character which may be secured either to a metal or to a wooden post where the latter presents a cylindrical external surface. In this construction I have shown a flange 35^b as an extension on the wall 15^a and also curved so as to fit the convex surface of a post.

It is of course evident that I may employ in connection with the several tubular members above described the side rail connection of either of the prior patents above referred to or other connections might be employed.

Preferably I employ the specific construction originally illustrated in this application but divided out and made the subject matter of my Patent No. 1,120,638, issued December 8, 1914.

Various changes and rearrangements of the parts may be made without departing from the spirit of my invention and within the scope of the appended claim.

Having thus described my invention, what I claim as new and desire to protect by Letters-Patent is:

A corner post fastening including a tubular member formed from a sheet metal blank having its opposite edges secured together, said member having the top and bottom walls thereof provided with extensions bent upwardly and downwardly respectively, to lie in substantially the same vertical plane and adapted for direct engagement with the side of a corner post to hold said tubular member in a substantially horizontal position, the top wall extending laterally beyond one side wall to form an attaching lug for a cross-rail and the end of said tubular member opposite to said corner post being open to receive therein the end of a side-rail.

Signed at New York city, in the county of New York and State of New York, this 26th day of May, A. D. 1913.

AARON WOLF.

Witnesses:

C. W. FAIRBANK,
FLORENCE LEVIEN.