(12) INTERNATIONAL APPLICATION PUBLISHED UNDER THE PATENT COOPERATION TREATY (PCT)

(19) World Intellectual Property Organization
International Bureau

(43) International Publication Date
4 December 2014 (04.12.2014)

WIPO | PCT

(10) International Publication Number
WO 2014/194182 A1

(51) International Patent Classification:
A61B 3/103 (2006.01)

(21) International Application Number:
PCT/US2014/040203

(22) International Filing Date:
30 May 2014 (30.05.2014)

(25) Filing Language: English

(26) Publication Language: English

(30) Priority Data:
61/829,548 31 May 2013 (31.05.2013) US
61/896,011 25 October 2013 (25.10.2013) US

(71) Applicant: **THE BOARD OF TRUSTEES OF THE LELAND STANFORD JUNIOR UNIVERSITY** [US/US]; 1705 El Camino Real, Palo Alto, CA 94306-1106 (US).

(72) Inventors: **MYUNG, David**; 6775 Michele Way, San Jose, CA 95129 (US). **CHANG, Robert, Tienhan**; 2452 Watson Court, Palo Alto, CA 94303 (US). **HE, Lingmin**; 850 Altaire Walk, Palo Alto, CA 94303 (US). **NUGENT, Alex**; 127 Kellogg Way, Santa Clara, CA 95051 (US). **VAN, Huynh, P.**; 405 Lyoncross Way, San Jose, CA 95123 (US). **WONG, Ira, G.**; 930 Viewridge Drive, San Mateo, CA 94403 (US). **JAIS, Alexandre**; 208 Rosse Lane, #205, Stanford, CA 94306 (US). **BLUMENKRANZ, Mark**; 20 Larguita Lane, Portola Valley, CA 94028 (US).

(74) Agents: **JACOBS, Ron** et al.; 550 S California Avenue, Suite 300, Palo Alto, CA 74306 (US).

(81) Designated States *(unless otherwise indicated, for every kind of national protection available)*: AE, AG, AL, AM, AO, AT, AU, AZ, BA, BB, BG, BH, BN, BR, BW, BY, BZ, CA, CH, CL, CN, CO, CR, CU, CZ, DE, DK, DM, DO, DZ, EC, EE, EG, ES, FI, GB, GD, GE, GH, GM, GT, HN, HR, HU, ID, IL, IN, IR, IS, JP, KE, KG, KN, KP, KR, KZ, LA, LC, LK, LR, LS, LT, LU, LY, MA, MD, ME, MG, MK, MN, MW, MX, MY, MZ, NA, NG, NI, NO, NZ, OM, PA, PE, PG, PH, PL, PT, QA, RO, RS, RU, RW, SA, SC, SD, SE, SG, SK, SL, SM, ST, SV, SY, TH, TJ, TM, TN, TR, TT, TZ, UA, UG, US, UZ, VC, VN, ZA, ZM, ZW.

(84) Designated States *(unless otherwise indicated, for every kind of regional protection available)*: ARIPO (BW, GH, GM, KE, LR, LS, MW, MZ, NA, RW, SD, SL, SZ, TZ, UG, ZM, ZW), Eurasian (AM, AZ, BY, KG, KZ, RU, TJ, TM), European (AL, AT, BE, BG, CH, CY, CZ, DE, DK, EE, ES, FI, FR, GB, GR, HR, HU, IE, IS, IT, LT, LU, LV, MC, MK, MT, NL, NO, PL, PT, RO, RS, SE, SI, SK, SM, TR), OAPI (BF, BJ, CF, CG, CI, CM, GA, GN, GQ, GW, KM, ML, MR, NE, SN, TD, TG).

Published:

— *with international search report (Art. 21(3))*

[Continued on next page]

(54) Title: MODULAR LENS ADAPTERS FOR MOBILE ANTERIOR AND POSTERIOR SEGMENT OPHTHALMOSCOPY

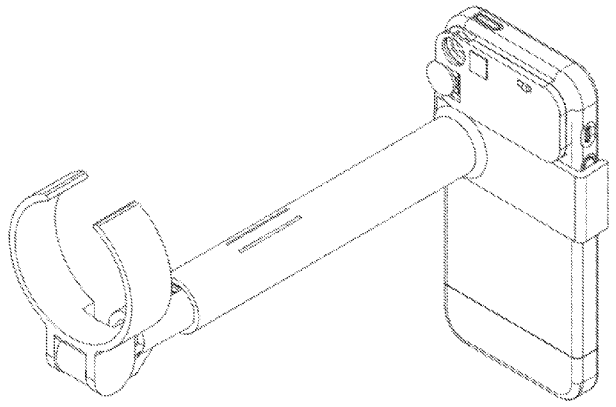

FIG. 8

(57) Abstract: A modular lens adapter system or kit is provided for mobile anterior and posterior segment ophthalmoscopy. Equipped with various lens adapter modules, respective lenses and a mobile imaging device, a user is provided with tools for various mobile ophthalmoscopy imaging applications. Eye care practitioners can use their existing lenses to customize the modular lens adapter system in a cost-effective way, which allows for mobile and remote capture, viewing, and utilization of clinical images. The various modules are also adaptable to nearly any type of phone or tablet regardless of its dimensions or presence of a protective case. The invention also addresses the need for fewer, smaller, less expensive, and easier to use ophthalmic imaging equipment, which is further important in enabling a broad base of users.

WO 2014/194182 A1

— *before the expiration of the time limit for amending the claims and to be republished in the event of receipt of amendments (Rule 48.2(h))*

MODULAR LENS ADAPTERS FOR MOBILE ANTERIOR AND POSTERIOR SEGMENT OPHTHALMOSCOPY

FIELD OF THE INVENTION

This invention relates generally to ophthalmoscopy. In particular, the invention relates to lens adapters for mobile ophthalmoscopy that can be used in a modular fashion with mobile imaging devices, like smartphones.

BACKGROUND OF THE INVENTION

Over the past decade, ophthalmic imaging has moved rapidly from film to digital. However, most of today's gold standard digital fundus cameras, for example, are large, expensive tabletop medical devices only available in eye clinics. With the advent of the smartphone and ever improving built-in cameras rivaling point-and-shoot pocket digital cameras, eye care providers have the opportunity to capture high quality images anywhere using their existing lenses without the need for expensive equipment. Combined with ubiquitous fast wireless internet, cloud storage, smartphone-enabled electronic medical records, and encrypted messaging, a modern smartphone can now be instantly transformed into a low cost, portable, ophthalmic imaging camera. The present invention advances the art by providing a customizable adapter system or kit for mobile anterior and posterior segment ophthalmoscopy.

SUMMARY OF THE INVENTION

A modular lens adapter system or kit is provided for mobile anterior and posterior segment ophthalmoscopy. Equipped with various lens adapter modules, respective lenses and a mobile imaging device, a user is provided with tools for mobile ophthalmoscopy. The user can setup for various mobile ophthalmoscopy imaging applications like:

- Posterior segment ophthalmoscopy using the ophthalmoscopy lens adapter with the mobile imaging device and its internal (variable intensity) light source.
- Posterior segment ophthalmoscopy using the ophthalmoscopy lens adapter with the mobile imaging device and an external (variable intensity) light source.
- Posterior segment ophthalmoscopy using the ophthalmoscopy lens adapter with the mobile imaging device using the (variable intensity) light source of the macro lens adapter (without the macro lens mounted).
- Anterior segment ophthalmoscopy using the macro lens adapter and mounted a macro lens with the mobile imaging device optionally using the (variable intensity) light source of the macro lens adapter, where the ophthalmoscopy lens adapter is detached from the mobile imaging device.
- Anterior segment ophthalmoscopy using the macro lens adapter and mounted a macro lens with the mobile imaging device and its internal (variable intensity) light source, where the ophthalmoscopy lens adapter

is detached from the mobile imaging device.

- Iridocorneal angle ophthalmoscopy (gonioscopy) using a modified macro lens adapter that allows mounting of a gonioscopy lens with the mobile imaging device optionally using the (variable intensity) light source of the macro lens adapter or the mobile device's internal flash.

With the embodiments of this invention, eye care practitioners can use their existing lenses to customize the modular lens adapter system in a cost-effective way, which allows for mobile and remote capture, viewing, and utilization of clinical images. The various modules are also adaptable to nearly any type of phone, tablet, or other mobile imaging device regardless of its dimensions or presence of a protective case. The embodiments also address the reduced need for extra ophthalmic equipment, which is further important in enabling a broad base of users.

BRIEF DESCRIPTION OF THE DRAWINGS

FIG. 1 shows an ophthalmoscopy lens adapter **100** according to an exemplary embodiment of the invention.

FIGs. 2-3 show macro lens adapters **200**, **300** according to exemplary embodiments of the invention.

FIGs. 4-5 show exploded views of the mobile ophthalmoscopy system or kit according to exemplary embodiments of the invention. **FIG. 4** shows part of ophthalmoscopy lens adapter **100** with macro

lens adapter **200**. **FIG. 5** shows part of ophthalmoscopy lens adapter **100** with macro lens adapter **300**.

FIGs. 6-9 show various views of the mobile ophthalmoscopy system or kit according to an exemplary embodiment of the invention with the mobile imaging device and its casing to which the ophthalmoscopy lens adapter **100** and macro lens adapter **200** are adapted. **FIG. 6** is a top view, **FIG. 7** is a frontal view showing the coaxial alignment of the lenses, **FIG. 8** is a three-dimensional view, and **FIG. 9** is a side view.

FIGs. 10-13 show various views of the mobile ophthalmoscopy system or kit according to an exemplary embodiment of the invention with the mobile imaging device and its casing to which the ophthalmoscopy lens adapter **100** and macro lens adapter **300** are adapted. **FIG. 10** is a top view, **FIG. 11** is a frontal view showing the coaxial alignment of the lenses, **FIG. 12** is a three-dimensional view, and **FIG. 13** is a side view.

FIGs. 14-15 show various views of the mobile ophthalmoscopy system or kit according to an exemplary embodiment of the invention with the mobile imaging device and its casing to which the ophthalmoscopy lens adapter **100** and macro lens adapter **200** are adapted. **FIG. 14** is is a three-dimensional view, and **FIG. 15** is a side view. In both examples lens mount **120** has been folded (flush) with respect to the telescoping arm **110**, which has been minimized in size by sliding segment **112** within segment **114**.

The sizing of the opening **126** of the lens mount **120** matches the diameter of the arm segment(s) **112**, **114** of the telescoping arm **110**.

DETAILED DESCRIPTION

In a first embodiment of the invention a modular lens adapter system or kit is provided for anterior and posterior segment ophthalmoscopy in a mobile fashion. In a second embodiment of the invention a modular lens adapter system or kit is provided for anterior, posterior, and iridocorneal angle segment ophthalmoscopy in a mobile fashion. Adapter modules for imaging each of the eye segments can be removable attached to a mobile imaging device as desired by the user making mobile ophthalmoscopy possible.

Examples of mobile imaging devices are phones, smartphones (e.g. iPhone), tablet computing devices (e.g. iPad), high definition webcam (but wired and wireless), as well as digital cameras and video cameras with wireless and/or Bluetooth connectivity, all with at least a camera option for making still images and/or video. The exemplary embodiments are portrayed with an iPhone and different adapter modules, although these embodiments are easily adapted to other smartphone brands and mobile devices as specified above.

Posterior Segment Adapter Module

A first adapter module as shown in **FIG. 1** is an ophthalmoscopy lens adapter

100, which can be used for imaging the posterior segment of an eye. In this example, the ophthalmoscopy lens adapter **100** has a telescoping arm **110** with two segments **112**, **114**, where segment **112** can slide within the shaft of segment **114**. In another embodiment, there are three or more telescoping segments that enable the adapter to collapse to a smaller size and extend to a broader range of lengths. In yet another embodiment, there is only one segment, which is not telescopic and at a fixed length.

The slideable shaft allows for adjustment of the working distance (adjusting the focal point) between the mobile imaging device and an ophthalmoscopy lens mounted to ophthalmoscopy lens adapter **100** via lens mount **120**. The telescoping arm **110** can vary the working distance of lens mount **120** (i.e. the mounted ophthalmoscopy lens) relative to the mobile phone mount **130** in a range of 1 cm to 20 cm. To assist in maintaining and/or guiding of a desired working position of segment **112** with respect to segment **114**, an array with bumps **112''** can be fabricated along the top surface of segment **112**. Inside the shaft of segment **114**, facing toward the bumps **112''** one or more bumps (not shown), with similar dimension as the bumps in array **112''**, could be positioned such that they would line up with bumps **112''** and provide relatively more friction to assist in the maintenance of the desired working distance of the telescoping arm **110**. The one or more bumps within segment **114** could be positioned anywhere inside the segment wall of segment **114**. In a preferred embodiment, the one or more bumps could be positioned on the inner wall of the rectangular portion that is created by slits **114''**. The

rectangular portion facilitates easier sliding of the shafts as it decreases the friction between the bumps of segment **112** and **114** due to the fact that the rectangular portion would slightly bend outward with respect to its segment.

A telescoping arm like **110** is one of the various possible mechanisms to adjust the working distance, as a skilled artisan would appreciate. Various other mechanisms could also work, such as folding or collapsing arm segments with joints and therefore the invention is not limited to telescoping segments. The objective of the telescopic arms or even the folding or collapsing arm segments is that the size can be minimized for easy storage. In one example with the same objective of minimizing space, the telescoping arms could also be separated from each other.

Telescoping arm **110** has two ends: one end **112'** for segment **112** and the other end **114'** for segment **114**. At end **112'** lens mount **120** is attached. In the example of **FIG. 1**, lens mount **120** is adapted or movably fixed to segment **112** by means of a joint or hinge mechanism, which is made up by joint/hinge parts **122** and **124**. The joint mechanism allows lens mount **120** to be rotated in different positions with respect to segment **112**.

Lens mount **120** is sized to accommodate an ophthalmoscopy lens (not shown) in the range of 10D to 60D, such as a 14D, 20D, 22D, 28D, 30D, 40D, or 54D condensing lens for indirect ophthalmoscopy. The working distance between lens mount **120** and the mobile imaging device is about 5.75" in the

case of an iPhone couple to a Volk Panretinal 2.2 lens, but will vary depending on the combination of mobile device and ophthalmoscopy lens power. Ophthalmoscopy lens can be easily mounted and removed from the inner diameter **124** of lens mount **120**. In a preferred embodiment, inner diameter **124** of lens mount **120** has a slightly undersized fit to allow gripping of the ophthalmoscopy lens for easy insertion and removal. In another preferred embodiment, opening **126** would be desirable to make the ring of lens mount **120** more flexible to allow easy insertion and removal of the ophthalmoscopy lens. Another design objective of opening **126** relates to minimizing space for the ophthalmoscopy lens adapter **100**. It could be desirable that the lens mount **120** can be folded to be parallel and flush with the telescoping arm **110** to minimize space (see **FIGs. 14-15**). In other embodiments, a clamp mechanism can be used to hold the lens. The clamp could utilize a ratchet type mechanism, a spring mechanism, an adjustable belt, a vice, an elastic band, or screws that can be adjusted to hold the lens in place. In one example, it could be desirable that the ophthalmoscopy lens adapter **100** be minimized in size so that it can be stored in a pocket of a garment, e.g. a pocket of a doctor's coat. Regarding weight, the ophthalmoscopy lens adapter **100**, without holding the ophthalmoscopy lens, is preferably less than 100 grams (e.g. made from a polymer or a lightweight metal, such as aluminum) and can be manufactured with any type of process including injection molding and various 3D printing processes.

At end **114'** a mobile imaging device mount **130** is attached to which a mobile

imaging device can be removably held. In a preferred embodiment, the inner spacing **130'** of the mobile imaging device mount has a slightly undersized fit to allow gripping or snap fitting to the mobile imaging device or casing of the mobile imaging device for easy attachment and de-attachment. The mobile imaging device mount could be adjustable to accommodate any sized phone or casing, either through an elastic mechanism, a spring mechanism, an adjustable belt-type mechanism, a vise mechanism, or other type of mechanism that would allow the mount to grip the phone and hold it in position.

Further to the importance in the design and minimization of space of the ophthalmoscopy lens adapter **100** is the structural aspect of an un-encased optical pathway between the mobile imaging device mount **130** and the ophthalmoscopy lens mounted in lens mount **120**. In addition, the ophthalmoscopy lens adapter **100** of this invention does not need or have any reflective mirrors.

In another embodiment, the adapter could also include a spacer element that protrudes from the shaft on the ophthalmoscopy lens side that either can rest on the patient's face (such as on the cheek under the eye) or can rest on the user's thumb while the index finder is used to hold the patient's eyelid open. The spacer element may be straight, curved, contain a ring element that can fit around the user's thumb, and/or contain a padding element that rests on the patient's face. The spacer element may also be adjustable in length and be

telescoped back into the adapter's main shaft or be folded back on to the adapter's main shaft.

Anterior Segment Adapter Module

A second adapter module (**FIG. 2**) is a macro lens adapter **200**, which can be used for imaging the anterior segment of the eye. The macro lens adapter has a mount for a macro lens **210** capable of showing a close up, focused, magnified view of patient's anterior eye structures. The macro lens is either completely removable or can be reversibly positioned in front of the mobile device camera lens through either a sliding, magnetic, or hinge mechanism. The macro lens may be a commercially available macro lens manufactured specifically for smartphones. In this example, macro lens **210** distinguishes a holding area **212** and a lens area **214**. Macro lens **210** can easily be inserted or removed from open slot area **220** of the macro lens adapter **200**. Open slot area **220** is sized such that when the macro lens **210** has been slit into open slot area **220** a user will be able to view the lens area **214** of macro lens **210** through opening **222**. The macro lens adapter **200** further distinguishes a light source **230**, with an on/off switch **240**, to focus light onto an eye. Preferably, the light source **230** is an LED light source with an adjustable intensity that can be adjusted with, for example, dial control **250**. The control element for the LED intensity may be a dial, but could also be, but not limited to, a knob, a sliding switch, a haptic touch button, or a button. Macro lens adapter **200** can be adapted to the mobile imaging device by using any type of attaching means such as Velcro, a snap fit mechanism, a slide-and-hold mechanism or the like.

For this adapter the back area (facing into the figure) is adapted to the mobile imaging device.

FIG. 3 shows another embodiment of the second adapter module. Macro lens adapter **300** has a macro lens **310**. In this example, macro lens distinguishes a holding area **312** and a lens area **314**. Macro lens **310** can easily be inserted or removed from open slot area **320** of the macro lens adapter **300**. In this example, macro lens **310** can be a single-focus lens or a manually adjustable focus lens where hold area **312** can be used for manual focusing. Open slot area **320** is sized such that when the macro lens **310** has been placed into open slot area **320** a user will be able to view through the lens area **314** of macro lens **310**. The macro lens adapter **300** further distinguishes a light source **330**, with an on/off switch **340**, to focus light onto an eye. Preferably, the light source **330** is an LED light source with an adjustable intensity that can be adjusted with for example dial control **350**. Macro lens adapter **300** has a bracket **350** with a space **352** which is defined to fit the width of an area of a mobile imaging device so that the macro lens adapter **300** can either be slit onto (when bracket **350** has no joint mechanism) or clipped onto (when bracket **350** does have a joint or spring mechanism) the mobile imaging device. For this adapter the back area (facing into the figure) is adapted to the mobile imaging device.

In another embodiment, the macro lens can be fixed within a wider slot and able to slide onto and off of the front of the mobile device camera lens. In yet

another embodiment, the macro lens can be magnetically attached to the front of the adapter and can slide onto and off of the front of the mobile device camera lens. In still another embodiment, the macro lens can be hinged to the front of the adapter and can be positioned via the hinge onto and off of the front of the mobile device camera lens. The macro lens may have a focal length ranging from about 1 cm to about 20 cm.

Iridocorneal Angle Segment Adapter

A third adapter module is a gonioscopy lens adapter for imaging the iridocorneal angle of the eye. The gonioscopy lens adapter is able to hold a gonioscopy lens such as, but not limited, to a Goldmann 3-mirror lens, a Sussman gonioscopy lens, a Posner gonioscopy lens, or a Koeppe lens and could be a single focus lens or an adjustable focus lens. The gonioscopy lens adapter is similar to the macro lens adapters **200**, **300** where instead of using a macro lens a gonioscopy lens can be used, but is positioned in such a way that the illumination from the LED light source passes through the lens, and the gonioscopy lens makes contact with patients eyes to eliminate total internal reflection, which is a principle that is known in the art of gonioscopy.

Variable Light Source

A fourth adapter module is a variable intensity light source. In one embodiment, the variable intensity light source is an external variable intensity LED, which can be removably adapted to the mobile imaging device as shown in **FIGs. 2-3**. With respect to the use of ophthalmoscopy lens adapter **100**, the

light source of macro lens adapter **200, 300** can be used for application of the ophthalmoscopy lens adapter **100**. When both adapters **100** and **200/300** are used in conjunction, the macro lens or gonioscopy lens for adapters **200/300** can be removed so that these lenses would not interfere with the posterior segment analysis of the eye. However, absent of adapters **200/300** either the ophthalmoscopy lens adapter **100** could (i) have its own built-in variable light source for example of the mobile imaging device mount (not shown), or (ii) use a variable light source built-in to the mobile imaging device or operable via an application running on the device in connection with e.g. a flash. Key to the use of the ophthalmoscopy lens adapter **100** is the fact that the variable intensity light source can be coaxially aligned with the ophthalmoscopy lens and the lens of the mobile imaging device. Key to the use of the macro lens adapters **200/300** is the fact that the variable intensity light source can be coaxially aligned with the macro lens or gonioscopy lens.

Ophthalmoscopy System or Kit Modularity

FIG. 4 shows an exploded view how the ophthalmoscopy lens adapter and the macro lens adapter **200** can be adapted to a mobile imaging device **410** (here portrayed as an iPhone). In this example, a casing can be used that would allow both adapters to be easily connected. Casing could have two parts, **420**, **422** that could be snap fit onto mobile imaging device **410** or to each other. Parts **420**, **422** could fully enclose the mobile imaging device **410** yet allowing for an opening for the screen/button area of the mobile imaging device **410,** or partially enclose where there is at least no enclosing part for the screen/button

area of the mobile imaging device **410**. Part **420** distinguishes an area **430** to which the macro lens adapter **200** can be placed/positioned. Part **420** also features an opening **432** that lines up lens of the mobile imaging device **410** and the macro lens mounted in open slot area **220**. Preferably, the macro lens fits as close as possible to the lens of the mobile imaging device. In addition, the macro lens should be coaxially aligned with the lens of the mobile imaging device. A ridge **440** is featured on part **420** and serves as a guide to place mobile imaging lens mount **130** onto part **420**, which allows for proper coaxially alignment of the ophthalmoscopy lens with the lens of the mobile imaging device.

FIG. 5 shows an exploded view how the ophthalmoscopy lens adapter and the second example of the macro lens adapter **300** can be adapted to a mobile imaging device **410** (here portrayed as an iPhone). Similar to the example in **FIG. 4**, the macro lens fits as close as possible to the lens of the mobile imaging device. In addition, the macro lens should be coaxially aligned with the lens of the mobile imaging device.

Having a system or kit with the various lens adapter modules, respective lenses and the mobile imaging device, a user is equipped with tools for mobile ophthalmoscopy. The user can setup for various mobile ophthalmoscopy imaging applications:

- Posterior segment ophthalmoscopy using the ophthalmoscopy lens adapter with the mobile imaging device and its internal (variable

intensity) light source.

- Posterior segment ophthalmoscopy using the ophthalmoscopy lens adapter with the mobile imaging device and an external (variable intensity) light source.
- Posterior segment ophthalmoscopy using the ophthalmoscopy lens adapter with the mobile imaging device using the (variable intensity) light source of the macro lens adapter (without the macro lens mounted).
- Anterior segment ophthalmoscopy using the macro lens adapter and mounted a macro lens with the mobile imaging device optionally using the (variable intensity) light source of the macro lens adapter, where the ophthalmoscopy lens adapter is detached from the mobile imaging device.
- Anterior segment ophthalmoscopy using the macro lens adapter and mounted a macro lens with the mobile imaging device and its internal (variable intensity) light source, where the ophthalmoscopy lens adapter is detached from the mobile imaging device.
- Iridocorneal angle ophthalmoscopy (gonioscopy) using a modified macro lens adapter that allows mounting of a gonioscopy lens with the mobile imaging device optionally using the (variable intensity) light source of the macro lens adapter or the mobile device's internal flash.

Variations

The position of the lens mount of the ophthalmoscopy lens adapter should always coaxially aligned with the lens of the mobile imaging device. However, the telescopic arm (or equivalent mechanism) does not have to be mounted as shown in the figures since the mobile imaging device mount could take various shapes and be adapted at various locations with respect to the mobile imaging device.

The telescoping arm can be permanently or reversibly mounted to the mobile device case. In either case, the telescoping arm may be foldable such that the arm and lens mount distal to it are moved aside to allow the user to hold the mobile device closer to the patient's eye when using, for example, the macro lens adapter. The telescoping arm may be attached to the case of the phone either through a two-point fixation undersized gripping mechanism as shown in the drawings, or through other mechanisms such as a depression within the case that fits the telescoping arm (female-male connectivity), a reversible locking fit wherein a button is pressed to release the arm from the case, a magnetic attachment mechanism, or a suction attachment mechanism.

The aperture of the LED light source could be adjustable to create varying diameters for the collimated beam. Blue, red-free, and other types of lighting may be used, and infrared lighting may also be used. In addition, various filters could be used for the light source, for instance, to physically reduce the intensity of the light. This method could be used in place of the variable

intensity light source, to provide one or more barrier-type filters for the light. Examples of such filters are neutral density filters and polarizing filters.

In addition, certain elements may be positioned in front of the camera lens to enhance image quality. Such elements include, for example, additional lenses that will serve to increase the magnification of the virtual image created by the ophthalmoscopy lens seen on the mobile imaging device screen (e.g. to enable to occupy a greater percentage of the screen area) as well as filtering elements such as polarizing filters, neutral density filters, and pinhole filters that can reduce glare and light scatter.

The macro lens could be a rotating or sliding macro lens set where user could select from macro, blue filter, high magnification and wide angle lenses by rotation the lens set in front of the lens of the mobile imaging device (not shown).

The macro lens adapter could further include an eye rest, e.g. a circular protrusion around the macro lens which could be place around the eye, to assist in positioning and stabilizing the macro lens adapter and mobile imaging device system and its various modular forms in front of the eye.

The variable intensity external light source could be used with or without a mirror system or fiber optic element to guide the light.

The battery or batteries for the light source may be enclosed within the telescopic shaft, which would have a dual effect of favorably weighting the device toward the side of the phone and also hiding away additional bulk on the device.

The external light source and macro lens adapter component can be attachable to the phone either through a clip mechanism or a plate-attachment mechanism to a case. A magnetic mechanism may also be used that attaches these components either directly to the phone or to the case on the phone.

In all cases, the phone may be attached directly to the components of the kit or in part through a case, which can be positioned around the phone either through a slider-case configuration (as shown in the figures) or a grip-fit configuration wherein the material of the case is flexible enough to surround the phone.

An external fixation target could be added for the opposite eye that can be a blinking light or other form of adjustable fixation target. A moveable extension with a blinking light tip could be plugged into a phone audio jack or directly to the adapter itself (such as to the telescoping shaft or another part of either the anterior or posterior adapter) to direct a patient's gaze toward the light.

The LED light could be focused into an adjustable slit beam that can be

directed through the cornea at an angle, mimicking the action of a traditional slit lamp. The LED light may also be set to a fixed intensity (without a variable intensity function).

The system could be enhanced to have a dedicated software application running on the mobile imaging device to assist in image capture, light control, image analysis, image enhancement, data storage and data sharing as are common features of applications running on, for example, smartphones.

CLAIMS

What is claimed is:

1. A modular lens adapter system for mobile anterior and posterior segment ophthalmoscopy, comprising:

(a) a variable intensity light source;

(b) an ophthalmoscopy lens adapter for imaging the posterior segment of an eye,

wherein the ophthalmoscopy lens adapter comprises a telescoping arm with two ends, wherein on the one end the telescoping arm comprises a lens mount configured to removably mount an ophthalmoscopy lens, and wherein on the other end the telescoping arm comprises a mobile imaging device mount configured to removably mount a mobile imaging device,

wherein the telescoping arm can be oriented to position the ophthalmoscopy lens at various distances with respect to the lens of the mobile imaging device,

wherein the ophthalmoscopy lens is configured to be coaxially aligned with the lens of the mobile imaging device, and

wherein the variable intensity light source is configured to be coaxially aligned with the ophthalmoscopy lens and the lens of the mobile imaging device; and

(c) a macro lens adapter comprising a lens mount configured to removably mount a macro lens for imaging the anterior segment of

the eye, wherein the macro lens adapter is configured to be removably adapted to the mobile imaging device, wherein the variable intensity light source is configured to be coaxially aligned with the macro lens, and wherein the macro lens is configured to be coaxially aligned with the lens of the mobile imaging device.

2. The system as set forth in claim 1, wherein the ophthalmoscopy lens adapter has an un-encased optical pathway between the mobile imaging device mount and the ophthalmoscopy lens.

3. The system as set forth in claim 1, wherein the ophthalmoscopy lens adapter does not have reflective mirrors.

4. The system as set forth in claim 1, wherein the variable intensity light source and the macro lens adapter are integrated as one adapter configured.

5. The system as set forth in claim 1, wherein the variable intensity light source is an external variable intensity LED adapter, configured to be removably adapted to the mobile imaging device.

6. The system as set forth in claim 1, wherein the variable intensity light source is a variable intensity LED built-in to the mobile imaging device.

7. The system as set forth in claim 1, wherein the telescoping arm can position the lens mount from the mobile phone mount in a range of 1 cm to 20 cm.

8. The system as set forth in claim 1, wherein the ophthalmoscopy lens adapter, without holding the ophthalmoscopy lens, is less than 100 grams.

9. The system as set forth in claim 1, wherein the lens mount of the macro lens adapter is configured to fit as close as possible to the lens of the mobile imaging device.

10. The system as set forth in claim 1, wherein the lens mount of the ophthalmoscopy lens adapter can be folded to be parallel and flush with the telescoping arm to minimize space.

11. The system as set forth in claim 1, wherein the ophthalmoscopy lens adapter can be minimized in size so that it can be stored in a pocket of a garment.

12. The system as set forth in claim 1, further comprising a gonioscopy lens adapter having a lens mount configured to removably mount a gonioscopy lens for imaging the iridocorneal angle of the eye,

wherein the gonioscopy lens adapter is configured to be removably adapted to the mobile imaging device, wherein the variable intensity light source is configured to be coaxially aligned with the gonioscopy lens, and wherein the gonioscopy lens adapter is configured to be coaxially aligned with the lens of the mobile imaging device.

13. The system as set forth in claim 1, wherein the macro lens adapter is configured to mount a gonioscopy lens for imaging the iridocorneal angle of the eye.

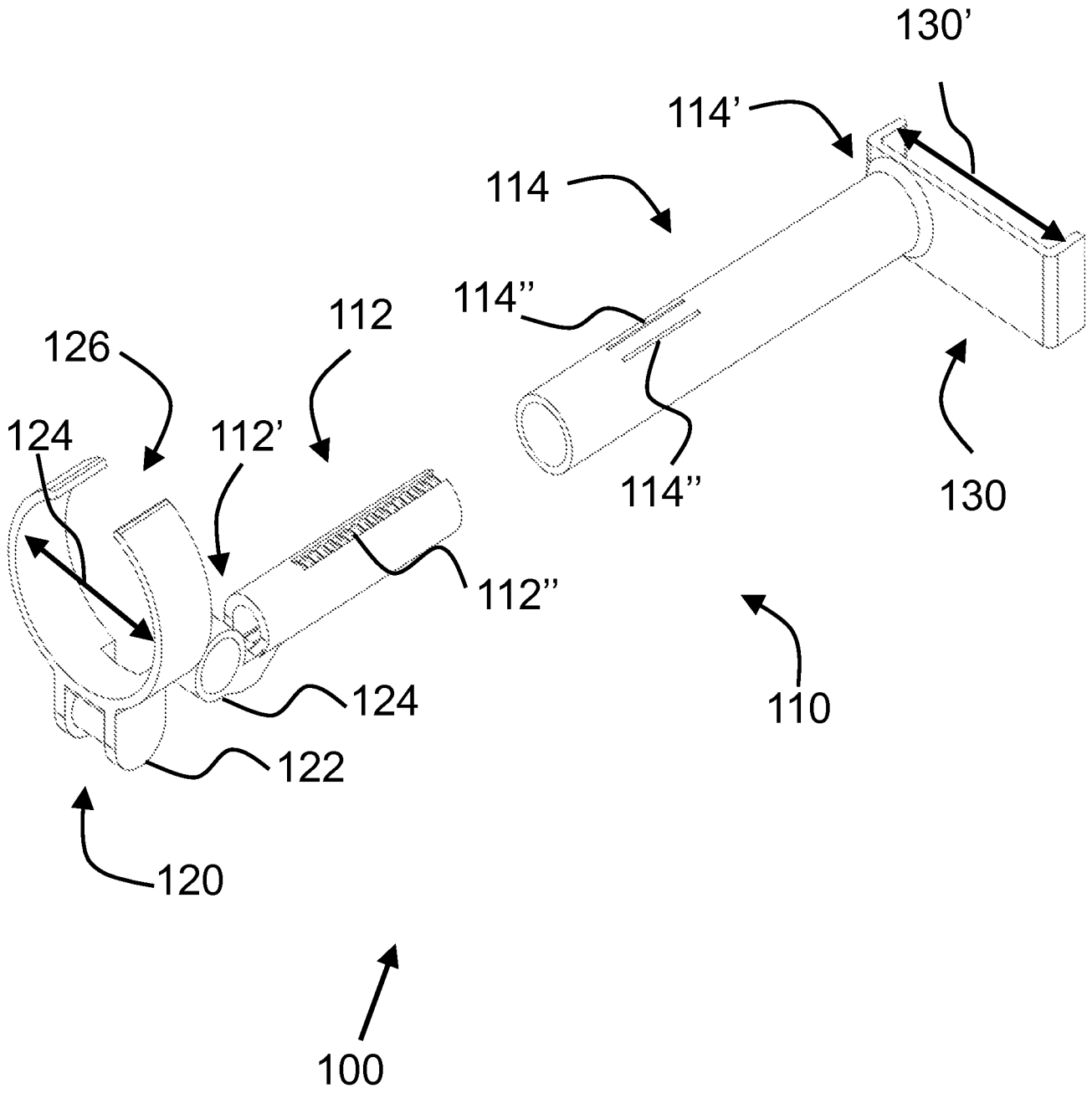

FIG. 1

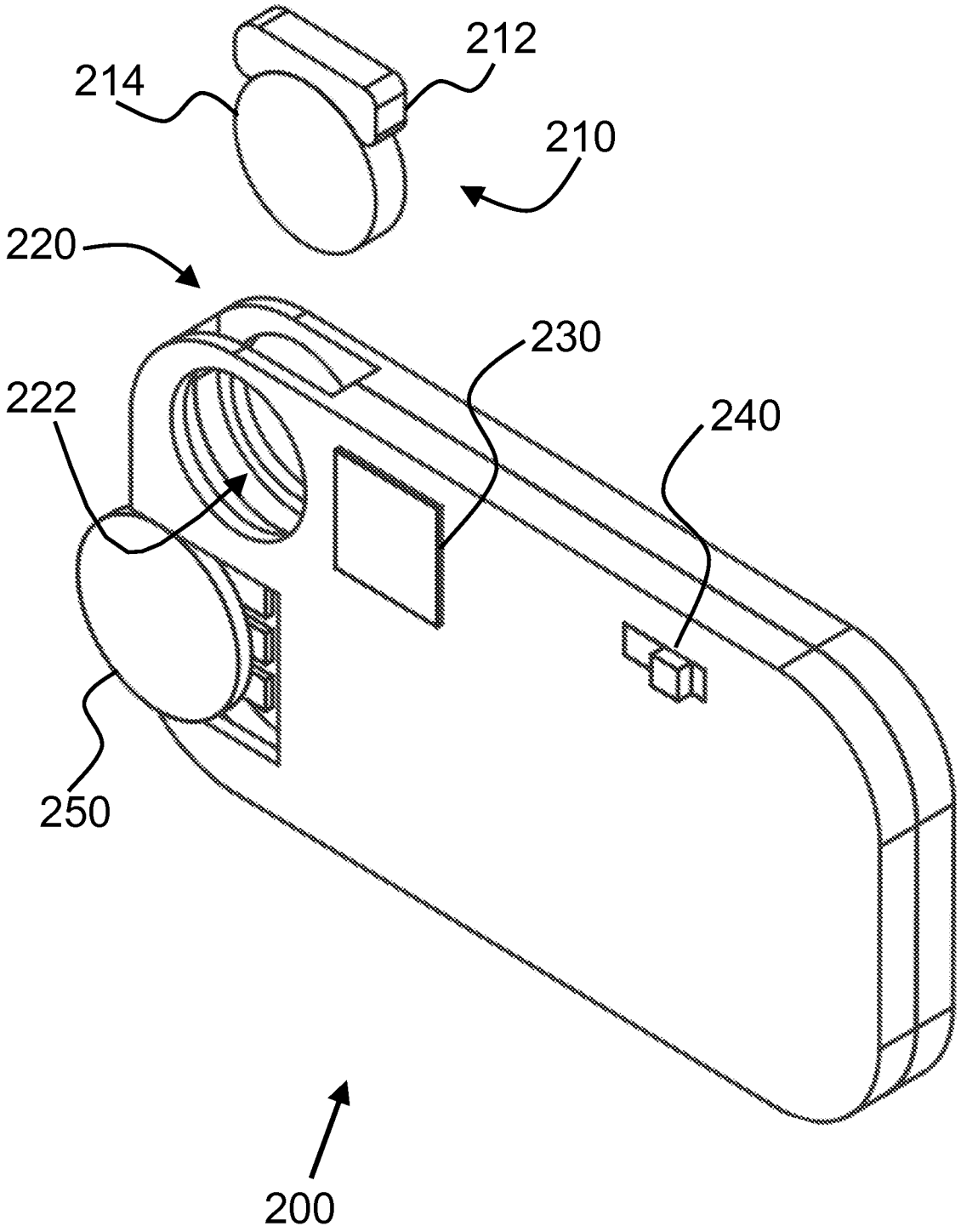

FIG. 2

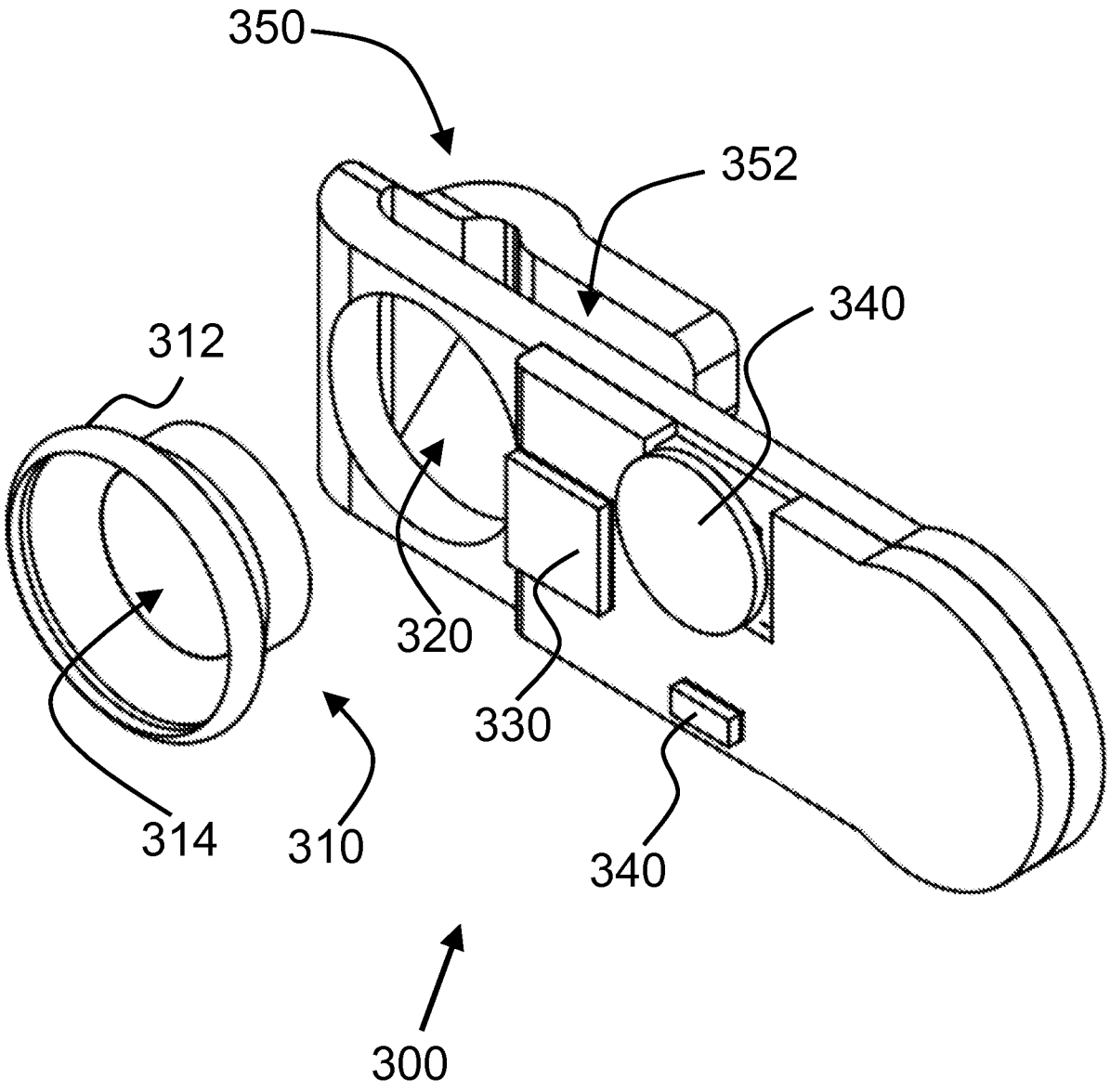

FIG. 3

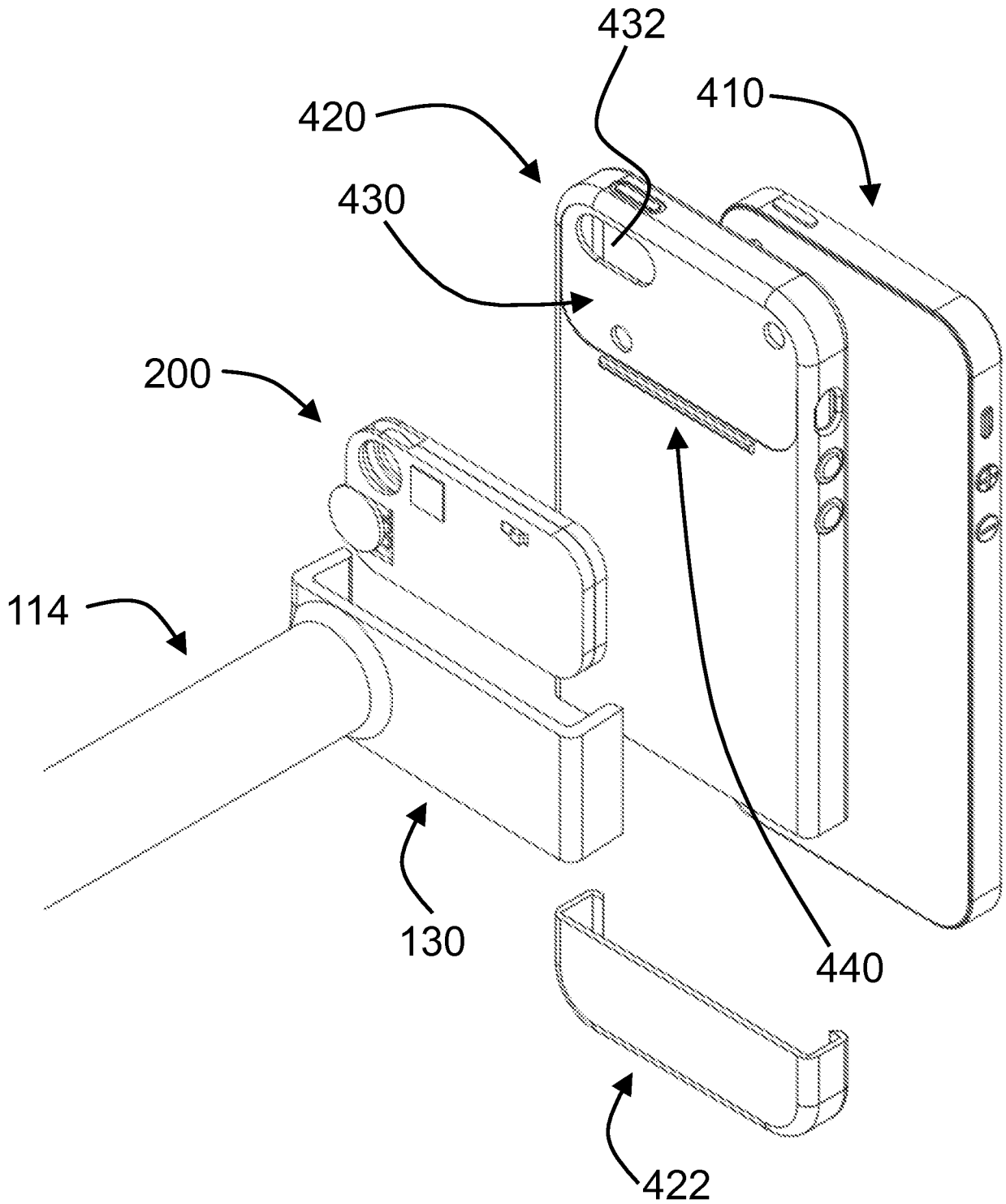

FIG. 4

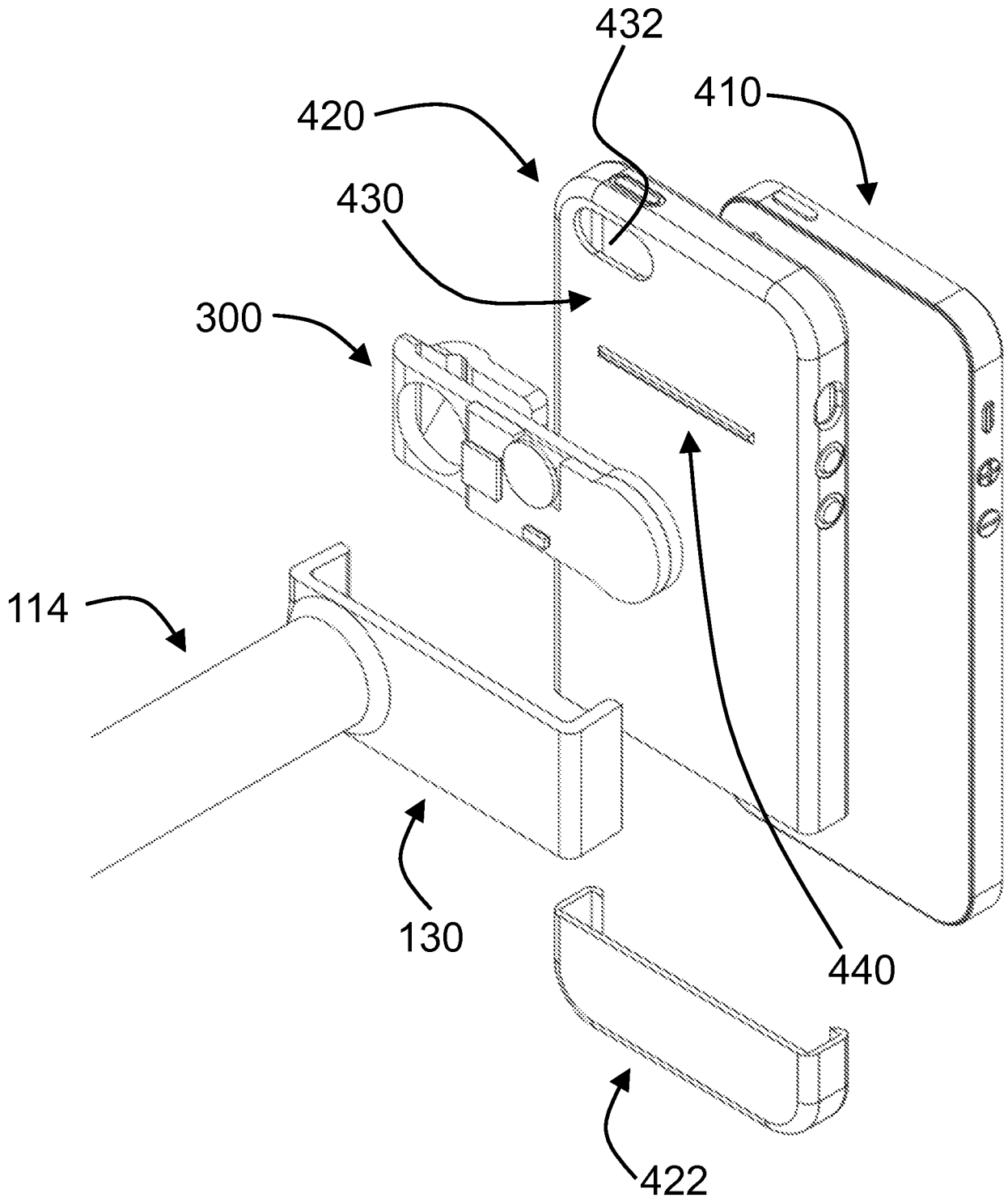

FIG. 5

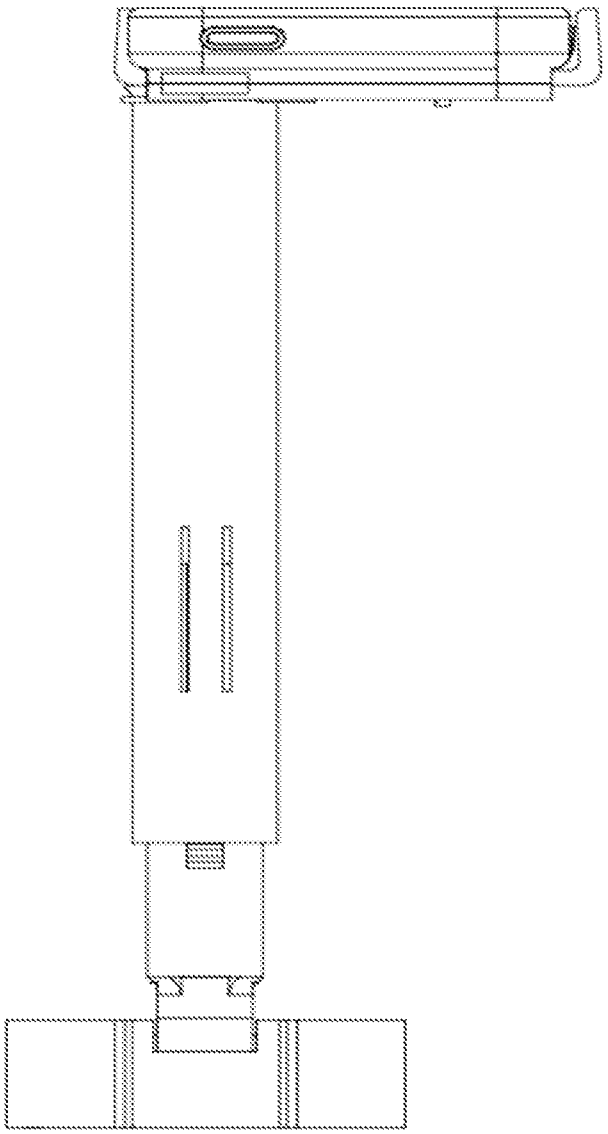

FIG. 6

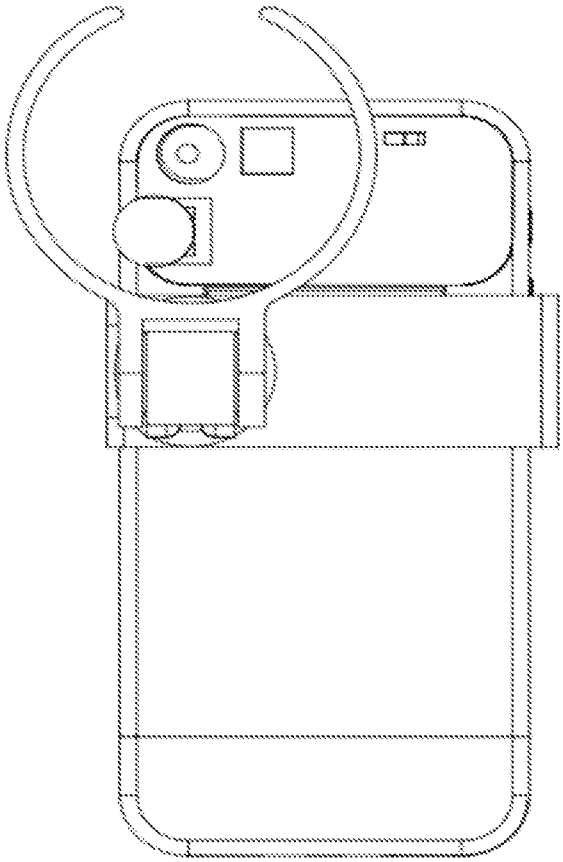

FIG. 7

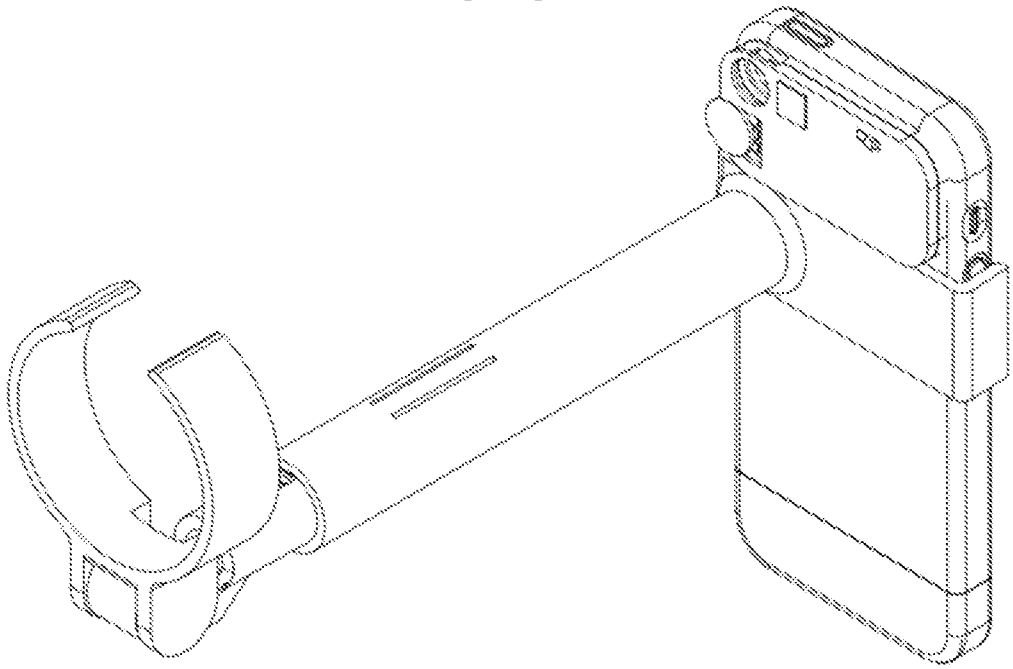

FIG. 8

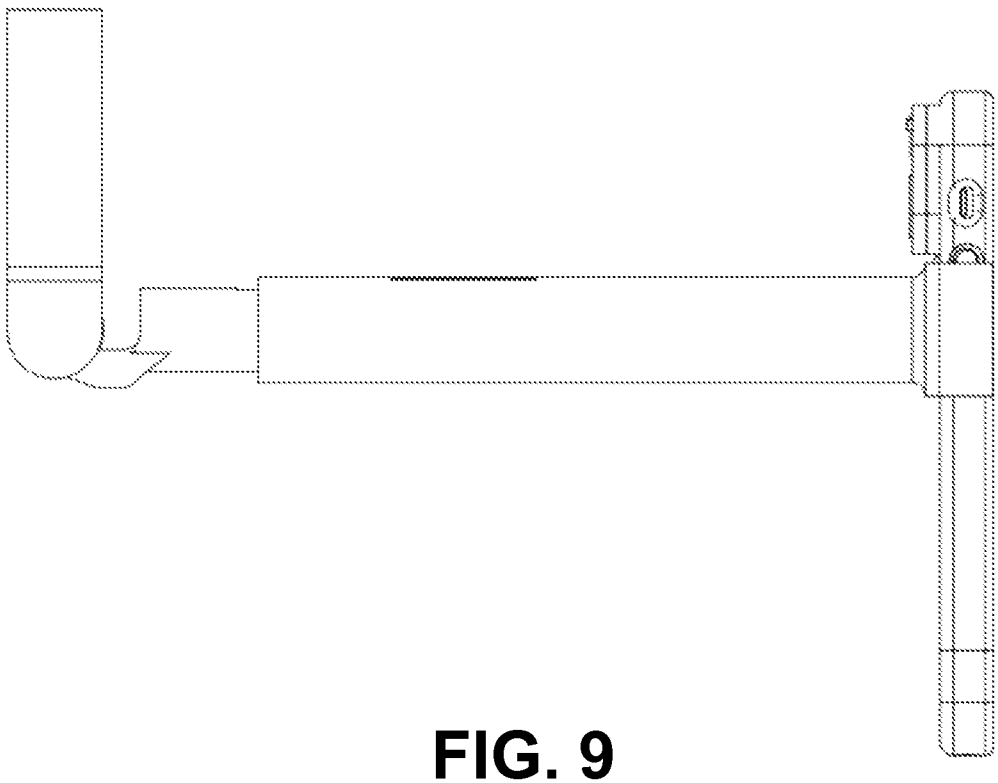

FIG. 9

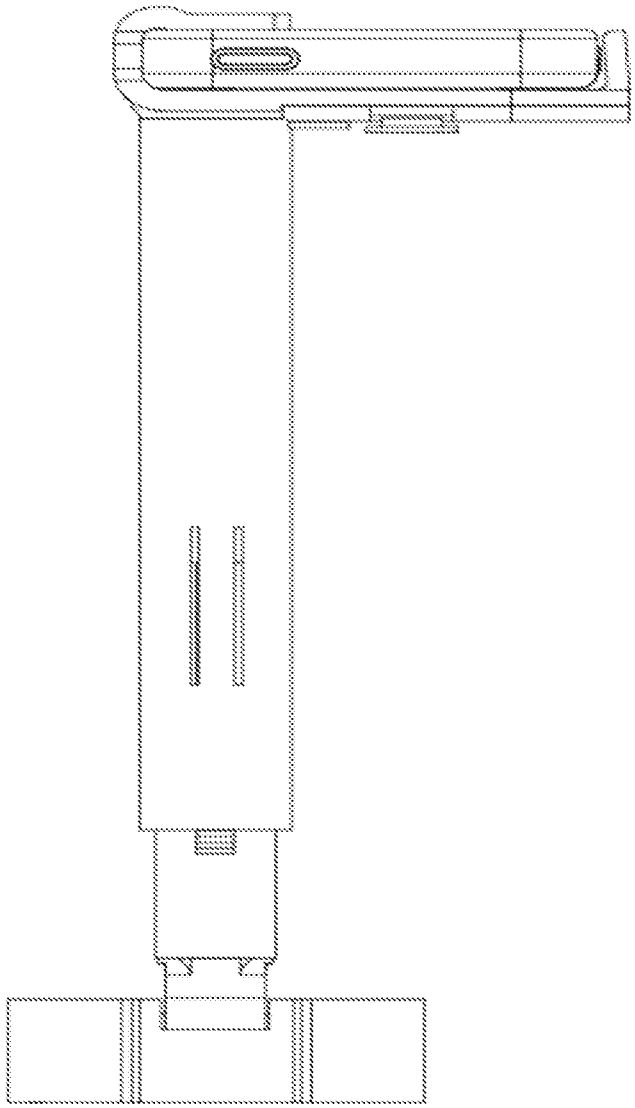

FIG. 10

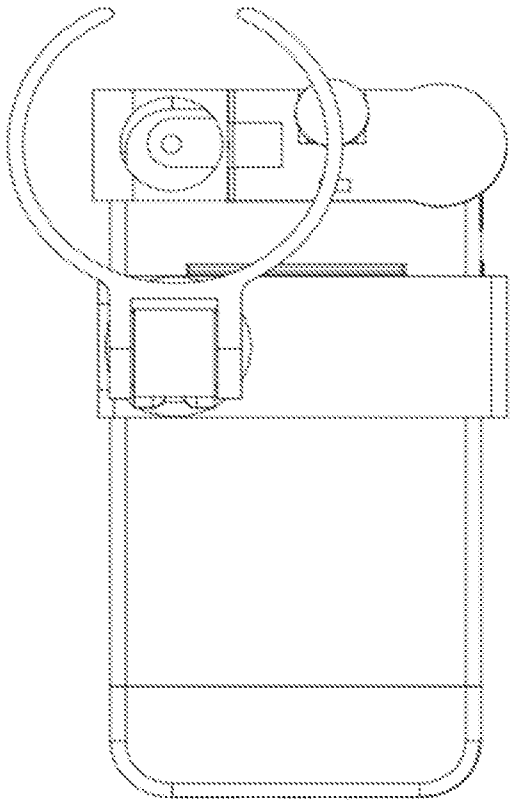

FIG. 11

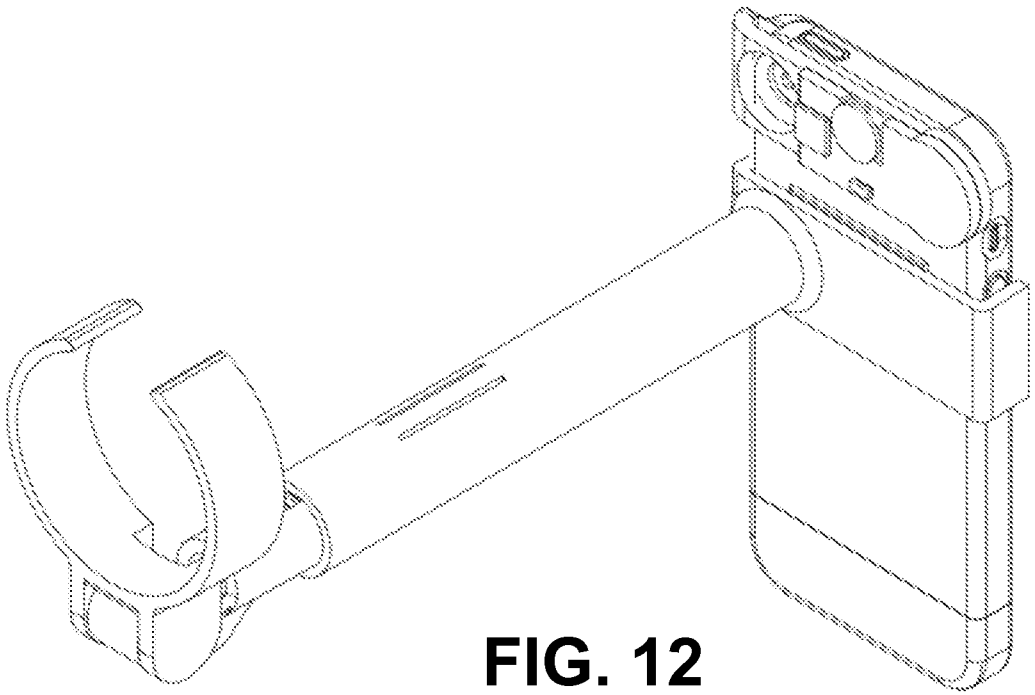

FIG. 12

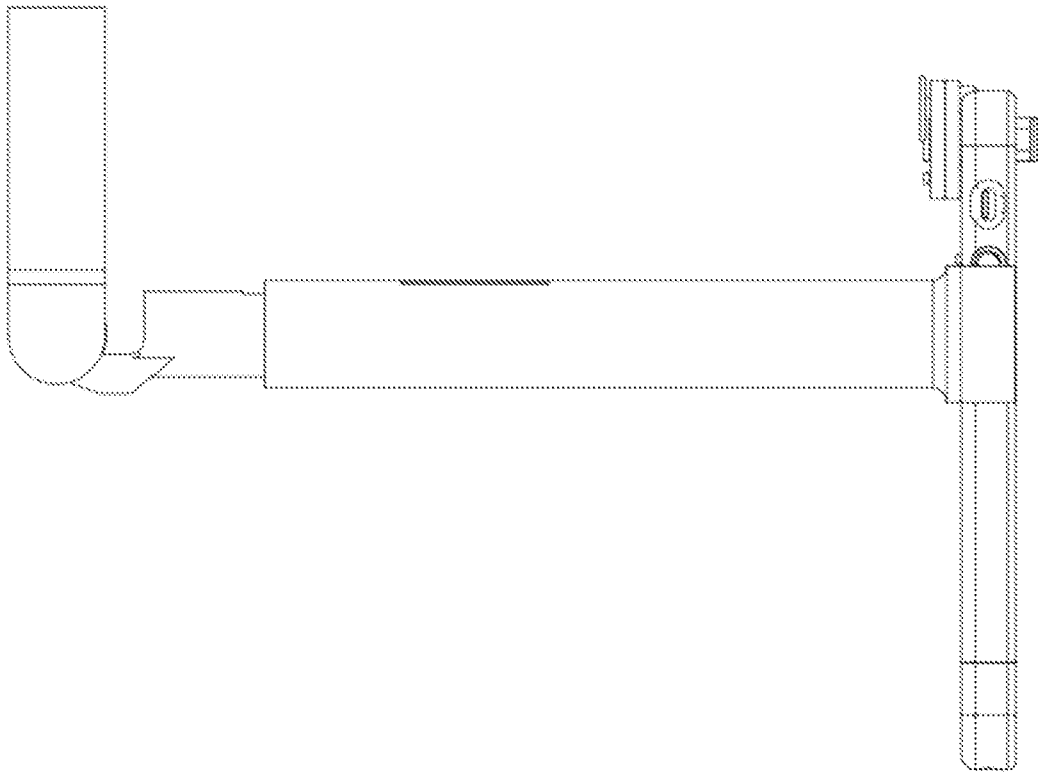

FIG. 13

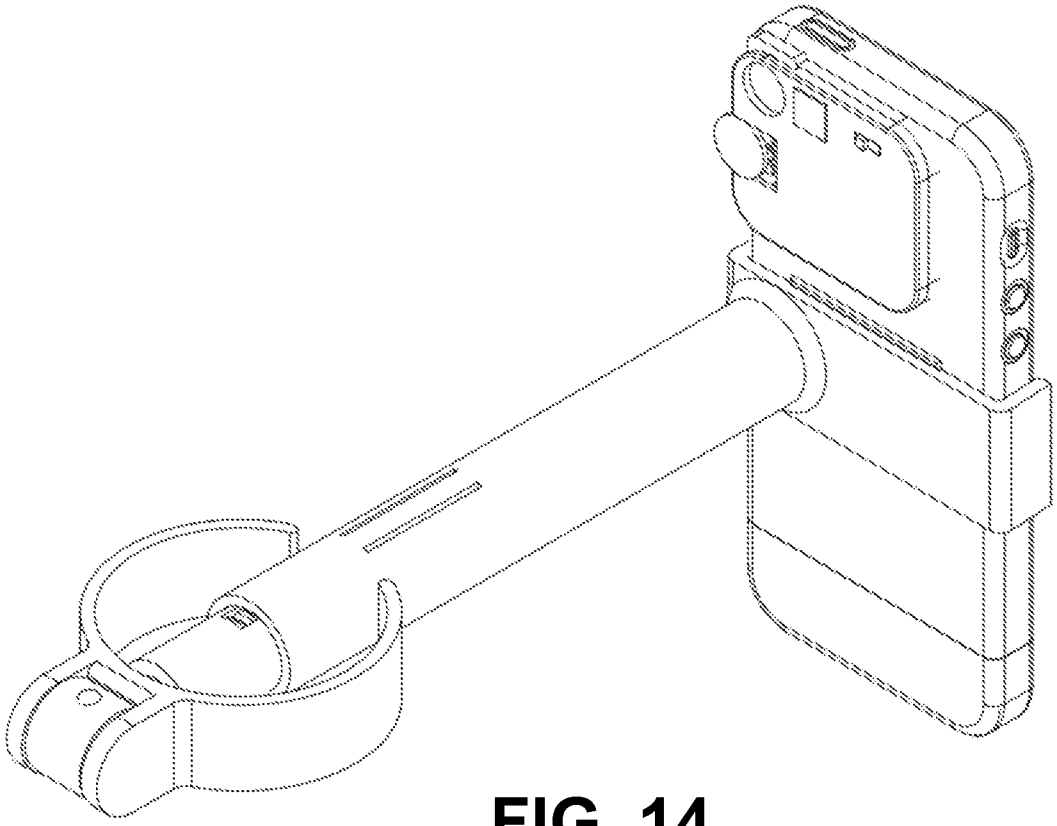

FIG. 14

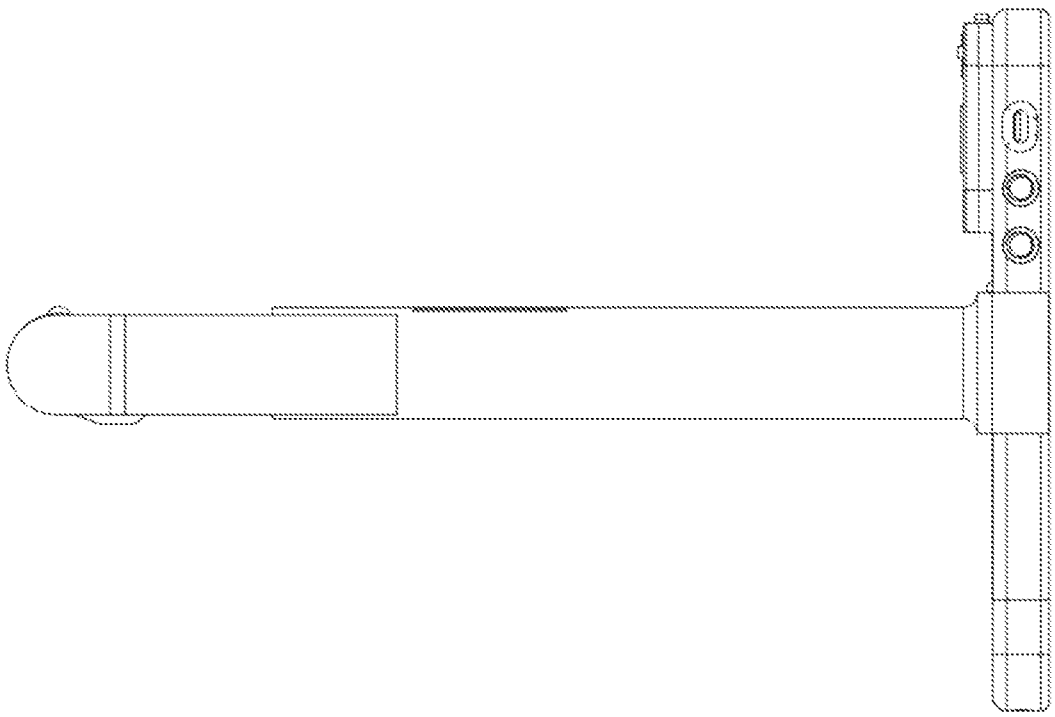

FIG. 15

PATENT COOPERATION TREATY

PCT

INTERNATIONAL SEARCH REPORT

(PCT Article 18 and Rules 43 and 44)

Applicant's or agent's file reference S13-195/PCT	FOR FURTHER ACTION	see Form PCT/ISA/220 as well as, where applicable, item 5 below.
International application No. PCT/US 14/40203	International filing date *(day/month/year)* 30 May 2014 (30.05.2014)	(Earliest) Priority Date *(day/month/year)* 31 May 2013 (31.05.2013)
Applicant THE BOARD OF TRUSTEES OF THE LELAND STANFORD JUNIOR UNIVERSITY		

This international search report has been prepared by this International Searching Authority and is transmitted to the applicant according to Article 18. A copy is being transmitted to the International Bureau.

This international search report consists of a total of 7 sheets.

☐ It is also accompanied by a copy of each prior art document cited in this report.

1. **Basis of the report**

a. With regard to the **language**, the international search was carried out on the basis of:

☒ the international application in the language in which it was filed.

☐ a translation of the international application into _____ which is the language of a translation furnished for the purposes of international search (Rules 12.3(a) and 23.1(b)).

b. ☐ This international search report has been established taking into account the **rectification of an obvious mistake** authorized by or notified to this Authority under Rule 91 (Rule 43.6*bis*(a)).

c. ☐ With regard to any **nucleotide and/or amino acid sequence** disclosed in the international application, see Box No. I.

2. ☐ **Certain claims were found unsearchable** (see Box No. II).

3. ☐ **Unity of invention is lacking** (see Box No. III).

4. With regard to the **title**,

☒ the text is approved as submitted by the applicant.

☐ the text has been established by this Authority to read as follows:

5. With regard to the **abstract**,

☒ the text is approved as submitted by the applicant.

☐ the text has been established, according to Rule 38.2, by this Authority as it appears in Box No. IV. The applicant may, within one month from the date of mailing of this international search report, submit comments to this Authority.

6. With regard to the **drawings**,

a. the figure of the **drawings** to be published with the abstract is Figure No. FIG. 8

☐ as suggested by the applicant.

☐ as selected by this Authority, because the applicant failed to suggest a figure.

☒ as selected by this Authority, because this figure better characterizes the invention.

b. ☐ none of the figures is to be published with the abstract.

INTERNATIONAL SEARCH REPORT

PCT/US2014/040203 07-11-2014

International application No.
PCT/US 14/40203

A. CLASSIFICATION OF SUBJECT MATTER

IPC(8) - A61B 3/10 (2014.01)
CPC - A61B 3/14

According to International Patent Classification (IPC) or to both national classification and IPC

B. FIELDS SEARCHED

Minimum documentation searched (classification system followed by classification symbols)
IPC: A61B 3/10 (2014.01)
CPC: A61B 3/14 (USPC: 351/206)

Documentation searched other than minimum documentation to the extent that such documents are included in the fields searched
IPC: A61B 3/117, A61B 3/12 (2014.01)
CPC: A61B 3/117, A61B 3/12, A61B 3/145, A61B 3/1208 (search term limited; see below)

Electronic data base consulted during the international search (name of data base and, where practicable, search terms used)
PatBase (All), Google (Web, Patents, Scholar)
Search terms: smart phone, smartphone, mobile device, iphone, phone, ophthalmoscop*, fundus, fundoscop*, gonios*, lens*, adapt*, macro*, eye, koeppe, gonioscop*, telescop*, mobile, fold*, iridocorneal

C. DOCUMENTS CONSIDERED TO BE RELEVANT

Category*	Citation of document, with indication, where appropriate, of the relevant passages	Relevant to claim No.
Y	WO 2012/176960 A1 (JUNG) 27 December 2012 (27.12.2012), entire document, especially Abstract, Fig 1-4, 7 and 8, para [0042], [0071], [0077] and [0078] of English language equivalent US 2014/132932 A1	1-13
Y	BASTAWROUS, Andrew. 'Smartphone fundoscopy'. In: Ophthalmology, 119 (2). 432-433.e2; author reply 433, 2012. ISSN 0161-6420, entire document, especially Fig 1a-2	1-13
Y	US 4,856,892 A (BEN-TOVIM) 15 August 1989 (15.08.1989), entire document, especially Fig 6-9, col 2, ln 15-30 and ln 45 to col 3, ln 22	1-13
P, Y	US 2014/132932 A1 (JUNG) 15 May 2014 (15.05.2014), entire document, especially Fig 1-4, 7 and 8, para [0042], [0071], [0077] and [0078]	1-13
P, A	US 2013/0293840 A1 (BARTELS) 07 November 2013 (07.11.2013), entire document	1-13
A	US 2011/0299036 A1 (GOLDENHOLZ) 08 December 2011 (08.12.2011), entire document	1-13
A	US 2011/0085138 A1 (FILAR) 14 April 2011 (14.04.2011), entire document	1-13
A	US 2005/0270484 A1 (MAEDA et al) 08 December 2005 (08.12.2005), entire document	1-13
A	'Making a webcam ophthalmoscope.' 16 September 2010 [online] Goteborgs University, Department of Ophthalmology. [retrieved 17 September 2014]. Retrieved from the Internet: <URL: http://www.oft.gu.se/webdiagnos/oft/oft.html>	1-13

☐ Further documents are listed in the continuation of Box C. ☐

* Special categories of cited documents:

"A" document defining the general state of the art which is not considered to be of particular relevance

"E" earlier application or patent but published on or after the international filing date

"L" document which may throw doubts on priority claim(s) or which is cited to establish the publication date of another citation or other special reason (as specified)

"O" document referring to an oral disclosure, use, exhibition or other means

"P" document published prior to the international filing date but later than the priority date claimed

"T" later document published after the international filing date or priority date and not in conflict with the application but cited to understand the principle or theory underlying the invention

"X" document of particular relevance; the claimed invention cannot be considered novel or cannot be considered to involve an inventive step when the document is taken alone

"Y" document of particular relevance; the claimed invention cannot be considered to involve an inventive step when the document is combined with one or more other such documents, such combination being obvious to a person skilled in the art

"&" document member of the same patent family

Date of the actual completion of the international search	Date of mailing of the international search report
18 September 2014 (18.09.2014)	07 NOV 2014

Name and mailing address of the ISA/US	Authorized officer:
Mail Stop PCT, Attn: ISA/US, Commissioner for Patents P.O. Box 1450, Alexandria, Virginia 22313-1450 Facsimile No. 571-273-3201	Lee W. Young PCT Helpdesk: 571-272-4300 PCT OSP: 571-272-7774