Feb. 19, 1957 W. M. ERICSON 2,781,557

ACOUSTICAL AND AIR DISTRIBUTING CEILING CONSTRUCTION

Filed Nov. 15, 1951

Fig. 1

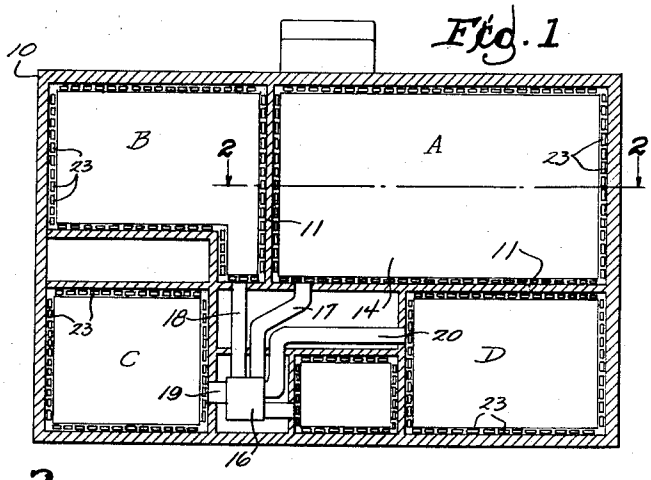

Fig. 3

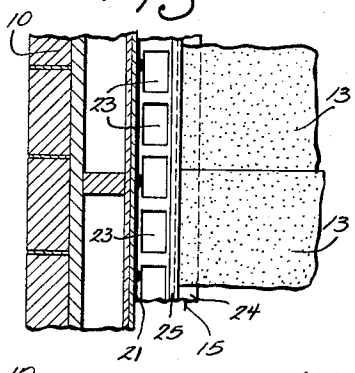

Fig. 2

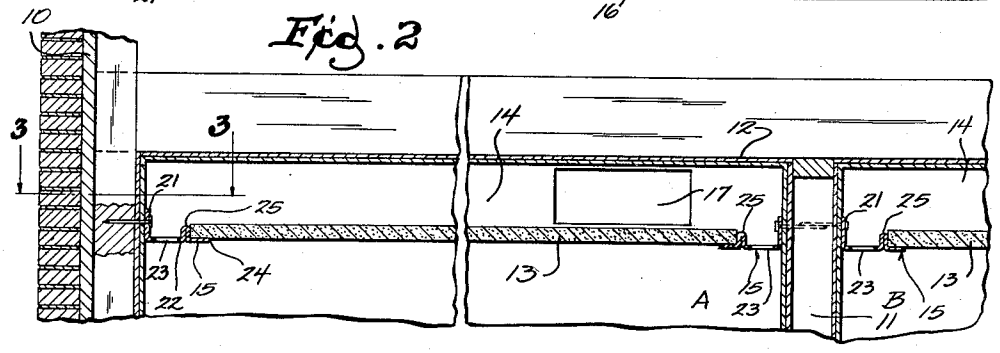

Fig. 4

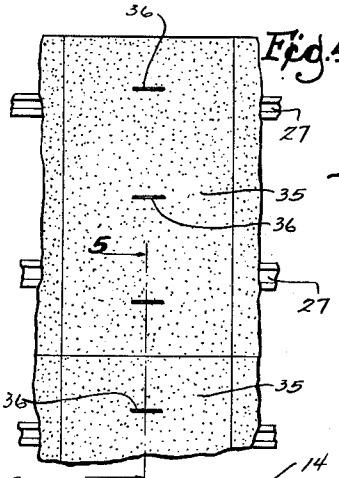

Fig. 6

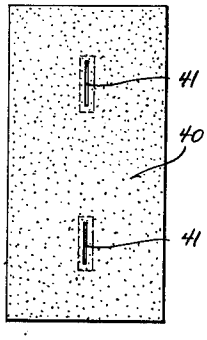

Fig. 8

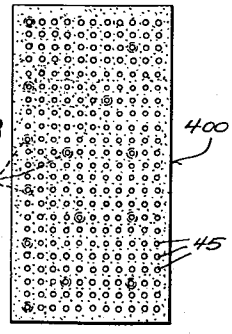

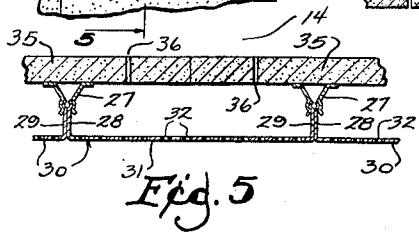

Fig. 5

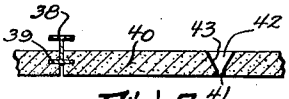

Fig. 7

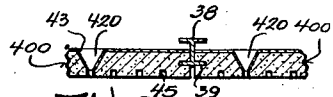

Fig. 9

INVENTOR

WALTER M. ERICSON

BY Wheeler, Wheeler & Wheeler

ATTORNEYS

United States Patent Office

2,781,557

Patented Feb. 19, 1957

2,781,557

ACOUSTICAL AND AIR DISTRIBUTING CEILING CONSTRUCTION

Walter M. Ericson, Wauwatosa, Wis.

Application November 15, 1951, Serial No. 256,574

12 Claims. (Cl. 20—4)

This invention relates to an acoustical and air distributing ceiling construction.

There are many well known types of sound absorbing ceilings. Numerous attempts to use apertures in such ceilings for the distribution of air in heating, ventilating, or cooling systems have failed, principally because of two factors. Attempts to make the air flow uniformly through all the provided apertures have met with failure and the ceilings have also been objectionable because of a tendency for the ceiling panels to become discolored around the apertures therein.

The present invention seeks to provide a ceiling construction which will be satisfactory from an acoustical standpoint in providing adequate sound deadening and which will nevertheless accomplish uniformity of air flow through the provided apertures from the plenum chamber thereabove. It is a further object to provide a ceiling which will remain clean for even longer periods than ceilings which do not incorporate my invention. A still further object is the provision of ceiling construction elements which will automatically achieve the described results in any ceiling in which they are used, without requiring any adjustment or any special design or any attention on the part of a heating or ventilating engineer.

All of these results are achieved by the several embodiments of the invention herein disclosed wherein the apertures provided for air flow through the ceiling from the plenum chamber have an aggregate area which does not exceed one percent of the total area of the ceiling. Particularly in those embodiments in which the air flow apertures are numerous and substantially uniform in distribution there will be a descending, and substantially uniformly distributed, blanket of air which will prevent rising currents of air from carrying soot or other dirt to the ceiling. There is a surprising amount of dust or soot carried by the circulating air itself. This may constitute a major source of ceiling discoloration, but discoloration is prevented in the present ceilings by the fact that I make the area immediately contiguous to the ceiling openings impervious even though the larger areas of the ceiling panels are desirably highly porous for acoustical purposes.

The accepted acoustical practice requires the aggregate area of the ceiling apertures to constitute about five percent of the total area of the ceiling. Regardless of the amount of air circulating, the air will form definite channels at some points and dead spots at others if the opening available for air flow is more than one percent. This has not previously been known. It would appear logical to suppose that if the air flow were great enough to build up an adequate head of pressure in the plenum chamber, flow would necessarily be uniform through all of the openings therefrom. I have now demonstrated that this is not the case. In practice, I have found it desirable to limit the aggregate total of air flow openings to only three-tenths of one percent of the whole ceiling area. If such total exceeds one percent, no degree of uniformity whatever is secured. At one percent or less, there is substantial uniformity of flow and at three-tenths of one percent the flow is substantially perfectly uniform.

The construction shown in Figs. 1 to 3 is not a preferred embodiment of my invention, but it gives a sufficiently close approximation so that it works out satisfactorily for average home installations.

In the drawings:

Fig. 1 is a diagrammatic household section of a home installation as viewed at the level of the plenum chambers above the several rooms.

Fig. 2 is a view taken in vertical section on an enlarged scale on the line 2—2 of Fig. 1.

Fig. 3 is an enlarged detail view taken on the line 3—3 of Fig. 2.

Fig. 4 is a fragmentary plan view of contiguous panels in a modified ceiling construction embodying my invention.

Fig. 5 is a view taken in section on the line 5—5 of Fig. 4.

Fig. 6 is an inverted plan view of a panel representing a further modified embodiment of my invention.

Fig. 7 is a detail view in vertical section through a ceiling incorporating the device of Fig. 6.

Fig. 8 is a view of a ceiling panel representing a further modified embodiment of my invention.

Fig. 9 is a fragmentary detail view in vertical section through a ceiling embodying the panel of Fig. 8.

The construction shown in Figs. 1, 2, and 3 shows the floor plan of a building having rooms A, B, C, and D enclosed by an outer wall 10 and partitions 11. Each room has a ceiling at 12 and a false ceiling comprising panels 13, the latter being supported from the walls and partitions by channel brackets 15 at a level somewhat spaced below the true ceiling 12 to provide plenum chambers 14. Air is led into each of the plenum chambers from circulator 16 through ducts 17, 18, 19, and 20 respectively.

Each of the brackets 15 comprises a flange 21 secured to the partition or wall. Projecting toward the center of the room from the supporting flange is a horizontal flange 22 which has apertures 23 at close intervals throughout its length. The panels 13 rest upon the free margins 24 of the horizontal flange and may be centered thereon by a rib 25 formed in such flange, as clearly shown in Figs. 2 and 3.

The width and number of the apertures are so determined that regardless of whether the channel bracket is used in a large room or small one, within the room sizes commonly employed in home construction, the aggregate area of the apertures 23 will not exceed more than approximately one percent of the total ceiling area of the room. In a larger room there would be a greater length of bracket required for the support of the ceiling panels, while in a small room the reduced perimeter will reduce the number of openings. While the ratio will not remain constant, I have found no lower limit below which the device will not function. Accordingly, if the aggregate area of the slots is designed to constitute no more than one percent of the total area of the smallest ceiling which will ordinarily be constructed in this form, the larger ceilings will take care of themselves.

For control within a narrow range of desired proportions, there would be needed at most a very few different styles of brackets. A bracket with slots ½″ x 1″ on five inch centers would take care of rooms 10′ x 10′ and 10′ x 14′ satisfactorily, whereas a room 15′ x 30′ might desirably have the slots more closely spaced.

Regardless of whether the flow of air from the circulator 16 to the several plenum chambers 14 is a gravity flow or is fan induced, and no matter how great its volume, the flow through each of the slots will be sub-

stantially identical with the flow through each other slot 23. In this embodiment, it will be observed that the flow is concentrated along the walls and partitions to produce descending curtains of air, as distinguished from a uniformly distributed blanket of downwardly moving air such as is achieved where the other embodiments of my invention are used.

Figs. 4 and 5 show a well known type of acoustical ceiling using resilient mounting brackets 27 to engage and support the beaded marginal flanges 28, 29 of contiguous pans 30 which have their bottoms 31 provided with a multiplicity of apertures 32. As aforesaid, for acoustical purposes, the aggregate area of the openings at 32 should constitute at least five percent of the total ceiling area. Sound penetrating the apertures 32 is absorbed in the cushions 35 supported on the resilient mounting members 27.

The mounting members 27 will, of course, space both the pans and the cushions below the true ceiling to provide a plenum chamber 14 as above described.

All that is necessary for the purposes of the present invention is to slot the acoustical pads 35 to provide openings at 36 having the required aggregate area of one percent or less than one percent of the total ceiling area for discharging from the plenum chamber 14 the circulating air fed thereto. Desirably each of the openings 36 between pads discharges onto the upper surface of one of the pans between the supporting brackets 27 and the interior of the pan constitutes a secondary plenum chamber. However, the aggregate area of the holes 30 is too great to effect uniform circulation and reliance for circulation control is therefore placed upon the openings 36 in the pads above the pans. Provided there are control openings of not to exceed one percent area in the path of air flow, uniformity is not destroyed by the fact that the air must also flow through additional openings.

In the construction shown in Figs. 6 and 7 another conventional supporting joist is shown at 38 which has the general cross section of an I beam, the lower flanges 39 of which are received in kerfs in the ends of the ceiling panels 40. The panels may be with or without acoustical value but are desirably made of relatively porous pressed fiber. They may be completely devoid of openings except for the slots which are cut at 41 to permit air flow downwardly through each panel from the plenum chamber thereabove. These slots desirably have upwardly flaring surfaces at 42 which are coated, as shown at 43 to make them impervious or substantially impervious to air. Any oil base or plastic base paint or bituminous coating may be used and, in fact, any coating is suitable which is impervious to air.

I have found that where a porous panel has a slot, and the margin of it is not thus protected, some of the air will tend to pass outwardly from the slot through the material of the panel to issue from the face of the panel near the slot. The dust and soot carried with such air will ultimately discolor the exposed face of a panel; but such penetration and discoloration can be wholly prevented by painting the edges of the panel for a slight distance outwardly from the slot, and this is best done by flaring the walls of the slot and applying the paint to the flaring walls as shown.

It will be observed that this protection is needed only where the exposed surface constitutes the surface of a porous panel. It was not needed in the construction of Figs. 1 to 3, nor in the construction of Fig. 5, where the only exposed surface around the slot was metallic and hence impermeable to air.

The construction of Figs. 8 and 9 is identical with that of Figs. 6 and 7 except that the panels 400 here employed are acoustical panels having sound absorbing pockets at 45, the aggregate area of which should be more than five percent of the total ceiling area. For the purposes of the present invention, the upper surface of the panel is counterbored at 420 in registry with selected pockets 45, and the flaring wall of the counterbore is painted at 43 with some material impermeable to air to protect the panel from discoloration as above described. The total number of pockets which are thus converted to through openings should have an aggregate area not to exceed one percent of the total area of the ceiling so that the air descending through the panels from the plenum chamber 14 will flow in equal volume through all the openings.

Where the constructions of Figs. 4 to 9 are used, it has been demonstrated that the entire room beneath such a ceiling will be filled with a column of air descending at uniform velocity and without any perceptible currents or dead spots. The uniform downward movement of all of the air in the rooms tends to prevent any soil from ever reaching the ceiling and the ceiling of such a room will stay clean much longer than is the case in other acoustical ceilings, whether or not such ceilings are apertured for ventilation.

Needless to say, the advantages of the present invention cannot be achieved if the entire ventilation area is concentrated in a single opening or a few large openings. In practice, the pockets 45 of Figs. 8 and 9, and the openings therethrough have been about one eighth of an inch in diameter, with the counterbore in the upper surface of the panels 400 having a maximum diameter of five eights of an inch. The slots 41 of Figs. 6 and 7 have had a clear opening of one eighth of an inch wide by two inches long. The panels in each case are conventionally twelve inches by twenty-four inches for this type of work.

However, while the openings desirably used are small, and fairly close together (principally from an appearance standpoint), there is nothing critical about the size of the opening provided the several openings are fairly uniformly distributed. I have found that even where the openings are two feet apart or more, the air column, as measured only a few inches below the false ceiling, shows no perceptible channeling and is sufficiently uniform in its distribution and movement to preclude any soiling of the ceiling.

I claim:

1. In an air circulation system, a plenum chamber having a room ceiling at its bottom provided with discontinuous apertures opening downwardly through said ceiling from said plenum chamber said apertures having an aggregate area adequate for normal ventilating requirements and not exceeding one percent of the ceiling area and said apertures being in a substantially uniform pattern of distribution throughout the ceiling area and of such size and spacing from each other that flow from the several apertures laps and merges closely below the ceiling as a descending blanket of air.

2. The device of claim 1 in which the ceiling is largely composed of prefabricated small tile-like panels of porous material, each individual panel having several small openings of an aggregate area less than one percent of the panel area.

3. The device of claim 2 in which the margins of the porous panels contiguous to said panel openings flare upwardly, being wider at the upper panel surfaces than at the lower panel surfaces, and a coating impervious to air covering said flaring margins, the porous panel surface being exposed throughout its lower face.

4. The device of claim 3 in which the panel openings comprise elongated slots.

5. The device of claim 3 in which the panel openings are circular in cross-section.

6. In an acoustical and ventilating ceiling, the combination with an air supply duct, of a continuous ceiling of acoustical panels having their upper faces exposed to air supplied by said duct and each having several fabricated openings therethrough from the upper face to the lower face of which the total aggregate area is of the approximate order of three-tenths of one percent and is no greater than one percent of the total area of

the lower face of the panel and each opening is sufficiently large to permit the free passage of air therethrough, the said fabricated openings being sufficiently close together so that in the said ventilating ceiling the air flow through the several fabricated openings of the respective panels will merge shortly below the face of the ceiling as a descending blanket of air.

7. The combination of claim 6 in which the openings are elongated slots with upwardly divergent side walls and, having greater cross-section at the upper face of the panel than at the lower face thereof.

8. The device of claim 7 in further combination with an impervious coating attached to the panel surfaces defining the said divergent side walls, adjacent parts of the panel being pervious and said coating being adapted to constrain air movement to flow through the respective openings rather than adjacent pervious portions of the panel.

9. An air distributing ceiling comprising the combination with room walls and a true ceiling, of a false ceiling spaced below the true ceiling and providing, in conjunction with the true ceiling and said walls, a plenum chamber having connections for supplying circulating air thereto, the false ceiling being provided with flow constricting means having a multiplicity of apertures of an aggregate area adequate in number and size to supply normal ventilating requirements but less than one percent of its total area, the false ceiling comprising a plurality of separate panels, substantially each of which has several apertures aggregating an area less than one percent of the total panel area and symmetrically distributed on the respective panels whereby a ceiling made of such panels, regardless of its total area, has uniformly distributed apertures aggregating less than one percent of such total area, whereby air flow from the plenum chamber through the openings in the false ceiling will blend shortly below the ceiling and descend as a column at substantially uniform velocity and distribution to tend to preclude dust in the room from reaching the false ceiling and soiling it.

10. The device of claim 9 in which the apertures comprise elongated slots and the panels have upwardly flaring surfaces defining such apertures.

11. The device of claim 9 in which said panels have lower surfaces provided with blind pockets greatly exceeding the apertures in number and with certain of which said apertures communicate.

12. As an article of manufacture, a ceiling panel having upper and lower surfaces, said panel having substantially uniformly distributed pockets at its lower surface and having openings from a selected few of such pockets through the panel to the upper surface thereof, the aggregate area of such openings being no greater than one percent of the total area of the lower face of the panel, said panel including surfaces flaring upwardly about the respective openings from the pockets with which said openings communicate, the panel being porous and having its said flaring surfaces coated with a substance impervious to air.

References Cited in the file of this patent

UNITED STATES PATENTS

1,937,889	Howard	Dec. 5, 1933
2,002,510	Rosenblatt	May 28, 1935
2,172,771	Norris	Sept. 12, 1939
2,242,834	Price	May 20, 1941
2,251,660	Chipley	Aug. 5, 1941
2,271,871	Newport et al.	Feb. 3, 1942
2,276,788	Norris	Mar. 17, 1942
2,291,220	Germonprez	July 28, 1942
2,580,835	Raider	Jan. 1, 1952
2,587,884	Palmer	Mar. 4, 1952
2,659,807	Wakefield	Nov. 17, 1953
2,718,383	Frenger	Sept. 20, 1955

OTHER REFERENCES

Heating and Ventilating, vol. 48, #5, May 1951, page 24.