(19) Europäisches Patentamt
European Patent Office
Office européen des brevets

(11) EP 2 368 814 A1

(12) EUROPEAN PATENT APPLICATION

(43) Date of publication:
28.09.2011 Bulletin 2011/39

(51) Int Cl.:
B65F 1/14 *(2006.01)*

(21) Application number: **11002297.7**

(22) Date of filing: **21.03.2011**

(84) Designated Contracting States:
AL AT BE BG CH CY CZ DE DK EE ES FI FR GB GR HR HU IE IS IT LI LT LU LV MC MK MT NL NO PL PT RO RS SE SI SK SM TR
Designated Extension States:
BA ME

(30) Priority: **22.03.2010 GB 1004729**
22.06.2010 GB 1010451

(71) Applicant: **Recolight Limited**
Croydon
CR0 0XZ (GB)

(72) Inventors:
- **Bristow, Gemma**
  Croydon
  CR0 0XZ (GB)
- **The other inventor has agreed to waive his entitlement to designation.**

(74) Representative: **Evans, Claire et al**
Fry Heath & Spence LLP
The Gables
Massetts Road
Horley
Surrey RH6 7DQ (GB)

(54) A container for receiving compact fluorescent lamps

(57) A container (1) for receiving compact fluorescent lamps (CFLs), the container (1) comprising an aperture (5) for receiving CFLs and means (6a,6b,6c) for breaking the fall of a CFL as it drops into the container (1).

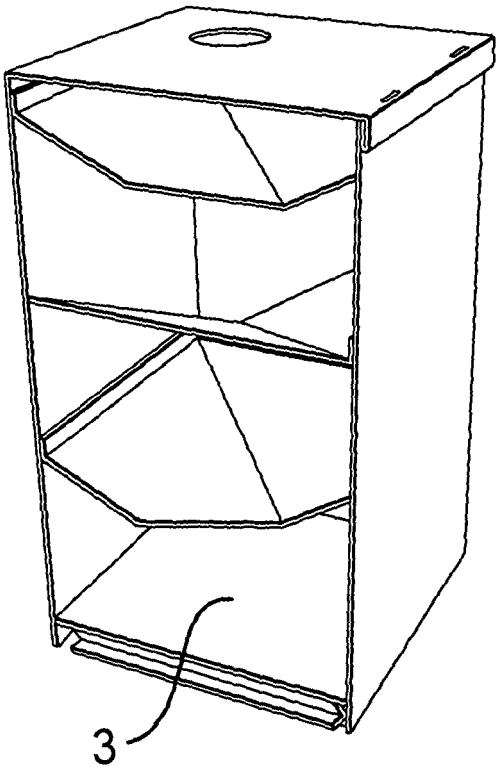

Fig. 2

EP 2 368 814 A1

Description

[0001] The invention relates to a container for receiving breakable objects, particularly light bulbs, more particularly energy saving light bulbs such as compact fluorescent lamps (CFLs).

[0002] The mercury content in an average CFL is about 5 milligrams. Mercury is a very hazardous material, and because of this CFLs need to be recycled rather than sent to landfill. Most Local Authority Household Waste Recycling Centres (HWRCs) have collection containers available, but these are just dump-bins, which often result in high mercury release because CFLs are fragile and so easily damaged in these bins. Moreover, the rate of recycling of CFLs through HWRCs is low, as many people are unaware of the hazardous nature of CFLs and dispose of them in their normal household waste collection. This is much easier for the householder, but creates long term problems in landfill sites.

[0003] The Waste Electrical and Electronic Equipment (WEEE) Directive is an attempt to transfer responsibility for recycling CFLs to manufacturers and importers of CFLs. The WEEE Directive anticipates that retailers will operate an in-store recycling service. This should lead to higher recycling rates as recycling in-store would be easier for the householder, and the retailer could publicise the hazardous nature of CFLs. However, retailers are reluctant to recycle CFLs in-store because they are concerned about the risk of mercury contamination, especially in shops where food is sold. This means that nearly all stores which sell CFLs do not currently offer an in-store recycling service.

[0004] It is an object of the invention to provide a container for receiving breakable objects such as CFLs which helps to prevent breakage of the CFLs as they drop into the container.

[0005] Accordingly, the invention provides a container for receiving CFLs, the container comprising means for breaking the fall of a CFL as it drops into the container.

[0006] The fall-breaking means may comprise one or more shelves, each of which extends across part of the interior of the container.

[0007] At least one of the shelves may slope downwards towards the bottom of the container.

[0008] The container may comprise a plurality of sloping shelves, and the downward slope of each of the shelves may be such that it will guide a CFL in a direction which differs from the direction in which one or more adjacent shelves will guide a CFL.

[0009] The downward slope of each of the shelves may be such that it will guide a CFL in the opposite direction from the direction in which one or more adjacent shelves will guide a CFL.

[0010] The gradient of the slope of the shelf nearest the bottom of the container may be less than the gradient of the slope of the other shelf or shelves.

[0011] The base of the container may slope downwards towards the bottom of the container.

[0012] The container may comprise means for closing the aperture.

[0013] The container may comprise a mercury detector.

[0014] The means for closing the aperture may be activated in the event that mercury is detected.

[0015] The container may be a flat pack container.

[0016] The container may be made from a non-absorbent material.

[0017] The fall-breaking means may be removable from the container.

[0018] The fall-breaking means may form a separate unit which may be positioned inside a bag within the container.

[0019] The invention will now be illustrated by way of example with reference to the following drawings of which:

Figure 1 shows a perspective view from above of a first embodiment of a container according to the invention;

Figure 2 shows an interior perspective view from above of the container of Figure 1;

Figure 3 shows an interior perspective view from below of the container of Figure 1;

Figure 4 shows a cross-sectional side view of the container of Figure 1;

Figure 5 shows a perspective view of one of the shelves of the container of Figure 1;

Figure 6 shows the template used for constructing the exterior of the container of Figure 1; and

Figure 7 shows the template used for constructing one of the shelves of the container of Figure 1.

[0020] The container 1 shown in Figures 1 to 5 is cuboid in shape, and comprises a lid 2, a base 3 and four sides 4a, 4b, 4c, 4d. The lid 2 includes an aperture 5 for receiving CFLs. Inside the container are three shelves 6a, 6b, 6c, positioned one above the other, each of which extends across part of the interior of the container 1.

[0021] The container 1 is a flat pack container, and may be assembled on site by the retailer. Figures 6 and 7 show the templates from which the container 1 can be constructed, Figure 6 showing the template for the exterior of the container 1 (i.e. the lid 2, base 3 and four sides 4a, 4b, 4c, 4d) and Figure 7 showing the template for one of the shelves 6a, 6b, 6c.

[0022] In the template for the exterior of the container 1, each of the free edges of the base 3 comprises a flap 7. Each lowermost free edge of sides 4b, 4c, 4d also comprises a flap 8. The flaps 8 on sides 4b, 4c, 4d are provided with tabs 9 and the flaps 7 on the base 3 are

provided with corresponding slots 10 to allow the sides 4b, 4c, 4d to be releasably secured to the base 3 once the exterior of the container has been assembled. Each of the free edges of the lid 2 comprises a flap 11. Tabs 12 and slots 13 are provided on one of the flaps 11 to allow the flaps 11 to be releasably held together to form sides to the lid 2.

[0023] A horizontal strip 14a is marked across the top of sides 4a and 4b of the template, adjacent to the lid 2, to show where the top shelf 6a should be bonded to the container 1. A second horizontal strip 14b is marked across sides 4c and 4d of the template, just above the middle of sides 4c and 4d, to show where the middle shelf 6b should be bonded to the container 1. A third horizontal strip 14c is marked across sides 4a and 4b of the template, just below the middle of sides 4a and 4b, to show where the bottom shelf 6c should be bonded to the container 1.

[0024] The base 3 comprises a rectangular section 15 adjacent to the section 16 which, in use, forms the bottom of the container 1.

[0025] The template for each shelf 6a, 6b, 6c comprises two kite-shaped sections 17, joined to one another along one of their long edges 18. A rectangular flange 19 is attached to each of the other long edges 20 of the two sections 17. The top and middle shelves 6a, 6b each have an angle a=49°. The bottom shelf 6c has an angle a=47°.

[0026] To assemble the container 1, the two kite-shaped sections 17 of each shelf template are folded towards one another along the line 18 where the two sections 17 join one another. Each shelf template is then attached to the template for the exterior of the container by bonding the two flanges 19 to the relevant horizontal strip 14a, 14b, 14c marked on sides 4b, 4c, 4d of the template. The rectangular section 15 and the bottom section 16 of the base 3 are folded away from one another along the line 20 where the rectangular section 15 joins the bottom section 16. The template is then folded into a cuboid shape, and the flaps 7, 8, 11, tabs 9, 12 and slots 10, 13 are used to connect together the lid 2, base 3 and four sides 4a, 4b, 4c, 4d of the container 1.

[0027] Because of the kite-shape of the two sections 17 of each shelf 6a, 6b, 6c and the fact that they have been folded towards each other, each shelf 6a, 6b, 6c slopes downward towards the bottom of the container 1. Moreover, because the top and bottom shelves 6a, 6c have been bonded to sides 4a and 4b, whereas the middle shelf 6b has been bonded to sides 4c and 4d, the shelves 6a, 6b, 6c slope in opposing directions. This means that, on being dropped into the container 1, a CFL will be guided down to the bottom of the container 1 along a zig-zag path, with only short drops between adjacent shelves 6a, 6b, 6c. This leads to the speed of descent of the CFL being reduced, which in turn reduces the likelihood of breakage. The gradient of the slope of the bottom shelf 6c is less than that of the other two shelves 6a, 6b, because of the smaller size of angle a. This means that the speed of descent of the CFL will be further reduced when the CFL travels along the bottom shelf 6c, thus further reducing the likelihood of breakage.

[0028] The bottom section 16 of the base 3 also slopes downward because of the fold 20 between it and the adjacent rectangular section 15. At least initially, this will guide the CFLs in the bottom of the container away from area where the CFLs drop down onto the base 3 from the third shelf 6c, thereby reducing the possibility of breakage.

[0029] Once the CFLs have reached the bottom of the container 1, they will stack on top of the CFLs which have already been placed in the container 1. The container 1 may continue to be used until it has been filled up to the top.

[0030] Once the container 1 has been filled, it can be sent to the recyclers. The recycler can then empty the container 1 by laying it on its side and slowly opening the base 3 and/or lid 2. Once the container 1 has been emptied, it may be folded flat with the shelves 6a, 6b, 6c still in place. The container 1 may then be returned to the retailer in flat-pack form, ready for re-use.

[0031] The container 1 may be made of any suitable material. For example, it may be made from corrugated cardboard coated on one side with a non-absorbent barrier or from polypropylene. The polypropylene may be transparent.

[0032] In the first embodiment of the invention described above, the three shelves are attached directly to the interior of the container. In a second embodiment of the invention (not shown), the shelves are not attached to the container. Instead, they form a separate unit, which can be placed into, and removed from, the container.

[0033] Before the shelf unit is placed in the container, it is placed inside a plastic rubbish bag. When the container is ready to be emptied, the shelf unit is removed from the bag, so causing the CFLs which have been placed in the container to fall down into the bag. The filled bag may then be sent to the recyclers, leaving the shelf unit ready to be placed in another bag and positioned in the container, ready for re-use.

[0034] This second embodiment of the invention allows re-use of the container straight away, without it first being sent to the recyclers.

[0035] In a third embodiment of the invention (not shown), the container comprises a mercury detector to detect mercury in the event of breakage of a CFL. The lid comprises a self closing flap to close the aperture and so prevent leakage of mercury vapour in the event of breakage of a CFL. This flap is automatically activated when mercury is detected by the mercury detector. Active carbon sachets may be placed inside the container to absorb any leaked mercury.

[0036] The above embodiments have been described to illustrate the invention, and are not intended to be limiting. The skilled person will be readily able to devise alternative embodiments without departing from the scope of the claims.

Claims

1. A container for receiving CFLs, the container comprising an aperture for receiving CFLs and means for breaking the fall of a CFL as it drops into the container.

2. A container according to claim 1, wherein the fall-breaking means comprises one or more shelves, each of which extends across part of the interior of the container.

3. A container according to claim 2, wherein at least one of the shelves slopes downward towards the bottom of the container.

4. A container according to claim 3, wherein the container comprises a plurality of sloping shelves, and the downward slope of each of the shelves is such that it will guide a CFL in a direction which differs from the direction in which one or more adjacent shelves will guide a CFL.

5. A container according to claim 4, wherein the downward slope of each of the shelves is such that it will guide a CFL in the opposite direction from the direction in which one or more adjacent shelves will guide a CFL.

6. A container according to any of claims 3 to 5, wherein the gradient of the slope of the shelf nearest the bottom of the container is less than the gradient of the slope of the other shelf or shelves.

7. A container according to any preceding claim, wherein the base of the container slopes downwards towards the bottom of the container.

8. A container according to any preceding claim, wherein the container comprises means for closing the aperture.

9. A container according to claim 8, wherein the container comprises a mercury detector.

10. A container according to claim 9, wherein the means for closing the aperture is activated in the event that mercury is detected.

11. A container according to any preceding claim, wherein the container is a flat-pack container.

12. A container according to any preceding claim, wherein the container is made from a non-absorbent material.

13. A container according to any preceding claim, wherein the fall-breaking means are removable from the container.

14. A container according to claim 13, wherein the fall-breaking means form a separate unit which may be positioned inside a bag within the container.

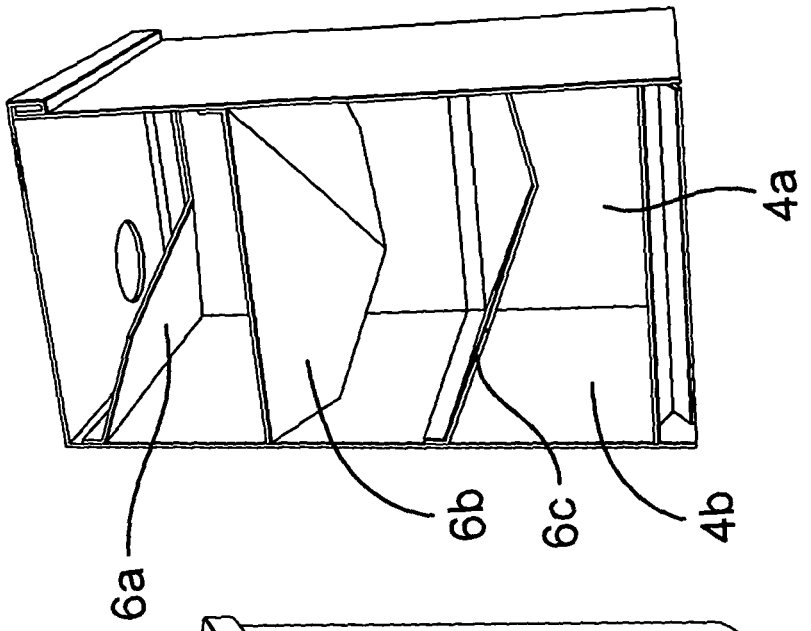

Fig. 3

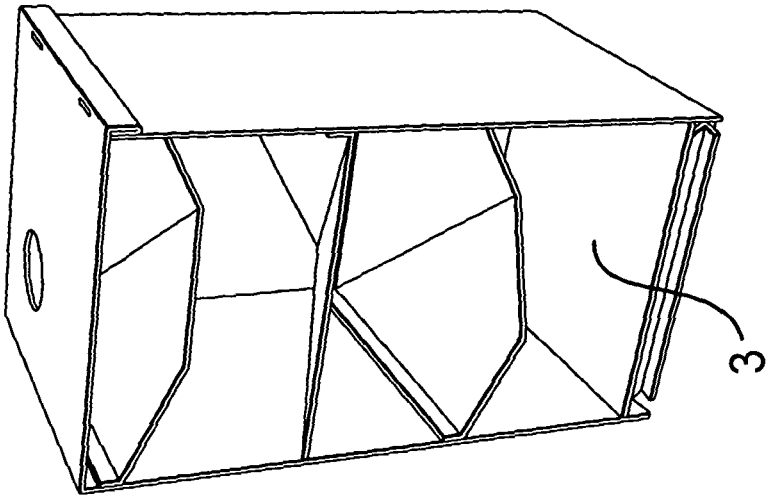

Fig. 2

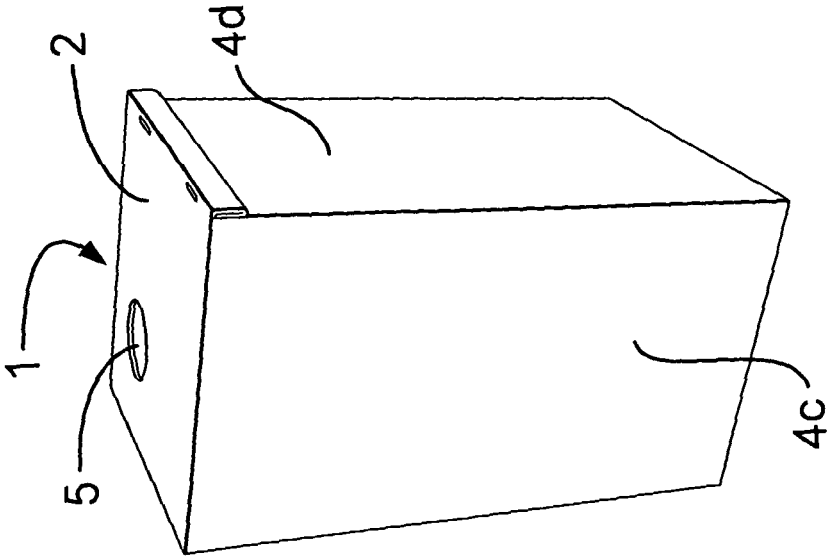

Fig. 1

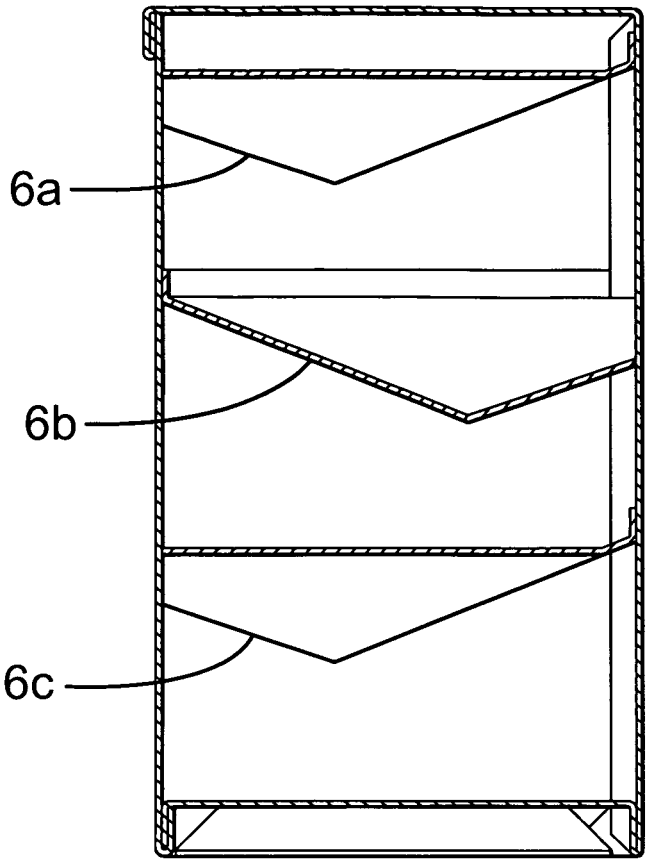

Fig. 4

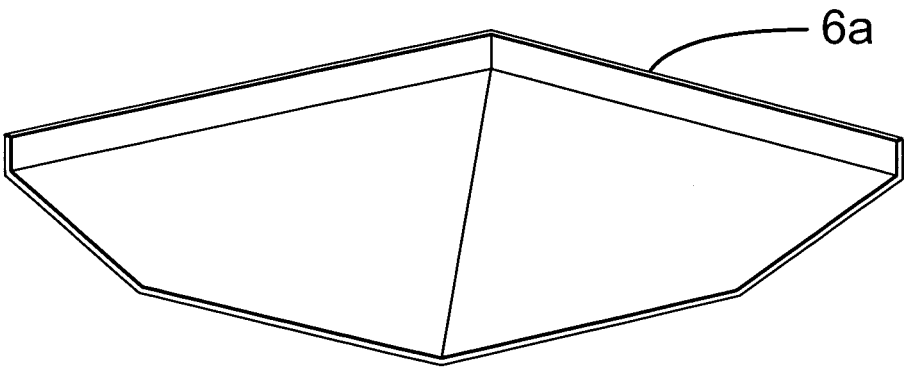

Fig. 5

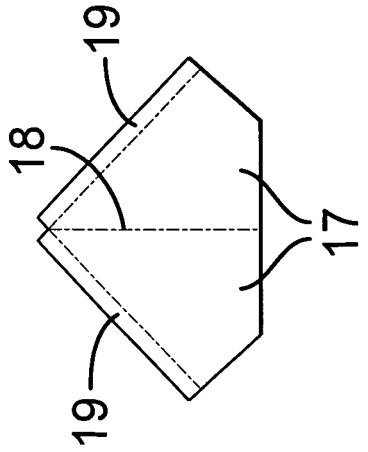
19
18
17
19

Fig. 7

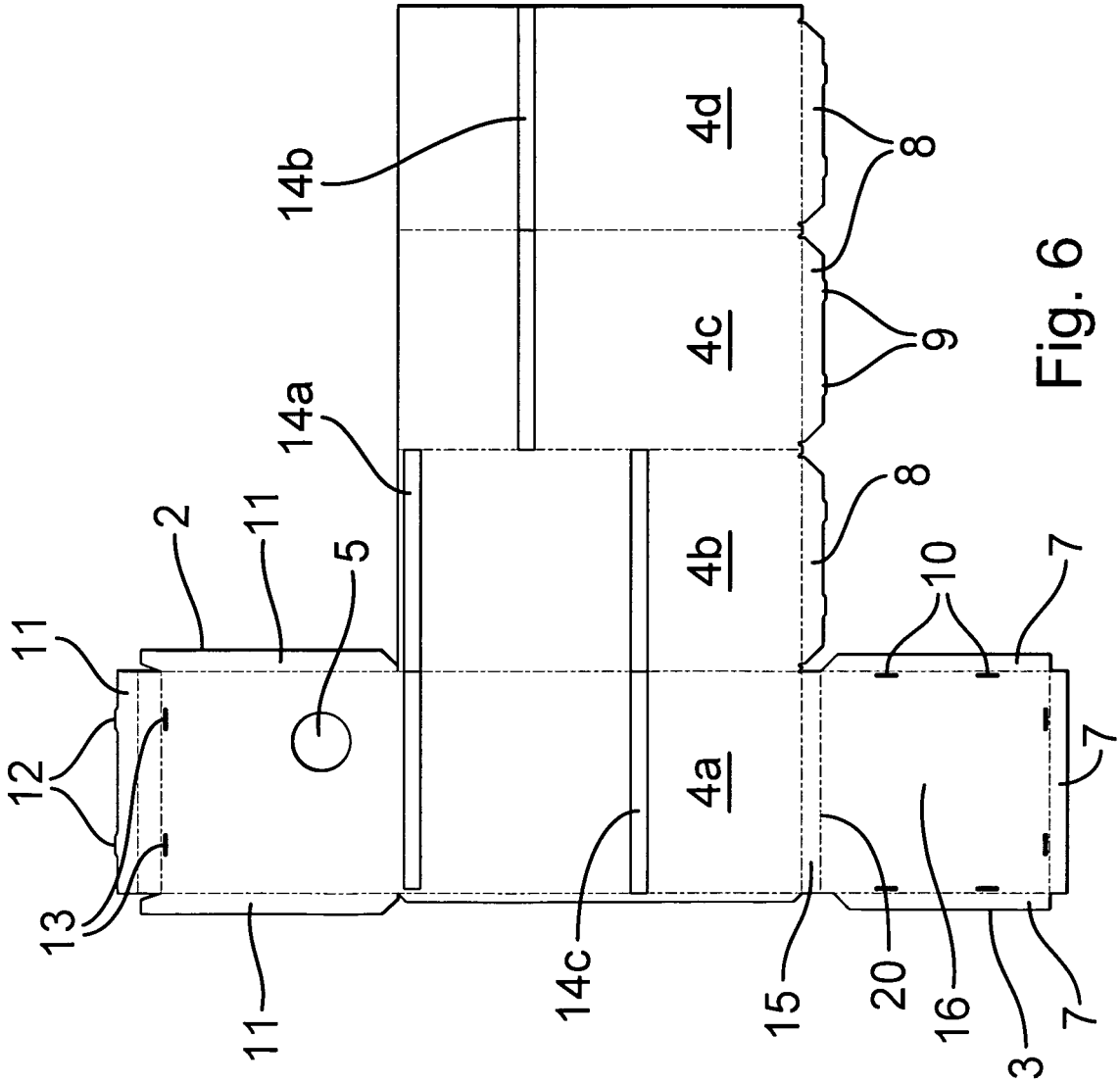
14b
4d
8
4c
9
14a
8
2
11
5
4b
10
7
11
12
13
4a
7
11
14c
15
20
16
3
7

Fig. 6

Europäisches Patentamt
European Patent Office
Office européen des brevets

EUROPEAN SEARCH REPORT

Application Number
EP 11 00 2297

DOCUMENTS CONSIDERED TO BE RELEVANT

Category	Citation of document with indication, where appropriate, of relevant passages	Relevant to claim	CLASSIFICATION OF THE APPLICATION (IPC)
X	DE 81 36 127 U1 (C.F. MAIER GMBH & CO.) 18 March 1982 (1982-03-18)	1-5,7,12	INV. B65F1/14
A	* page 5, line 28 - page 8, line 27 * * figures 1,2 *	6,8,13, 14	

X	EP 1 053 957 A1 (MOLOK OY [FI]) 22 November 2000 (2000-11-22)	1-5, 12-14	
A	* paragraph [0010] - paragraph [0019] * * figures 1-5 *	6-8	

X	DE 85 31 211 U1 (F. HEYM) 2 January 1986 (1986-01-02)	1-3,12	
A	* the whole document *	4-8,13, 14	

X	EP 1 798 165 A1 (SPHERAE S.R.L.) 20 June 2007 (2007-06-20)	1	
A	* paragraph [0016] - paragraph [0022] * * figures 1-4 *	8,11-14	

A	US 2007/225540 A1 (L. KELLY) 27 September 2007 (2007-09-27) * paragraph [0035] - paragraph [0048] * * figures 1-8 *	1-14	TECHNICAL FIELDS SEARCHED (IPC) B65F

The present search report has been drawn up for all claims

Place of search	Date of completion of the search	Examiner
The Hague	28 June 2011	Smolders, Rob

CATEGORY OF CITED DOCUMENTS

X : particularly relevant if taken alone
Y : particularly relevant if combined with another document of the same category
A : technological background
O : non-written disclosure
P : intermediate document

T : theory or principle underlying the invention
E : earlier patent document, but published on, or after the filing date
D : document cited in the application
L : document cited for other reasons

& : member of the same patent family, corresponding document

EPO FORM 1503 03.82 (P04C01)

ANNEX TO THE EUROPEAN SEARCH REPORT ON EUROPEAN PATENT APPLICATION NO. EP 11 00 2297

This annex lists the patent family members relating to the patent documents cited in the above-mentioned European search report. The members are as contained in the European Patent Office EDP file on
The European Patent Office is in no way liable for these particulars which are merely given for the purpose of information.

28-06-2011

Patent document cited in search report	Publication date	Patent family member(s)	Publication date
DE 8136127 U1	18-03-1982	NONE	
EP 1053957 A1	22-11-2000	FI 4368 U1	28-03-2000
DE 8531211 U1	02-01-1986	NONE	
EP 1798165 A1	20-06-2007	NONE	
US 2007225540 A1	27-09-2007	NONE	

EPO FORM P0459

For more details about this annex : see Official Journal of the European Patent Office, No. 12/82