Oct. 26, 1954

S. J. GIBSON

TOOL-SLIDE ACTUATING MECHANISM
FOR LATHES OR OTHER MACHINES

2,692,509

Filed April 13, 1951

2 Sheets-Sheet 1

Fig. 1.

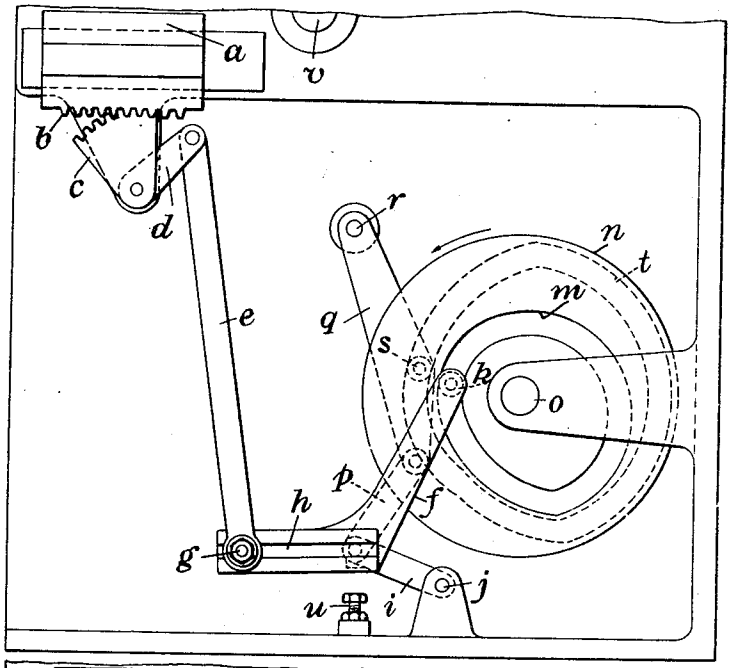

Fig. 2.

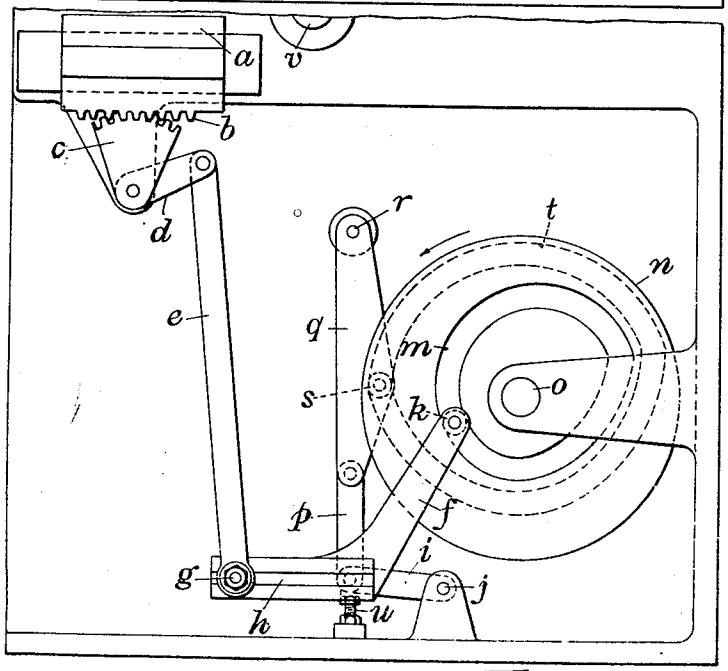

Inventor
S. J. Gibson
By Glenn K. Downing & Seebold
Attys.

Oct. 26, 1954

S. J. GIBSON

TOOL-SLIDE ACTUATING MECHANISM FOR LATHES OR OTHER MACHINES

2,692,509

Filed April 13, 1951

2 Sheets-Sheet 2

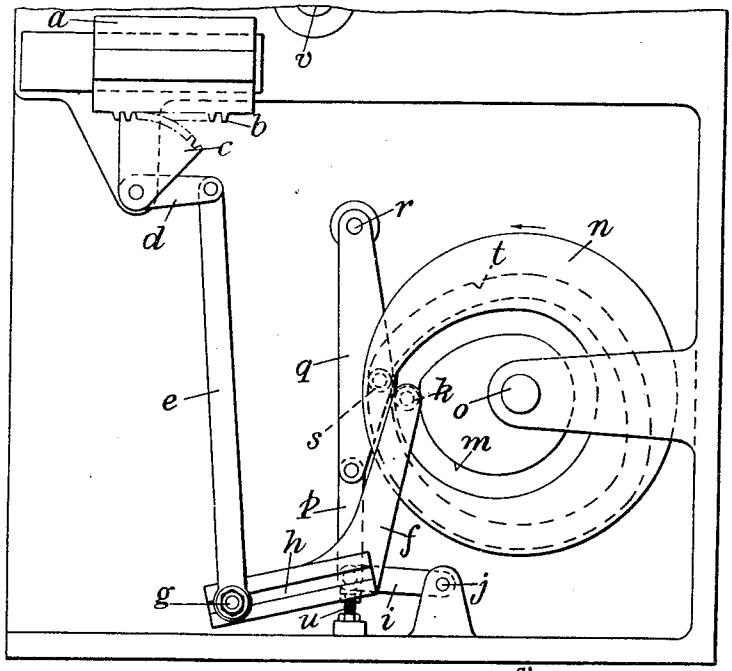

Fig. 3.

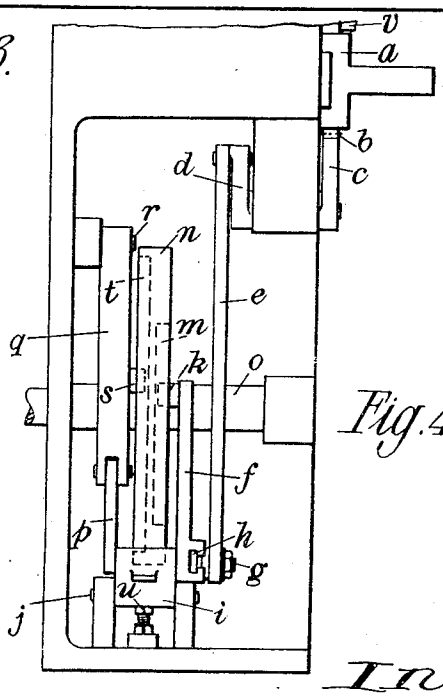

Fig. 4.

Inventor

S. J. Gibson

By Glascock Downing Seebold

Attys.

Patented Oct. 26, 1954

2,692,509

UNITED STATES PATENT OFFICE

2,692,509

TOOL-SLIDE ACTUATING MECHANISM FOR LATHES OR OTHER MACHINES

Stanley John Gibson, Coventry, England, assignor to A. C. Wickman Limited, Coventry, England

Application April 13, 1951, Serial No. 220,905

Claims priority, application Great Britain April 28, 1950

2 Claims. (Cl. 74—53)

1

This invention relates to a tool-slide actuating mechanism, for use on a multi-spindle automatic lathe or other machine, of the kind adapted to effect a rapid movement of the tool-slide from a rest position to the work piece, a relatively slow feed movement while the tool is acting on the work piece, and a rapid return movement to the initial position.

The invention has for its object to provide a mechanism of the above kind in a simple and convenient form.

The invention comprises the combination of a slide-actuating rack, a pinion or quadrant in engagement with the rack, a pivoted arm, a lever pivoted on the arm, adjustable means interconnecting the lever and the pinion or quadrant, a toggle mechanism for actuating the arm, and cams for actuating the toggle mechanism and the secondary lever.

In the accompanying drawings:

Figure 1 is a side elevation of a mechanism embodying the invention.

Figures 2 and 3 are similar views to Figure 1 showing two other working positions of the mechanism.

Figure 4 is an end elevation of the mechanism.

Referring to the drawings, a tool-slide *a* has formed on or connected to it a rack *b*, and with the latter is engaged a pinion or quadrant *c*. On the latter is formed or secured an arm *d* to the outer end of which is pivotally attached a link *e*, and the other end of the link is adjustably connected to a lever *f* of bell crank or other convenient form. The connection between the link and lever is effected by a pivot pin *g* which is securable in any desired position along a slot *h* in one arm of the lever, and is such that the amount of angular movement to be imparted to the quadrant *c* and thence the slide *a* can be varied as desired.

At the elbow of the lever *f* is pivotally mounted an arm *i* which at one end is pivotally connected to a fixed fulcrum *j*. The other arm of the lever is provided with a roller *k* which engages an actuating cam *m* formed in one side of a disc *n* on a driving shaft *o*.

To the pivoted arm *i* is connected one end of one of a pair of toggle links *p*, *q*, the opposite end of the other link being pivotally attached to another fixed fulcrum *r*. On the link q is mounted a roller *s* which is in engagement with a cam *t* on the opposite side of the disc *n*.

The arrangement is such that (starting from the rest position of the tool-slide as shown in Figure 1), the toggle-actuating cam *t* first straightens the toggle links into alignment with each other and moves the pivoted arm *i* into contact with a fixed stop *u*, and in so doing rapidly advances the tool slide *a* to a position adjacent

2

to the work piece which may be carried by a rotary spindle *v*. Subsequently the cam *m* rocks the lever *f* relatively to the primary lever *i*, and so imparts feed movement to the tool-slide as shown in Figure 3. Later the cams effect rapid return of the tool-slide to the initial position shown in Figure 1.

When it is required to actuate simultaneously a second tool-slide, mounted in a different position on the machine, the additional tool-slide is provided with a rack and pinion or quadrant similar to that of the first tool-slide, and the quadrant is connected by another link as *e* to the lever *f*.

By this invention a mechanism for actuating one or a pair of tool-slides is provided in a simple and convenient form, and the load imposed on the cams while the tool is in action is reduced to a minimum.

Having thus described my invention what I claim as new and desire to secure by Letters Patent is:

1. A tool-slide actuating mechanism comprising in combination with the tool slide, a rack on said tool slide, an angularly movable toothed member engaging said rack, a first arm pivoted at one end to a fixed anchorage, a two-armed lever pivoted at the junction of its arms on said first arm, adjustable means interconnecting one end of said two-armed lever and said toothed member, a toggle mechanism connected at one end to said first arm and provided at its opposite end with a fixed anchorage, a cam arranged to act on said toggle mechanism for imparting rapid movement to said tool slide, and a second cam arranged to act on the end of said two-armed lever remote from said adjustable means for imparting relatively slow feed movement to said tool slide.

2. A tool-slide actuating mechanism as claimed in claim 1, in which the adjustable means interconnecting one end of the two-armed lever and the toothed member comprise another arm secured to said toothed member, and a link connected at one end to the last mentioned arm and adjustably connected at its opposite end to the corresponding end of said two-armed lever.

References Cited in the file of this patent

UNITED STATES PATENTS

Number	Name	Date
356,619	Chase	Jan. 25, 1887
1,118,210	Mills	Nov. 24, 1914
2,007,564	Dixon	July 9, 1935
2,369,039	Gocht	Feb. 6, 1945

FOREIGN PATENTS

Number	Country	Date
44	Great Britain	Jan. 7, 1864