Nov. 27, 1951 P. H. THEARLE 2,576,425

ADJUSTABLE FREIGHT SECURING MEANS

Filed Aug. 20, 1949 2 SHEETS—SHEET 1

Fig. 1

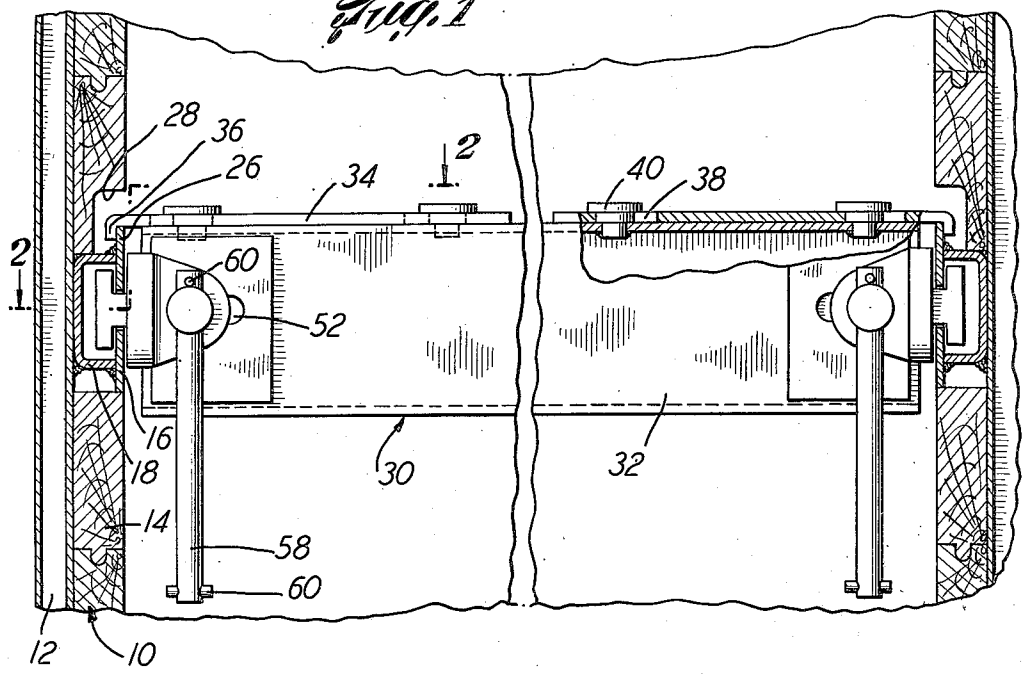

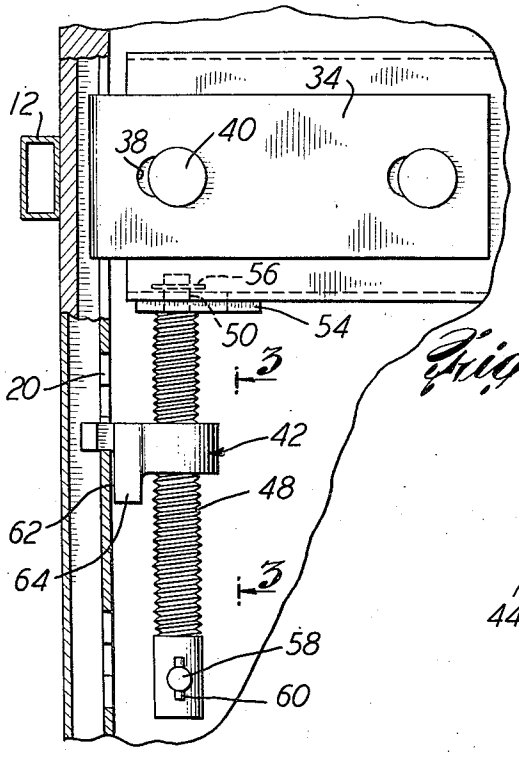

Fig. 2

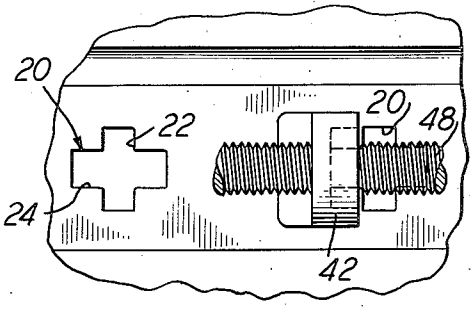

Fig. 3

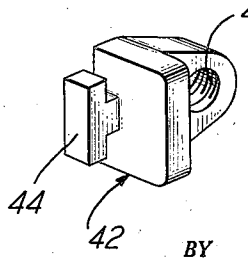

Fig. 4

INVENTOR.
P. H. THEARLE

BY

Moses Nolte Crews and Berry
ATTORNEYS

Nov. 27, 1951 P. H. THEARLE 2,576,425

ADJUSTABLE FREIGHT SECURING MEANS

Filed Aug. 20, 1949 2 SHEETS—SHEET 2

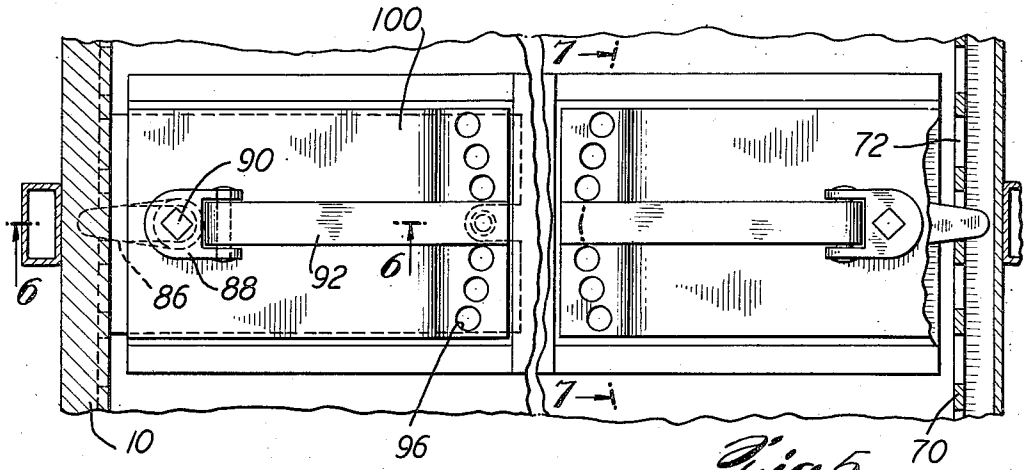

Fig. 5

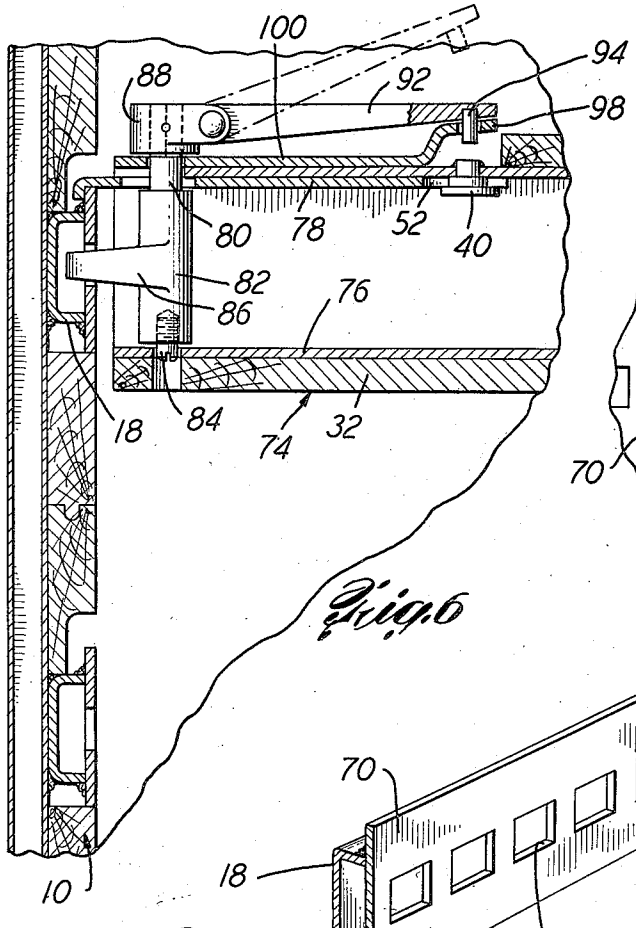

Fig. 6

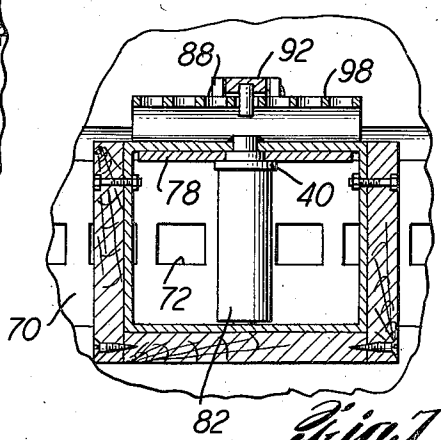

Fig. 7

Fig. 8

INVENTOR.
P. H. THEARLE
BY
Moses Nolte Crews and Berry
ATTORNEYS

Patented Nov. 27, 1951

2,576,425

UNITED STATES PATENT OFFICE

2,576,425

ADJUSTABLE FREIGHT SECURING MEANS

Philip Hampton Thearle, Orinda, Calif., assignor to Todd Shipyards Corporation, a corporation of New York

Application August 20, 1949, Serial No. 111,535

11 Claims. (Cl. 105—369)

1

This invention relates to means for securing freight against shifting or for separating shipments of less than carload lots of packaged or bulk merchandise in freight compartments such as railway box cars, motor truck vans, strong rooms of vessels, special cargo lockers, store rooms, or in any other application where it is necessary to secure stacked cargo or merchandise against shifting within a confined space or to separate various lots of shipments.

In carrying out the invention lengthwise trackways are installed in the sides or walls of the vehicle or cargo space, a plurality of trackways being usually provided at each side of the area, spaced at desirable distances apart and running parallel to the floor and ceiling. Cross stretchers or braces are provided which may be moved to any desired position on the trackways, to suit the cargo or merchandise to be secured, and locked in such position. The construction is such that the cross stretchers may be pressed against the merchandise so as to hold the same firmly in place with the desired degree of compressive force.

In general the object of the invention is to provide an improved construction of the character referred to in which the construction of the trackway is simple, strong, and inexpensive; in which the locking means for the cross stretchers is of rugged construction and may be quickly and easily operated so as to hold the cross stretchers in the desired position of adjustment and apply such degree of pressure to the cargo as may be required; in which locking devices are mounted on the cross stretchers in a manner permitting lateral adjustability so as to take care of variations in the gauge of the trackways, and in which the adjustability and position of the cross stretchers will be effectually maintained during use.

Other objects and advantages of the invention will appear in the course of the following description of certain preferred embodiments of the same shown to illustrate the principles thereof and the best modes now known of practicing the same.

In the accompanying drawings:

Figure 1 is a transverse vertical section through a portion of a vehicle body, for example a railway box car, showing portions of the side walls of the cargo compartment, one pair of trackways mounted on such walls being shown in transverse section, and one cross stretcher being shown in side elevation with portions broken away.

Figure 2 is a horizontal section on line 2—2 of Fig. 1, showing in plan one end of the cross stretcher and the locking and pressure applying means.

2

Figure 3 is a vertical longitudinal view on line 3—3 of Fig. 2, showing a portion of the trackway and of the stretcher locking means in elevation.

Figure 4 is a perspective view of the locking lug shown in Figs. 1, 2 and 3.

Figure 5 is a plan view of a modified construction of cross stretcher, the side walls of the car or other compartment being shown in horizontal section.

Figure 6 is a transverse vertical section on line 6—6 of Fig. 5.

Figure 7 is a vertical section on line 7—7 of Fig. 5.

Figure 8 is a perspective view of a portion of the trackway shown in Figs. 5, 6 and 7.

Referring in detail to the form of the invention shown in Figs. 1 to 4, the side walls of the box car or other cargo compartment are shown at 10. As illustrated these side walls comprise metal side posts 12 having inside sheathing 14. Obviously the construction of these walls is no part of the invention. Face plates 16 are mounted in the side walls and are preferably secured by welding or otherwise to stiffening members 18 which are shown in the form of channels attached to the side post 12; although the particular form of stiffening members and the manner of securing them in the cargo compartment may be varied to suit the particular conditions of application. The face plates 16 are provided at regular intervals longitudinally thereof with slots 20 which are shown as of cruciform shape, as particularly illustrated in Fig. 3, having vertical arms 22 and horizontal arms 24. The face plates and channels are shown as mounted in the longitudinal side walls of the car or other cargo compartment, the face plates preferably being flush or approximately flush with the inner surfaces of the sheathing. The face plates are shown wider than the channels 18 so as to provide overhanging flanges, and the flange 26 at the upper edge of the face plate is surrounded by a recess 28 in the wall of the cargo compartment for a purpose which will be explained.

One of the cross stretchers is shown at 30 and preferably is of tubular or box like section and may, if desired, be provided with a protective sheath 32 of plywood or other suitable material. Secured to the top of the stretcher, at each end thereof, is a supporting bracket or hook plate 34 which is shown as provided with a flanged end 36 adapted to overhang the upper edge of the

flange 26 on the face plate. The ends of the hook plates are received freely in the recesses 28 and support the stretchers upon the face plates, while they are being slid to desired position for use. One, or both, of the hook plates 34 is preferably mounted for limited free longitudinal movement on the stretcher so that the stretcher may be slid freely along the trackway irrespective of the ordinary variations in gauge due to bulging of the compartment walls or similar causes. In the construction shown the hook plates are provided with elongated slots 38 through which pass large headed studs 40 riveted in the top wall of the stretcher. As the flanges 36 of the hook plates lie behind the flanges 26 of the face plates, there is no danger of the stretcher becoming displaced from the trackways.

For locking the stretchers in desired position longitudinally of the trackways, locking lugs 42 are provided which have T-shaped heads 44 which may be inserted in any desired corresponding pair of slots in the face plates of the trackway. The heads 44 are of such size that their ends may pass through the vertical arms 22 of the slots 20, whereupon the lugs are slid longitudinally until the heads 44 lock behind the plate above and below the horizontal arm portion 24 of the slot furthest from the stretcher. The lugs are provided with internally threaded holes 46 through which pass jackscrews 48 which have stems 50 passing through slots in the wall of the stretcher and through corresponding slots 52 in reinforcing plates 54. The screws are retained in the slots by suitable means such as collars 56 shown in dotted lines in Fig. 2. Means are provided for rotating the jackscrews, such as bars 58, slidably mounted in holes in the ends of the jackscrews and prevented from dropping out by pins 60. The lugs 42 are preferably provided with broad faces 62 and overhanging portions 64 on their sides furthest from the stretchers so as to provide a firm bearing for the lugs against the face plates when pressure is applied thereto by the tightening of the jackscrews. The adjustable screw connection between the lugs and the stretchers permits the stretchers to be located at any point along the trackways by selecting proper slots for application of the lugs and then adjusting the jackscrews. The jackscrews are slightly longer than the distance between adjacent slots so that universal adjustability is provided. The jackscrews may also be used to force the stretcher against the cargo when necessary so as to hold the same firmly in position. The slidable bars 58 permit the screws to be rotated a one-half turn at a time to any extent necessary. It will be seen that the lugs 42 interlock with the face plates so that they are always properly engaged therewith irrespective of variations of the gauge of the trackways. The ends of the jackscrews being loosely mounted in the slots 52 in the stretcher may move longitudinally thereof sufficiently to take care of such variations.

Figures 5 to 8 show a modified construction of adjustable stretcher. In this construction the face plate 70 is shown as welded to a stiffening channel 18, pairs of which are mounted in the walls 10 of the car or other cargo compartment. The face plates 70 have a plurality of closely spaced slots 72 therein which may be of any desired shape such as round or rectangular. These slots are preferably spaced closer together than the slots 20 shown in the construction previously described. The stretchers 74 comprise metal members 76 of box like form which are sheathed if necessary by a sheathing 32 of plywood or the like. Supporting hook plates 78 are provided at the ends of the stretcher, these hook plates being preferably mounted, in the construction shown, on the inside of the top wall of the stretcher. These plates are provided with elongated slots 52, as in the previous construction, the plates being adjustably retained at their inner ends by studs 40. Passing through the slots at the outer ends of the bracket plates are the bearing pins 80 of rotating latch members 82, the other ends of which carry bearing studs 84 which may be made in the form of removable screw plugs, or otherwise removably secured in position. The rotating latch members 82 carry projecting lugs or locking arms 86, which are adapted to project into corresponding slots 72 in the face plates. Secured to the upper ends of the bearing pins 80 are heads 88, such upper ends being preferably squared as indicated at 90 so that the heads 88 are held against turning with respect to the latch members. Lever arms 92 are pivoted to the heads 88, the lever arms having means for locking them in adjusted position which are shown as comprising a pin 94 on the lever arm which is adapted to engage in one or the other of the holes 96 in a raised flange 98 of a locking plate 100 secured to the top of the cross stretcher. With this construction the levers 92 may be swung upwardly, as shown in dotted lines in Fig. 6, so as to disengage the pins from the locking plates. The levers are then rotated far enough to permit the lugs 86 to disengage the slots in the face plates, whereupon the stretchers may be slid along the trackway to the desired position. The levers are now swung so as to engage the lugs 86 in the corresponding slots and are locked in such position by engaging the pins 94 on the ends of the levers with appropriate holes 96. By choosing a proper pair of slots and adjusting the angularity of the lugs any adjustment is possible. The lugs are of such length with respect to the distance between adjacent slots as to provide whatever range of movement is necessary, and they are also of such length as to project well into or through the slots so that a considerable variation in the gauge of the trackways is permitted without danger of the lugs not properly engaging in the slots. By rotating the latch members by means of levers 92 any required degree of compression may be placed upon the cargo.

With the construction just described it will be seen that both the longitudinal vertical faces of the stretcher are flush, so as to present no obstruction to the cargo.

Where the trackways are mounted in the side walls of a box car or other compartment having side doors, portable sections of the trackway can be provided to span the door area so as to permit the stretchers being used to secure cargo loaded opposite to a door opening.

While certain preferred embodiments of the invention have been illustrated and described in detail, it is to be understood that changes may be made therein and the invention embodied in other structures. It is not, therefore, the intention to limit the patent to the specific constructions illustrated, but to cover the invention broadly in whatever form its principle may be utilized.

I claim:

1. Means for securing freight in a cargo compartment comprising trackways mounted in sub-

stantially parallel relationship along the sides of the compartment, said trackways comprising stiffening channels having face plates secured thereto, said face plates having holes formed therein spaced at intervals longitudinally of the trackways, the upper edges of the face plates extending above the stiffening channels being smooth and even to form guide rails, and a cross stretcher extending transversely between said trackways, said cross stretcher having hook plates mounted thereon and extending beyond the ends thereof and riding on said guide rails, said plates having hooked portions engaging behind the edges of the plates, and locking means independent of the hook plates carried by the ends of said cross stretcher having parts for insertion into and engagement with corresponding holes in the face plates for locking the stretcher against movement longitudinally of the face plates.

2. Means for securing freight in a cargo compartment comprising trackways mounted in substantially parallel relationship along the sides of the compartment, said trackways comprising stiffening channels having face plates secured thereto, said face plates having holes formed therein spaced at intervals longitudinally of the trackways, the upper edges of the face plates extending above the stiffening channels being smooth and even to form guide rails, and a cross stretcher extending transversely between said trackways, said cross stretcher having hook plates mounted thereon extending beyond the ends thereof and riding on said guide rails, said plates having hooked portions engaging behind the edges of the plates, the hook plate at at least one end of the stretcher being capable of limited free sliding movement longitudinally of the stretcher, and locking means independent of the hook plates carried by the ends of said cross stretcher having parts for insertion into and engagement with corresponding holes in the face plates for locking the stretcher against movement longitudinally of the face plates.

3. Means for securing freight in a cargo compartment comprising trackways mounted in substantially parallel relationship along the sides of the compartment, said trackways comprising stiffening channels having face plates secured thereto, said face plates having holes formed therein spaced at intervals longitudinally of the trackways, the upper edges of the face plates extending above the stiffening channels being smooth and even to form guide rails, and a cross stretcher extending transversely between said trackways, said cross stretcher having hook plates mounted thereon extending beyond the ends thereof and riding on said guide rails, said plates having hooked portions engaging behind the edges of the plates, the hook plate at at least one end of the stretcher being capable of limited free sliding movement longitudinally of the stretcher, and locking means at the ends of said cross stretcher for engagement with corresponding holes in the face plates, said locking means comprising a lug having a head for interlocking engagement with a hole in the face plate and a jackscrew carried by said lug and engaging the cross stretcher near its end, said jackscrew being attached to said stretcher by means permitting a limited free movement of the screw in a direction longitudinally of the cross stretcher.

4. Means for securing freight in cargo compartments as claimed in claim 3 in which the holes in the face plates are cruciform slots, the lugs having T-head portions adapted to interlock in said slots.

5. Means for securing freight in cargo compartments comprising trackways mounted in substantially parallel relationship along the sides of the compartment, each trackway being provided with a plurality of spaced slots, and a cross stretcher extending transversely between said trackways, said cross stretcher having locking means at each end thereof adapted to be engaged with the corresponding slots of a pair, said locking means comprising latch members mounted at the ends of said stretchers for rotation about axes transverse to the axis of the stretcher, said latch members having lugs movable into and out of engagement with said slots by rotary motion of the latch members, crank levers for rotating said latch members about their axes and means for locking said crank levers in adjusted angular position.

6. Means for securing freight in cargo compartments comprising trackways mounted in substantially parallel relationship along the sides of said compartment, said trackways comprising hollow members having face plates provided with longitudinally spaced slots opening into said hollow members, and a cross stretcher extending transversely between said face plates, said cross stretcher having locking means at each end thereof adapted to engage with corresponding slots of a pair, said locking means comprising rotary latch members carried by the ends of the stretcher, said latch members having elongated lug portions adapted to extend through the slots in the face plates into said hollow members, means for forcibly rotating said latch members and means for locking said latch members in adjusted position.

7. A cross stretcher for securing freight in cargo spaces, said stretcher having a portion projecting from each end thereof provided with a flange forming a track engaging hook, at least one of said projecting portions being capable of limited free adjustment in the direction of the longitudinal axis of the stretcher, jackscrews carried by the ends of the stretcher having their axes at right angles to the longitudinal axis of the stretcher, and track engaging lugs carried by said jackscrews, at least one of said jackscrews being mounted for limited free adjustability in the direction of the longitudinal axis of the stretcher.

8. A cross stretcher for securing freight in cargo spaces, said stretcher comprising a hollow metal box-like section having means at each end thereof for locking said stretcher to a trackway, said locking means comprising rotary latches having bodies extending between the upper and lower walls of the stretcher and mounted for rotation therebetween about axes transverse to the axis of the stretcher, said latch members having elongated lugs projecting therefrom beyond the ends of the stretcher, crank levers secured to said rotary latch members for rotating the same, and means for locking said crank levers in adjusted position.

9. A trackway for use in cargo compartments for holding a freight retaining stretcher, said trackway comprising a long hollow stiffening member having a face plate extending lengthwise thereof, the upper edge of the face plate being smooth and even and extending above the body of the stiffening member to form a guide track for the stretcher, said face plate having spaced cruciform slots therein.

10. A trackway for use in cargo compartments for holding a freight retaining stretcher, said trackway comprising a longitudinally extending stiffening channel having a face plate secured to the legs of the channel, at least one longitudinal edge of the face plate extending slightly beyond the corresponding leg of the channel parallel with the axis of the channel and being smooth and even to provide a guide track, the face plate having longitudinally spaced holes therein opening into said channel.

11. Means for securing freight in a cargo compartment comprising trackways mounted in substantially parallel relationship along the sides of the compartment, said trackways comprising stiffening channels having face plates secured thereto, said face plates having holes formed therein spaced at intervals longitudinally of the trackway, the upper edges of the face plates extending above the stiffening channels and being smooth and even to form guide rails, and a cross stretcher extending transversely between said trackways, said cross stretcher having hook plates mounted thereon extending beyond the ends thereof and riding on said guide rails, said plates having hooked portions engaging behind the edges of the plates, the hook plate at at least one end of the stretcher being capable of limited free sliding movement longitudinally of the stretcher, and locking means independent of the

hook plates at the ends of said cross stretcher for engagement with corresponding holes in the face plates for locking the stretcher against movement longitudinally of the face plates, said locking means comprising latch members mounted at the ends of said stretchers for rotation about axes transverse to the axis of the stretcher, said latch members having lugs movable into and out of engagement with said slots by rotary motion of the latch members, crank levers for rotating said latch members about their axes and means for locking said crank levers in adjusted angular position.

PHILIP HAMPTON THEARLE.

REFERENCES CITED

The following references are of record in the file of this patent:

UNITED STATES PATENTS

Number	Name	Date
1,749,473	Des Islets	Mar. 4, 1930
2,056,704	Anderson	Oct. 6, 1936
2,354,861	Hermann	Aug. 1, 1944
2,425,875	Hermann	Aug. 19, 1947
2,440,437	Fahland	Apr. 27, 1948
2,466,728	Nampa	Apr. 12, 1949
2,476,362	Fahland	July 19, 1949
2,497,683	Nampa et al.	Feb. 14, 1950