Sept. 26, 1939. G. A. SCHETTLER 2,173,982

WORK SUPPORT FOR LEATHER WORKING MACHINES

Filed Sept. 7, 1938

Fig. 1.

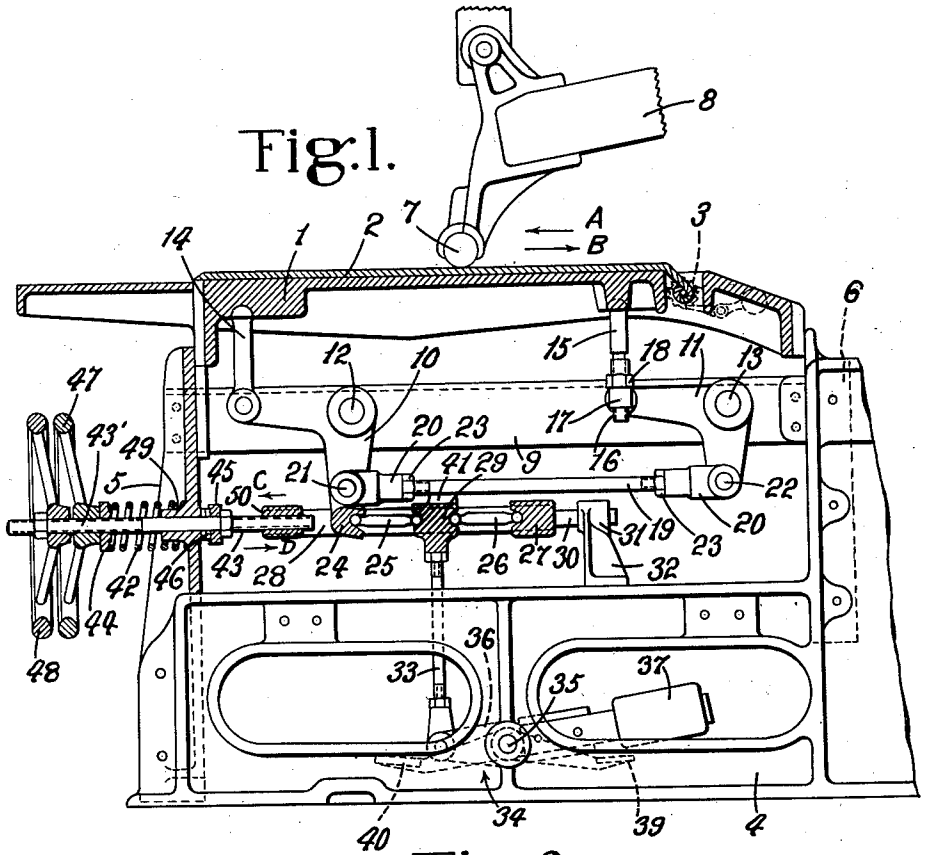

Fig. 2.

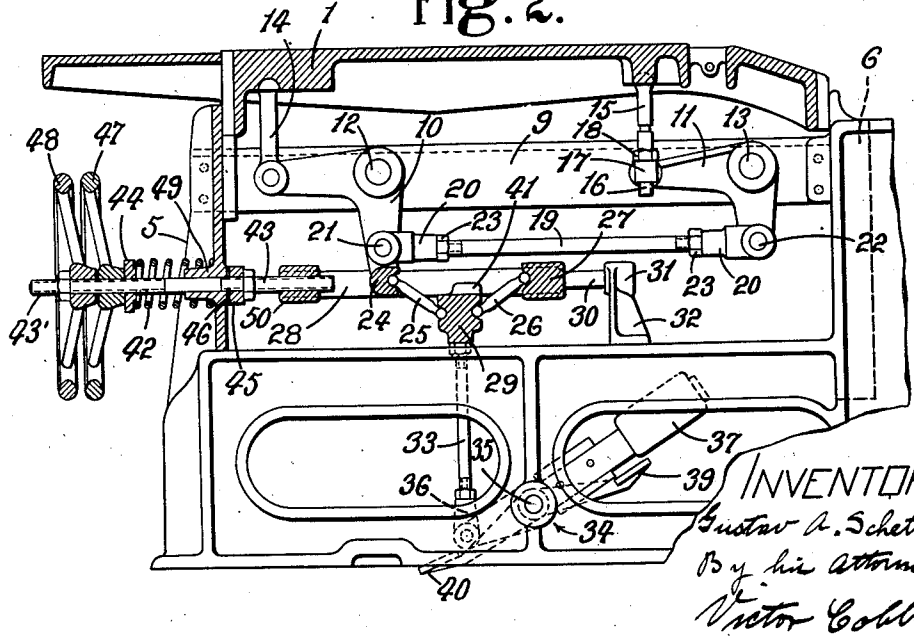

INVENTOR
Gustav A. Schettler
By his attorney
Victor Cobb.

Patented Sept. 26, 1939

2,173,982

UNITED STATES PATENT OFFICE

2,173,982

WORK SUPPORT FOR LEATHER WORKING MACHINES

Gustav A. Schettler, Leeds, England, assignor to The Turner Tanning Machinery Company, Portland, Maine, a corporation of Maine

Application September 7, 1938, Serial No. 228,806
In Great Britain October 1, 1937

12 Claims. (Cl. 149—17)

This invention relates to machines for performing operations upon hides, skins and leather. While the invention is illustrated as embodied in a work support for a machine specially designed to glaze suitably prepared leather surfaces, it is to be understood that the invention and various important features thereof may have other applications and uses.

It is an important feature of the invention that a bed or other support for work pieces, while the latter are being presented to a tool, is arranged to be operated between work receiving and work presenting positions by a toggle having a spring associated therewith and so arranged that straightening of the toggle places the spring under suitable stress to support yieldingly the bed or work support against pressure of the tool on the work piece. An advantage of this construction resides in the fact that strengthening of a treadle operated toggle to lift the work support to operative position automatically relieves pressure on the toggle in all directions except that in which pressure is exerted thereon by the said spring, thereby relieving the foot of the operator from the effects of pressure on the work support exerted by the operating tool.

From another viewpoint the invention includes a single compressible spring for supporting both ends of a bed or other work support yieldingly against the pressure of the work treating tool in an arrangement wherein a toggle under control of the operator is straightened against the resistance of the spring, whereby the spring is properly tensioned effectively to support the bed or work support at the same time that straightening of the toggle, at a minimum of effort on the part of the operator, lifts the bed or work support to present a work piece for treatment by said tool.

With these and other important features and advantages in mind, the invention will now be described in detail and then pointed out more particularly in the appended claims.

In the drawing,

Fig. 1 is a side elevation, partly in section, of the lower part of the machine with the work supporting table or bed in a raised position; and

Fig. 2 is a similar view to Fig. 1 but showing the said table or bed in a lowered position.

In the illustrated embodiment of the invention, which is specially intended for performing glazing and analogous operations on leather, there is provided a substantially horizontal work supporting table or bed 1 on the top surface of which is stretched a sheet or blanket 2 of suitable material having associated therewith a rotary tensioning device, such as 3, adapted to be held in adjusted position by a weighted pawl as indicated in Fig. 1. The said table or bed is supported in the lower or base portion of the machine frame, which latter comprises two side frame members such as 4 suitably spaced apart by and bolted to members 5 and 6. The frame member 5 is disposed at the front of the machine while the member 6 is arranged to extend across the top of the aforesaid lower or base portion.

It is to be understood that only so much of the complete machine is shown as is necessary to illustrate the application thereto of the invention. In this respect the usual superstructure for supporting the means for carrying and operating the tool has not been shown, although in Fig. 1 the said tool is represented at 7, the tool being adapted to operate with a rapid reciprocatory motion in the directions indicated by the arrows A and B. As is customary in machines of this type, the tool is adapted to be operated by or from a rotating crank through the medium of a connection rod, a portion of which is shown at 8.

Suitably attached to the base portion of the frame and arranged one at each side of the latter are two bracing members such as 9 between which are supported two bell cranks 10 and 11. For the sake of clarity, only one of the bracing members 9 is shown in the drawing, but as will be understood, the pivot pins 12 and 13 for the bell cranks 10 and 11, respectively, extend transversely through and are supported by both of said bracing members. As will be seen, the bell cranks are each arranged so that one of the arms thereof is substantially horizontally disposed and to the outer ends of these horizontal arms are attached members which serve to support the table or bed 1. In the specific example now being described, a single supporting member 14 which projects downwardly from the under side of the work supporting table or bed at the front end thereof is connected at its lower end to the outer end of the horizontal arm of the bell crank 10, while two somewhat similar supporting members projecting downwardly from the rear end of the said table or bed are connected to the corresponding arm of the other bell crank 11. Thus, as will be understood, the table or bed is supported at three points although only one of the rear supporting members—represented at 15—is shown in the drawing. In order to provide connections between two members 15 and the bell crank 11, the latter may have two horizontal arms or a single horizontal arm with a cross piece rigidly

secured to the end thereof and having provision for pivotally supporting the lower end of each member 15. It is customary in machines of the type aforesaid to provide some means whereby the work supporting table or bed can be tilted sideways to a slight extent. This fine adjustment takes care of variations in the thickness dimensions of different batches of work and also of differences in the opposite ends of the glass cylinder commonly employed as a glazing tool. To enable such adjustments to be effected in the present machine one of the rear supporting members such as that shown at 15 is formed or provided with a screw threaded portion 16 adapted to have engagement with a correspondingly threaded block 17 pivotally mounted at the outer end of the appropriate arm of the bell crank 11. The member 15 is capable of being rotated by any suitable means (not shown) and, by appropriate manipulation of said member, the table or bed 1 can be tilted sideways as and when required. A lock nut 18 is provided to set the member 15 in any position to which it is adjusted. It will be understood, of course, that the three supporting members are so disposed in relation to each other and connected to the table or bed as to permit the latter being readily tilted in the required manner.

The substantially vertical arms of the two bell cranks are connected together at their lower ends by means of a tie rod 19. At each end, the said rod has a screw thread engagement with a coupling element 20 which in turn is pivotally mounted on the corresponding bell crank 10 and 11. The elements 20 are adapted to turn on pivot pins 21 and 22 suitably carried by the bell cranks 10 and 11, respectively. One end of the rod 19 is formed with a right-hand and the other end with a left-hand thread and the aforesaid coupling elements are correspondingly threaded so that by rotating the rod the distance between the pivot pins 21 and 22 is varied. Since in the construction illustrated the bell crank 10 is normally restrained from movement, as will be hereinafter explained, then by manipulating the rod 19 the bell crank 11 will be caused to turn on the pivot pin 13 to a slight extent with the result that the rear end of the table or bed 1 will be raised or lowered to a corresponding extent according to the direction in which the rod is turned. Lock nuts 23 are provided in association with the rod 19 to set the bell crank in any desired position. By the means just described it is consequently possible to adjust the table or bed in such a way that it can be set either parallel or in a slightly inclined position with respect to the working stroke of the tool. In this way provision is made whereby a pressure can be applied to the work at one end of the table or bed which is harder or lighter than the pressure applied at the other end.

In accordance with an important feature of the invention, the substantially vertically disposed arm of the bell crank 10 is formed or provided with an extension 24 which is adapted to be acted upon for the purpose of effecting the raising and lowering movements of the table or bed to bring the work into and out of contact with the tool 7. The said extension constitutes a bearing for the outer end of one of the links 25 of a toggle joint, the other link of which is indicated at 26. The outer end of the last-mentioned link is free to swivel in a bearing 27 formed on or secured to a longitudinally slidable bar 28, and the two links 25, 26 are suitably connected at their inner ends to a center block 29. The bar 28 is formed at its rear end with a reduced portion 30 which is supported by and adapted to slide in a suitable bearing 31 in a bracket 32 attached to the machine frame. The bar 28, moreover, is disposed at one side of and is unconnected both with the extension 24 and the center block 29, which latter is connected by means of an adjustable connecting rod 33 with a double-ended treadle 34.

Conveniently the said treadle is rigidly secured to a short shaft or spindle 35 which is suitably journaled in the machine frame and has extending therefrom an arm 36 to which the lower end of the rod 33 is connected. The shaft or spindle 35 has associated therewith a weight 37 which serves to counterbalance the combined weight of the table or bed 1, the toggle mechanism and the associated connections, so that whichever end of the treadle is depressed the latter will remain in the desired position until again acted upon by the operator of the machine. The arrangement of the parts so far described is such that when the foot portion 39 of the treadle is depressed, the rod 33 is moved upwardly to straighten the toggle links 25 and 26 and consequently to turn the bell cranks 10 and 11 on their pivot pins in such a direction as to raise the table or bed 1 bodily into the position shown in Fig. 1. When the table or bed is raised to this position, any work piece supported thereon is brought into contact with the tool 7. When now, it is desired to effect a separation of the work from the tool, the foot portion 40 of the treadle is depressed with the result that the toggle links are pulled downwards so that the bell cranks are suitably turned to lower the table or bed into the position shown in Fig. 2. It will be understood, of course, that the toggle mechanism only acts directly on the bell crank 10 and that any turning movement imparted to the latter is transmitted to the bell crank 11 through the rod 19. In order to prevent the toggle links from passing the dead center position indicated in Fig. 1 when the foot portion 39 is depressed, the center block 29 is conveniently formed with an abutment 41 adapted to come into contact with the under side of the rod 19. If desired, the stop or abutment 41 may be so dimensioned that the toggle cannot be completely straightened. In that case, the toggle will be broken, upon releasing the treadle 39, by the weight of the table without using the treadle 40. The construction, moreover, is such that when the table or bed is in either of the two positions shown, the bell crank 10 is restrained from movement by the toggle mechanism; consequently when the rod 19 is adjusted in the manner and for the purpose aforesaid, only the bell crank 11 is moved.

In the particular embodiment of the invention now being described, the table or bed 1 is made yieldable by a single compression spring 42 which is so arranged as to exert a pull on the bar 28 in the direction of the arrow C in Fig. 1. Conveniently, and as shown, the bar 28 is supported at the front end thereof by a screw threaded spindle 43 which extends through the frame member 5. The spring 42 surrounds the spindle 43 and abuts at one end against the member 5 and at the other end against an abutment plate or ring 44 on said spindle. On the inside of the base portion of the frame, the spindle 43 is fitted with an adjustable stop collar 45 adapted normally to abut against a face 46 provided at the back of the frame member 5 for the purposes of

limiting the expansion of the spring **42** and determining the position of the said spindle and hence also of the bar **28**. Provision of any suitable character is preferably made whereby the pressure exerted by the said spring on the abutment plate or ring **44** can be varied so as correspondingly to modify the yieldability of the table or bed and thus vary the pressure at which the work is operated upon by the tool. For this purpose it is convenient to provide a hand wheel **47**, the central boss of which is suitably screw threaded internally for engagement with a screw threaded portion **43'** of the spindle **43**. The said hand wheel is positioned in front of the abutment plate or ring **44** so that when the wheel is rotated the spring **42** is either compressed or permitted to expand according to the direction of rotation. In this way the compression of the spring can be regulated to achieve the desired result without in any way affecting the position of the table or bed **1**. Now, as in all machines of the type concerned, when the operating tool **7** moves over the table or bed **1** the latter is depressed to a slight extent. Whenever the table or bed is depressed in this way, the bell cranks **10** and **11** are turned in a counterclockwise direction with the result that the bar **28** together with the spindle **43** are moved longitudinally in the direction of the arrow D (Fig. 1) and this movement causes the stop collar **45** to move away from the face **46** and the spring **42** to be compressed. Thus the load of the compression spring **42** is applied through the table or bed on to the work with equal force throughout the full length of the operating tool. As already explained, by suitable movement of the hand wheel **47** either a hard or a light pressure can be applied.

As hereinbefore mentioned, the machine is provided with some means whereby the table or bed **1** can be adjusted bodily in relation to the tool. In the example illustrated, a hand wheel **48** is provided for effecting such an adjustment by raising or lowering the table or bed bodily to the required extent. To enable the desired effect to be achieved, the spindle **43** is made rotatable in a bearing **49** formed on the frame member **5** and the hand wheel **48** is rigidly secured to the front end of the said spindle, the other end of the latter being screw threaded for engagement with a correspondingly screw threaded part **50** formed on or secured to the front end of the bar **28**. Thus, by turning the hand wheel **48**, the bar **28** is caused to move longitudinally in the bearing **31** and, according to the direction of rotation of the hand wheel **48**, the toggle mechanism is operated either to raise or to lower the table or bed **1** for adjustment purposes. If, at any time, it is desired to make an adjustment of the table or bed in the manner just described without varying the pressure applied on the work piece by the tool, then both the hand wheels **47** and **48** are turned together.

In the operation of the machine a tanned skin, such as a suitably prepared kid or calf skin, is placed by the operator upon a bed **1** and shifted between strokes of the tool **7**, care being taken to see that each path of the tool on the surface of the work piece overlaps that of the preceding stroke of the tool. It is to be understood that at the time of introducing the work piece the bed **1** is in the depressed position shown in Fig. 2 and that ordinarily the tool **7** is in continuous oscillation. The operator throws the work piece over the bed **1** from one side thereof and, having located it on the bed, he depresses the treadle **39** thereby initiating treatment of the work piece. At each stroke of the tool the bed yields slightly against the resistance of the spring **42**. Suitable treatment of the work is secured through one or more of the adjustments provided to suit the requirements of the work piece, particularly as to its thickness dimensions, the degree of firmness of the fiber, and the quality of the finish on the surface.

Having thus described my invention, what I claim as new and desire to secure by Letters Patent of the United States is:

1. In a work support for use in leather treating machines, a work-supporting bed, a single compression spring connected to the bed to resist yieldingly downward movement of both ends of the bed, and a toggle mechanism interposed between the work supporting bed and the spring and so arranged that, when the toggle is straightened, the spring is put under stress yieldingly to resist downward movement of the bed.

2. In a work support for use in leather treating machines, a work supporting bed, a treadle operated toggle connected to said bed and movable under the control of the operator to effect movement of the bed between work receiving and work presenting positions with respect to a work treating tool, and a spring in line with the straightened toggle and arranged to be put under stress upon straightening of the toggle, whereby the bed is yieldingly supported by said spring and tool pressure on the work pieces is transmitted to the spring and not to the treadle.

3. In a work support for use in leather treating machines, a bed, a pair of interconnected bell cranks having connections to support the bed, a toggle connected to one of the bell cranks and arranged to be operated to effect movement of the bell cranks to lift and to lower the bed, and a manually operable member connected to said toggle alternately to straighten and to break the toggle, the straightened toggle having the effect of removing pressure on the bed from said manually operable member.

4. In a work support for use in leather treating machines, a bed, a pair of interconnected bell cranks having connections to said bed, a spring, connections between the spring and one of the bell cranks to resist yieldingly movement of the bell cranks in one direction, a toggle connected to one of the bell cranks, and means to straighten the toggle against the opposing force of said spring whereby the bed may yield downwardly against the resistance of said spring.

5. In a work support for use in leather treating machines, a bed, a pair of interconnected bell cranks having connections to support the bed, a member movably mounted in the frame of the machine, a spring to resist yieldingly movement of said member in one direction, a toggle connected to said member and to one of the bell cranks, and means to operate the toggle to straighten the latter thereby moving the bell cranks to lift the bed, the arrangement being such that downward movement of the bed is resisted yieldingly by said spring.

6. In a work support for use in leather treating machines, a bed, a pair of bell cranks having connections to support the bed, a link connecting said bell cranks, a toggle connected to one of the bell cranks, and means under control of the operator to operate the toggle, thereby to effect movement of the bell cranks to lift and to lower the bed.

7. In a work support for use in leather treat-

ing machines, a bed, a pair of bell cranks having connections to support the bed, a link connecting said bell cranks, a rod slidable in bearings in the frame of the machine, a spring to resist yieldingly movement of the rod in one direction, a toggle connected to said rod and to one of the bell cranks, and means to operate the toggle to straighten the latter thereby moving the bell cranks to lift the bed, the arrangement being such that downward movement of the bed is resisted yieldingly by said spring.

8. In a work support for use in leather treating machines, a bed, a pair of bell cranks having connections to said bed, a link connecting the bell cranks, a spring, connections between the spring and one of the bell cranks to resist yieldingly movement of the bell cranks in one direction, a toggle connected to one of the bell cranks, and a treadle having connections to straighten the toggle against the pressure of said spring whereby the bed may yield downwardly against the resistance of said spring.

9. In a work support for use in leather treating machines, a bed, a pair of bell cranks supported in the frame of the machine, each of the bell cranks having a substantially horizontal arm, three members between the bed and the bell cranks arranged to furnish a three-point support for the bed, two of the three members being arranged between the front end of the bed and the substantially horizontal arm of the adjacent bell crank, a link connecting the bell cranks, a spring to resist yieldingly movement of the bell in one direction, and a toggle under the control of the operator and arranged to move one of the bell cranks in a direction to place said spring under stress whereby downward movement of the bed is resisted yieldingly by said spring.

10. In a work support for use in leather treating machines, a bed, a pair of bell crank members connected to said bed to support the latter, a link connecting the bell cranks, a spring connected to one of the bell cranks yieldingly to resist downward movement of the bed, and a toggle mechanism under the control of the operator to move one of the bell cranks to put the spring under pressure.

11. In a work support for use in leather treating machines, a bed, a pair of interconnected bell cranks having connections to support the bed, a single compression spring connected to one of the bell cranks to resist downward movement of the bed, means to adjust the resistance of the spring, means comprising a hand wheel to effect adjustment of the bell crank to lift or to lower the bed, and a toggle mechanism interposed between one of the bell cranks and said spring, whereby when the toggle is straightened, the spring is put under suitable compression yieldingly to resist downward movement of the bed.

12. In a work support for use in leather treating machines, a bed, a pair of bell crank members connected to support and operate a bed, a link connecting said bell crank members, a toggle mechanism connected to one of the bell crank members to operate the latter, and a spring connected to the toggle mechanism to resist yieldingly straightening of the toggle and to provide resistance to movement of the bell crank members in one direction whereby the bed is yieldingly supported against downward movement.

GUSTAV A. SCHETTLER.