Dec. 17, 1963 G. SCHNEIDER 3,114,410

GAS FUELED INFRARED GENERATORS

Filed Aug. 31, 1960 2 Sheets-Sheet 1

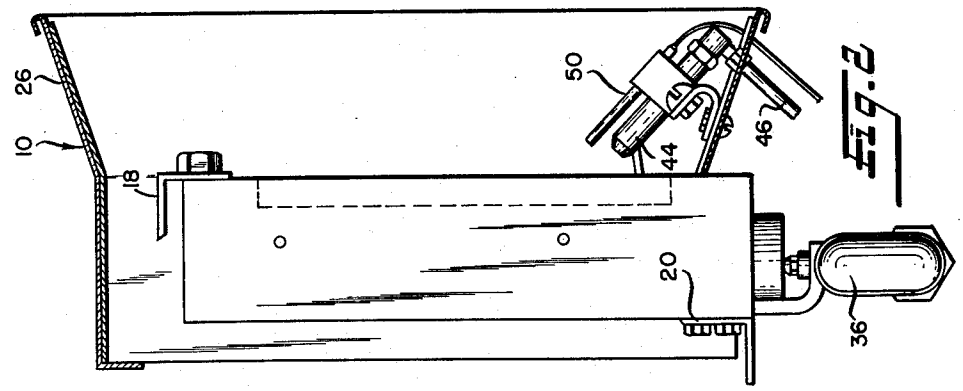

Fig. 2

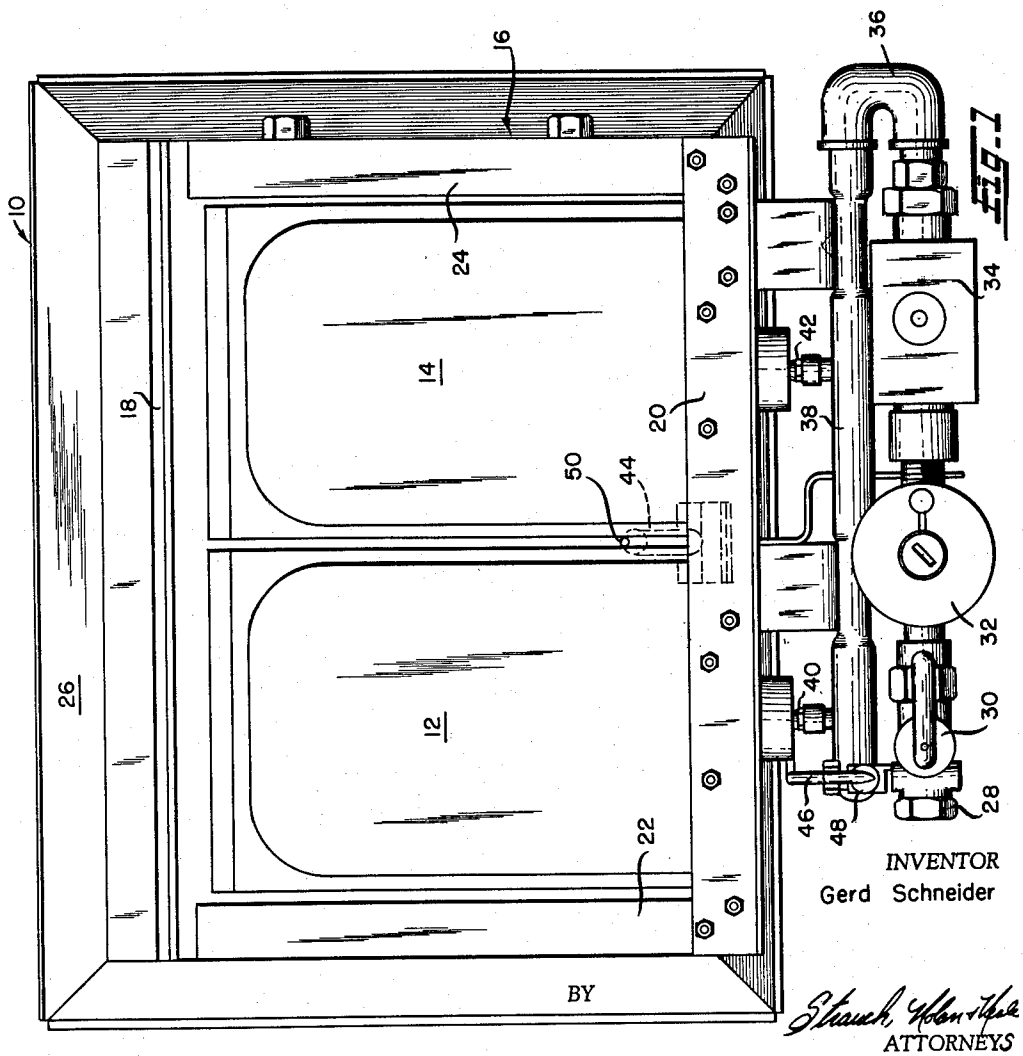

Fig. 1

INVENTOR
Gerd Schneider

BY

Strauch, Hohenfeld
ATTORNEYS

Dec. 17, 1963 G. SCHNEIDER 3,114,410

GAS FUELED INFRARED GENERATORS

Filed Aug. 31, 1960 2 Sheets-Sheet 2

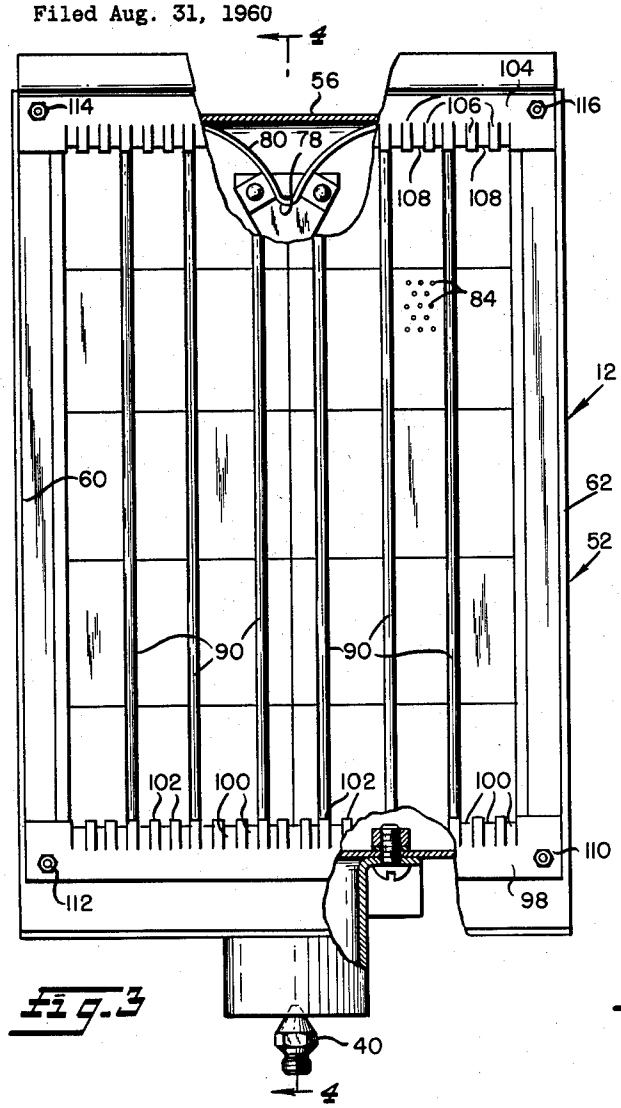

Fig. 3

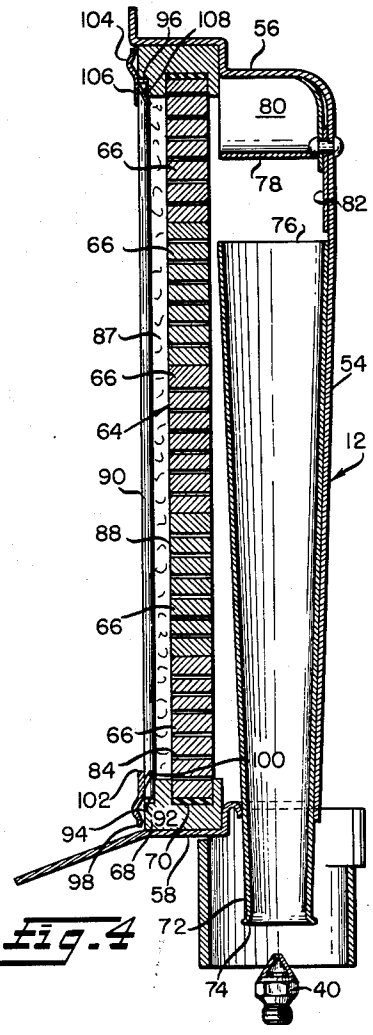

Fig. 4

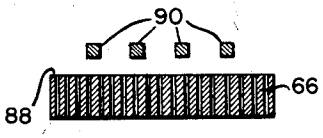

Fig. 5

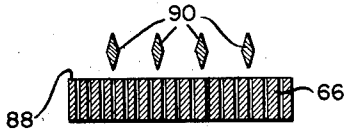

Fig. 6

INVENTOR
Gerd Schneider

BY Strauch, Nolan + Neale

ATTORNEYS

United States Patent Office 3,114,410 Patented Dec. 17, 1963

3,114,410
GAS FUELED INFRARED GENERATORS

Gerd Schneider, Detroit, Mich., assignor to Hupp Corporation, a corporation of Virginia

Filed Aug. 31, 1960, Ser. No. 53,140
4 Claims. (Cl. 158—99)

The present invention relates to improvements in infrared generators, and more particularly to improvements in gas burning infrared generators of the type which are provided with a surface adapted to be heated to visible radiance by the combustion of a fully combustible mixture of inter-mixed gaseous fuel and air at and adjacent such surface after passage through perforations in such surface. The wall of such infrared generators may be formed of a multiple screen construction but is preferably formed of a plurality of juxtaposed perforated ceramic tiles as disclosed in United States Patent 2,775,294 to Gunther Schwank.

In devices constructed in accord with said Schwank patent, a gas-air mixture issues through a number of small holes in a ceramic plate and burns as it leaves the holes against the face of the plate, heating it to incandescence. The hot plate emits infrared radiation which is utilized for space heating, industrial processing or other purposes.

The gas-air mixture is usually produced by induction of air into a venturi tube by the energy of a stream of gas which issues from an orifice and flows through the venturi throat to a plenum chamber behind the perforated ceramic plate. All of the air for combustion is thus premixed with the gas as primary air.

It has been found heretofore that the emission of infrared radiation from such a generator can be augmented by placing a wire screen about ¼ inch in front of the hot plate. This screen is also heated to incandescence, adding its radiation to that from the plate, and since it also emits such radiation back to the plate, the temperature of the plate is increased, which results in still further increase in the total emission from the generator.

The use of such a wire screen for this purpose has however, two basic disadvantages. Continued operation at the high temperature reached by the screen results in its becoming warped or even burned, out, although the screen is made of material having high heat resistance. Further the presence of the screen hinders the exit of products of combustion from the flame, which in turn creates a back-pressure on the gas-air mixture in the plenum chamber, reducing the amount of air which can be induced through the venturi, making it more difficult to obtain perfect combustion with exhaust products free from CO.

These difficulties have been alleviated to some extent in prior devices by covering only part of the face of the ceramic with the screen, as by placing strips of Nichrome wire cloth of wide mesh over portions of the face of the ceramic, thus leaving areas where products of combustion can escape without passing through the screen, the smaller pieces of screening also tending to warp less under heat than would a larger screen covering the entire plate. While this reduces the exhaust gas blocking and the screen warpage problems, it materially decreases the desired-reradiation toward and from the burner radiant face.

The warping of the screen is due to three factors: (*a*) The woven wires composing the screen are not free to expand, so the entire screen bulges under the heat; (*b*) the screen must be made of comparatively light wire, whose strength when hot is very low and not sufficient to support its own weight when heated for long periods; (*c*) continued operation at high temperature results in creep, or gradual elongation of the metal, which further distorts the screen. The present invention obtains the advantages of a full surface screen but eliminates these faults of the wire screen. Briefly the present invention embodies wire rods placed parallel to the ceramic plate, uniformly spaced over its surface, parallel to each other and parallel to the direction of flow of the products of combustion.

The face of the ceramic plate is never placed in a horizontal position, but is either vertical, slanted or if the radiation is to be directed downward, it is tilted slightly so that one edge is on the high side where the products of combustion are exhausted. The rods are supported with one end at the high side, the other at the low side, so that the rods extend longitudinally of the direction of flow of the exhaust gases or combustion products so that such products are free to flow to the outlet without interference from the rods. These rods are made of heat resisting metal, approximately ⅛ inch in diameter and for a 9″ x 6″ plate are nine inches in length, extending lengthwise of the plate. They are freely supported to accommodate thermal expansion without restraint by embossing metal strips attached to a ceramic frame surrounding the ceramic plate. The number of such rods used on a 9″ x 6″ plate varies from a minimum of six to a maximum of twenty, depending on the results desired. Since the rods are free to expand, are heavy enough to support their own weight when heated and are made of material which does not creep under the operating conditions, they will last indefinitely. Since there is no obstruction to the flow of exhaust gases to the outlet, they do not interfere with combustion.

With the foregoing general discussion in view, the principal objects of the present invention are to provide in a gas burning infrared generator having a perforated, preferably ceramic, radiant wall through the apertures of which a substantially completely combustible mixture of inter-mixed gaseous fuel and air can pass from a super-atmospheric pressure source for combustion in a combustion zone at and adjacent the exposed surface thereof to heat such exposed surface to visible radiance, a radiation augmenting device disposed closely adjacent such exposed surface and adapted to be heated, and to withstand without deterioration heating, to a temperature in excess of that to which such exposed surface is heated by combustion at such zone and adapted to emit radiation toward and from such exposed surface to augment the heating of such combustion upon each exposed surface and simultaneously augment the radiation from such exposed surface without material interference with the flow of combustion products from said zone.

The foregoing and other objects of the present invention will become more fully apparent by reference to the appended claims and as the following detailed description proceeds in reference to the accompanying drawings wherein:

FIGURE 1 is a rear elevational view of a space heater incorporating a pair of infrared generators constructed according to the present invention and equipped with controls and a reflecting shade;

FIGURE 2 is an end view, partly in section of the heater of FIGURE 1;

FIGURE 3 is a view of the front radiant face of one of the generators used in the heater of FIGURE 1;

FIGURE 4 is a sectional elevational view of the generator of FIGURE 3 taken along the line 4—4;

FIGURE 5 is a fragmentary sectional view of a generator normal to the tile exposed surface and to the direction of combustion product flow illustrating a modified construction; and

FIGURE 6 is a view similar to FIGURE 5 illustrating a further modification.

Referring now to the drawings in detail and particularly to FIGURE 1, the burner assembly 10 of the present invention comprises a pair of infrared generators 12 and 14 mounted within a generally rectangular frame 16 formed by an upper angle member 18 and a lower parallel angle member 20 interconnected by frame side members 22 and 24, the infrared generators 12 and 14 being rigidly secured at their top and bottoms to the angle members 18 and 20. A suitable hood 26 is secured to the frame 16 as shown in FIGURES 1 and 2.

Gaseous fuel is supplied to the infrared generators 12 and 14 through an inlet 28, a manual shutoff valve 30, a pressure regulator 32, a solenoid valve with automatic safety shutoff 34, a U-shaped conduit 36, and a manifold 38 to discharge nozzles or orifices 40 and 42 of identical construction, associated respectively with the infrared generators 12 and 14.

As is shown in FIGURES 1 and 2, a pilot orifice 44 is provided intermediate the generators 12 and 14 and is supplied with gaseous fuel through a conduit 46 and a pilot shutoff valve 48 from the inlet 28. A pilot safety thermocouple 50 is disposed within the normal path of the flame from the pilot 44 and is electrically connected in the circuit for operation of the solenoid valve 34 to prevent opening of the solenoid valve 34 in the event the pilot is not lighted.

The infrared generators 12 and 14 are of identical construction, the detailed construction of infrared generator 12 being shown in FIGURES 3 and 4. Infrared generator 12 is provided with a pressed metal housing 52 having a rear wall 54, a top wall 56, a bottom wall 58 and side walls 60 and 62. As is most clearly illustrated in FIGURE 4, the open front face of the housing 52 is closed by a perforated wall 64 formed by a plurality of through perforated ceramic tiles 66 constructed in accord with the teachings of said Schwank patent and supported in a ceramic frame 68 mounted on and within the walls 56–62 of the housing 52 as shown in FIGURE 4. A suitable heat resistant gasket 70 is interposed between the margin of the wall 64 and the ceramic frame.

As is shown in FIGURE 4, the nozzle 40 discharges gaseous fuel coaxially into a venturi tube 72 suitably fixed to the rear wall 54 of the generator housing 52 and into the inlet end 74 of which air from atmosphere is induced to flow due to the sub-atmospheric pressure existing at the inlet end 74 of the venturi tube 72 due to the flow of gaseous fuel therethrough from the nozzle 40 at relatively high velocity. The gaseous fuel and air flows through venturi tube 72 to its discharge end 76 from which it is directed against the center 78 of a flow dividing baffle 80 which splits the stream from the outlet end 76 of the venturi tube 72 and directs it toward the side walls 60 and 62 and for return flow toward the bottom end wall 58 of the housing 52 externally of the venturi tube 72. It is thus apparent that the perforated wall 64 cooperates with the rear wall 54, the side walls 60 and 62 and the top and bottom walls 56 and 58 of the housing 52 to define a plenum chamber 82 in which the intermixture of the gaseous fuel and air is completed prior to the passage of this completely combustible mixture of gaseous fuel and air through the perforations 84 of the ceramic tiles 66 to the combustion zone 87 at and adjacent the radiant surface 88 of the wall 64.

Mounted in front of the wall 88 at the outer fringe of the combustion zone 87 is a re-radiator means which, in the present embodiment, comprises a plurality of rods 90 extending vertically and parallel to the surface 88 and to each other. In the embodiment illustrated in FIGURES 3 and 4, rods 90 are of uniform circular cross section throughout their length and approximately ⅛ inch in diameter. Rods 90 are formed of a metal which will withstand a high heat intensity and must be of sufficient cross sectional area to prevent distortion thereof under their own weight at the elevated temperature at which they operate. At their lower ends, rods 90 each rest within a recess 92 formed in the face 94 of the ceramic tile frame 68 and extend at their upper ends into a similar recess 96 on the top portion of the frame 68. The lower ends of rod 90 are retained in recess 92 by a metal plate member 98 formed with a plurality of integral spacer fingers 100 projecting toward wall surface 88 as best shown in FIGURE 4 and a plurality of integral retainer fingers 102 extending parallel to the wall 88 as shown in FIGURE 4, one finger 102 being interposed between each pair of fingers 100. The lower end of rods 90 are received between a pair of the spacer fingers 100 and retained by the one of the fingers 102 with which it is in alignment and located between the two spacer fingers 100 between which it is interposed.

The rods 90 are retained within the recess 96 by a further plate member 104 having integral retainer fingers 106 separated by spacer fingers 108 of identical construction with fingers 102 and 100 respectively and cooperating with the upper ends of the rods 90 in the same manner. The plate member 98 is fixed to the housing 52 by mounting bolts 110 and 112 and the plate 104 is fixed to housing 52 by bolts 114 and 116 all extending through aligned apertures in the ceramic frame 68.

The overall length of the rods 90 at ambient temperature is sufficiently less than the spacing between the parallel end walls of recesses 92 and 96 that the rods 90 may expand freely longitudinally without restraint as they are fully heated to their normal operating temperature.

In their most usual construction, rods 90 as explained above are of uniform circular cross section. In operation when the rods 90 are heated to their visibly radiant operating temperature, which will be substantially above the normal temperature of the surface 88, the semi-cylindrical portions of the surface of rods 90 facing surface 88 will emit radiation toward the surface 88 to augment the normal heating effect upon the surface 88 of the combustion of the intermixed gaseous fuel and air at the zone 87 and at adjacent surface 88 to thereby heat the surface 88 substantially above the temperature to which it would be heated in the absence of the rods 90. In addition, the semi-cylindrical portions of the surfaces of the rods 90 remote from the surface 88 will also be heated to visible radiance and the radiation from these surface portions will augment the radiation from the surface 88 to produce a substantially greater heating effect upon an object to be heated.

The rods 90 may be of square cross section or of diamond shape cross section as illustrated at 90′ and 90″ in FIGURES 5 and 6 respectively with the diagonals thereof of maximum length extending substantially normal to the surface 88 to provide the maximum radiating surface from the rods 90′ or 90″ with minimum obstruction of the path of direct radiation from the surface 88.

The effectiveness of the rods 90 in increasing the effective radiant temperature of the surface 88 of the ceramic tile wall 64 has been demonstrated by actual tests in which identical generators with different numbers of rods were compared with an identical infrared generator without any such rods. All were operated simultaneously with the same size orifice 40 and the same gas supply. Readings of an optical pyrometer directed at the radiant surface 88 of each of the such burners showed that the generator having no rods 90 had a temperature at surface 88 of 1190° F., a generator as shown in FIGURES 3 and 4 equipped with six rods 90 having one rod for each inch of width of the generator radiant surface 88 transversely of the direction of the flow of the exhaust gases from the combustion zone 87 had a temperature of 1320° F., a generator of the construction shown in FIGURES 3 and 4 but equipped with twelve rods providing two rods per inch of width transversely of the direction of flow of the products of combustion from the combustion zone 87 produced a temperature at the

surface 88 or 1400° F., and a generator constructed in accord with FIGURES 3 and 4 but equipped with twenty of the rods 90 uniformly spaced transversely of the direction flow of the combustion products from the zone 87 resulted in a temperature at the surface 88 of 1500° F.

As has been indicated, surface 88 preferably lies in a vertical plane, and the rods 90 extend vertically so that the combustion products can flow upwardly from the combustion zone 87 between the rods 90 into the surrounding atmosphere without any inhibiting action of transversely extending portions of the re-radiator as is inherent in prior art screen constructions. If the infrared generator 12 must be installed in some position other than one in which its surface 88 is vertical, it should be arranged so that the recess 96 is above the level of the recess 92 and so that the parallel end walls of these recesses are horizontal or substantially horizontal. As so arranged, the rods 90 will lie parallel to the direction of normal upward flow of the combustion products from the zone 88. This results in minimum inhibiting effect upon the normal upward flow of the combustion products.

The invention may be embodied in other specific forms without departing from the spirit or essential characteristics thereof. The present embodiments are therefore to be considered in all respects as illustrative and not restrictive, the scope of the invention being indicated by the appended claim rather than by the foregoing description, and all changes which come within the meaning and range of equivalency of the claims are therefore intended to be embraced therein.

What is claimed and desired to be secured by United States Letters Patent is:

1. In a radiant heater, a chamber, one face of which is of ceramic plate material having a large number of small perforations through its thickness and the remaining walls of which are formed by a metal housing supporting said ceramic plate material means to introduce a combustible gaseous mixture into said chamber under pressure above that of the atmosphere, means to ignite said mixture as it flows through said perforations so that it burns in a narrow zone adjacent to the outer surface of said plate, a ceramic frame mounted on said housing and surrounding the plate and having ledges at its upper and lower sides, said ledges supporting a plurality of rods adjacent to their ends and serving to maintain said rods in thermal isolation from said metal housing and parallel to the outer surface of the plate at a distance therefrom approximately equal to the thickness of the aforesaid zone, abutments on the ledges outside of the ends of the rods, the distance between the opposing abutments being greater than the length of the rods to permit their expansion when heated, and clamps attached to said ledges to hold said rods in position, said clamps having fingers which locate the rods in position with approximately uniform spacing, parallel to each other and perpendicular to said abutments.

2. In combination with a gas burning infra-red generator having a surface adapted to be heated to visible radiance by the combustion of a fully cobustible mixture of intermixed gaseous fuel and air in a combustion zone at and adjacent said surface, means disposed closely adjacent said surface and adapted to withstand heating to a temperature higher than that of said surface without deformation, said means being operative during operation of said generator to emit radiation toward and from said surface to thereby augment the heating effect of the combustion of said mixture on said surface and the heating effect of radiation from said surface upon an object to be heated, said means comprising a plurality of rods mounted in spaced parallel relation to said surface and extending longitudinally between upper and lower spaced apart end regions of said surface, said rods being uniformly spaced transversely of the direction of flow of the exhaust gases from said combustion zone, the number and cross-sectional dimensions of said rods transversely of the direction of the flow of exhaust gases from said combustion zone being such that the projected area of said rods on said surface is in the order of between one-half and one-eigth of the area of said surface, there being an average of 3.3 rods per inch of width of said surface transversely of the direction of flow of exhaust gases from said zone.

3. In a radiant heater, a chamber, one face of which is of ceramic plate material having a large number of small perforations through its thickness and the remaining walls of which are formed by a metal housing supporting said ceramic plate material, means for introducing a combustible gaseous mixture into said chamber at super-atmospheric pressure, means for igniting said mixture as it flows through said perforations so that it burns in a narrow zone adjacent the outer surface of said plate material, a ceramic frame mounted on said housing and surrounding and supporting said plate material, a plurality of rods, first means on said frame supporting said rods adjacent their ends and maintaining said rods in parallel spaced relation to said outer surface of said plate material and in thermal isolation from said metal housing to prevent heat leakage to said housing, second means on said frame cooperating with said first means permitting limited axially unrestrained expansion of said rods when heated, and clamping and positioning bracket means attached to said frame and having portions to hold and locate said rods in uniformly parallel spaced apart positions but permitting axial expansion thereof when heated.

4. The combination defined in claim 3 wherein said rods are all metal.

References Cited in the file of this patent

UNITED STATES PATENTS

815,409	Cummings	Mar. 20, 1906
2,594,914	Grosskloss	Apr. 29, 1952

FOREIGN PATENTS

560,337	Belgium	Sept. 14, 1957
744,980	Great Britain	Feb. 15, 1956