No. 812,105. PATENTED FEB. 6, 1906.

F. WETZLER & M. ORNSTEIN.

ADVERTISING PROJECTING APPARATUS.

APPLICATION FILED APR. 17, 1905.

2 SHEETS—SHEET 1.

Fig. 2.

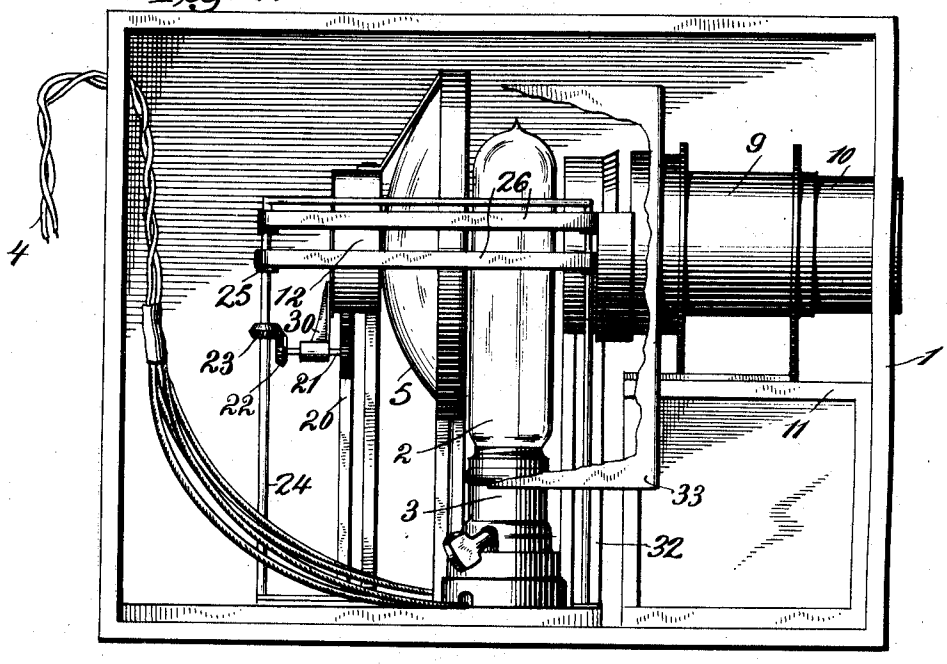

Fig. 1.

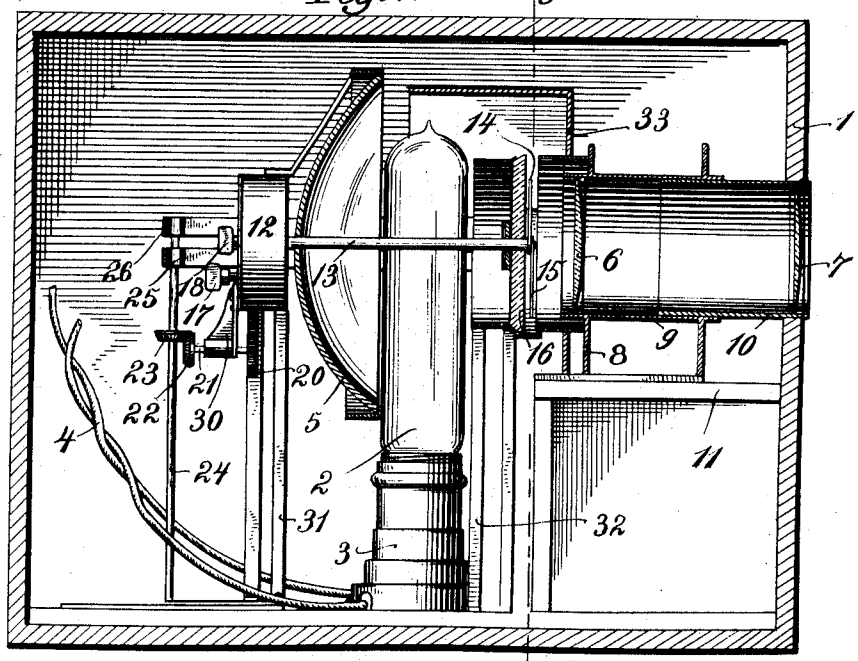

Witnesses
James J. Duhamel.
W. M. Kuehne

Inventors
Ferdinand Wetzler
Max Ornstein

By their Attorneys
Richards & Co.

No. 812,105. PATENTED FEB. 6, 1906.

F. WETZLER & M. ORNSTEIN.

ADVERTISING PROJECTING APPARATUS.

APPLICATION FILED APR. 17, 1905.

2 SHEETS—SHEET 2.

Fig. 3.

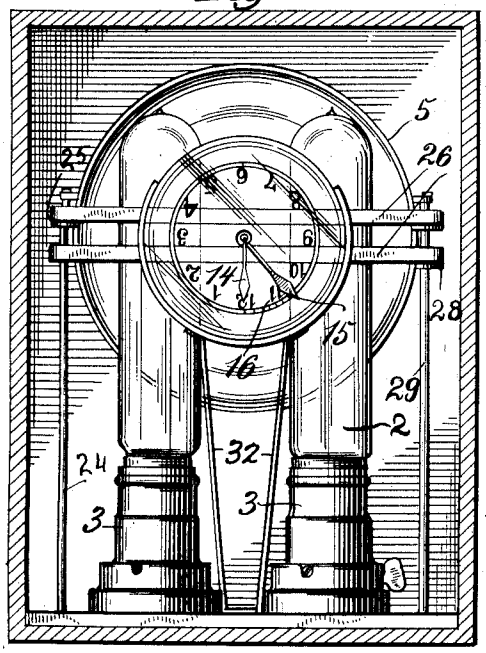

Fig. 4.

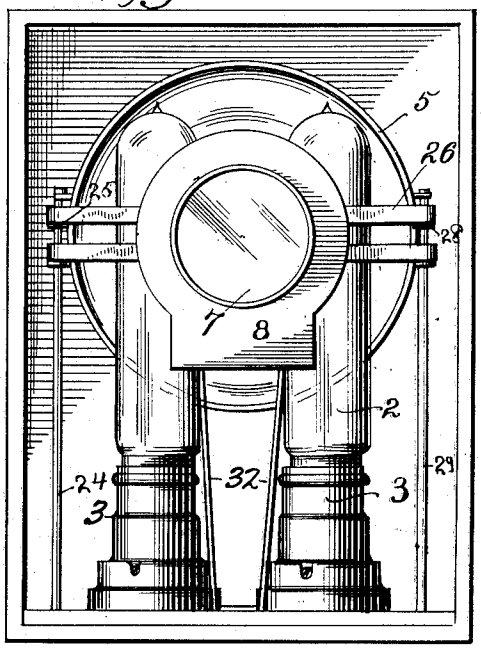

Fig. 5.

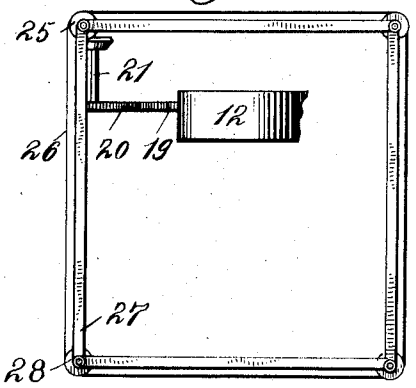

Witnesses
J. F. Duhamel.
H. M. Kuehne

Inventors
Ferdinand Wetzler
Max Ornstein
By their Attorneys
Richards & Co

UNITED STATES PATENT OFFICE.

FERDINAND WETZLER AND MAX ORNSTEIN, OF NEW YORK, N. Y.

ADVERTISING PROJECTING APPARATUS.

No. 812,105. Specification of Letters Patent. Patented Feb. 6, 1906.

Application filed April 17, 1905. Serial No. 256,170.

To all whom it may concern:

Be it known that we, FERDINAND WETZLER and MAX ORNSTEIN, citizens of the United States, residing at New York, N. Y., have invented new and useful Improvements in Advertising Projecting Apparatus, of which the following is a specification.

This invention relates to advertising projecting apparatus, and relates especially to apparatus of this character comprising indicating-belts or other movable indicating means which are superimposed by projection upon the image of a clock-dial or the like.

In the accompanying drawings, showing an illustrative embodiment of this invention, and in which the same reference-numeral refers to similar parts in the several figures, Figure 1 is a vertical sectional view. Fig. 2 is a similar side view, the box being open. Fig. 3 is a transverse section substantially on the line 3 3 of Fig. 1. Fig. 4 is a front view with the box open. Fig. 5 is a detail plan view.

In the illustrative embodiment of this invention, 1 is a box or containing casing of suitable character within which the projecting apparatus may be mounted. As indicated, this apparatus may comprise the usual parabolic reflector 5, in front of which any desired source of illumination may be used, indicated in this instance as composed of the incandescent lights 2, each of which is mounted in a suitable socket 3 and receiving current from the flexible wires 4, passing out of the casing, so as to give the apparatus a readily-portable character. Upon the standard 11 is mounted the bracket 8, carrying the barrel 9, in which is mounted the rear lens 6. The lens-tube 10 is slidingly mounted within this barrel to give the usual adjustment and carries the front lens 7. A suitable shield 33 is arranged adjacent the rear lens to cut off any undesirable light-rays, although of course these projecting elements may be of other form, if desired.

The clock mechanism 12 may be supported by the standards 31 and may assist in supporting the reflector 5, as indicated. This clock mechanism may comprise the winding and setting keys 17 18. The clock-dial 16 is made of transparent material, such as glass, and is supported upon the standards 32 at the focus of the lenses. The hands 14 15 are mounted adjacent this dial and are operated by the tubular shafts 13, extending forward from the clock mechanism 12. In this way the clock-face is projected and indicates the time upon the projecting-screen. Other desired indicating means are arranged adjacent the clock-dial, so as to be superimposed by projection thereupon. As indicated, a plurality of indicating-belts 26 are mounted upon suitable rolls 25 28, which are supported on the vertical shafts 24 29, these shafts having, as indicated in Fig. 5, their upper ends arranged in suitable bearings in the light-framework 27, so that the continuous belts travel adjacent the clock-dial or other indicating means. These indicating-belts may be operated in any desired way, and, as shown, their operation is secured by connecting them with the clock mechanism. The train of gears 19 is operated by the clock mechanism and engages the gear 20, fast on the shaft 21. This shaft, which runs in the brackets 30, (see Fig. 1,) carries at its outer end the bevel-gear 22. This gear meshes with the bevel-gear 23 on the driving-shaft 24 for operating the indicating-belts through the rolls 25. In this way the indicating-belts, which of course may be formed in this instance of transparent material and may carry any desired indications or advertising matter, are moved either continuously or intermittently across the clock-dial and form in connection therewith a desirable advertisement upon the projecting-screen.

Without being limited to the details of construction and operation of the described embodiment of this invention, which is of course merely illustrative of a single form of this apparatus, what is claimed as new, and what it is desired to secure by Letters Patent, is set forth in the appended claim:

An advertising apparatus consisting of a portable box, a reflector and projecting-lenses mounted therein, electric lights placed between said lenses and the reflector, a clock-

work located to the rear of the reflector, a transparent dial located to the rear of the lenses in front of the lights, hands mounted on said dial, a connection from said hands to the clockwork, shafts, rolls mounted thereon, means for rotating one of the shafts from the clockwork and a plurality of indicating-belts mounted on said rolls and arranged to pass adjacent the dial, substantially as described.

In testimony whereof we have signed our names to this specification in the presence of two subscribing witnesses.

FERDINAND WETZLER.
MAX ORNSTEIN.

Witnesses:
OTTO SMURK,
H. M. KUEHUE.