Dec. 15, 1964 R. A. WORRELL 3,160,970

STORAGE BATTERY CONTAINER

Filed May 25, 1962

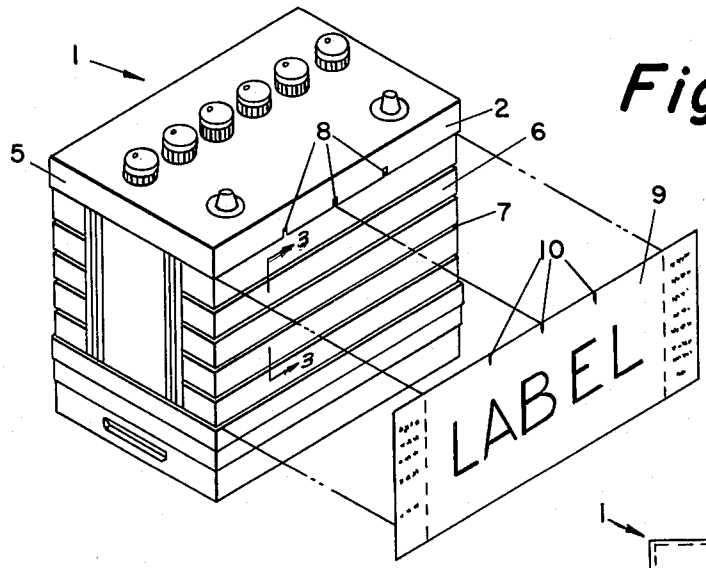

Fig. 1

Fig. 2

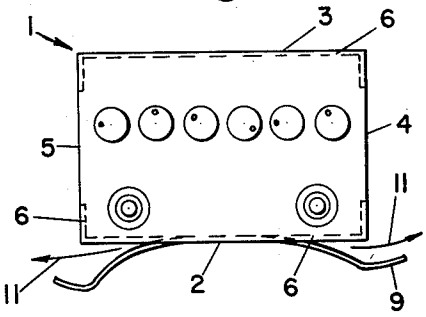

Fig. 3

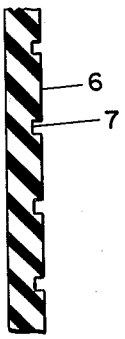

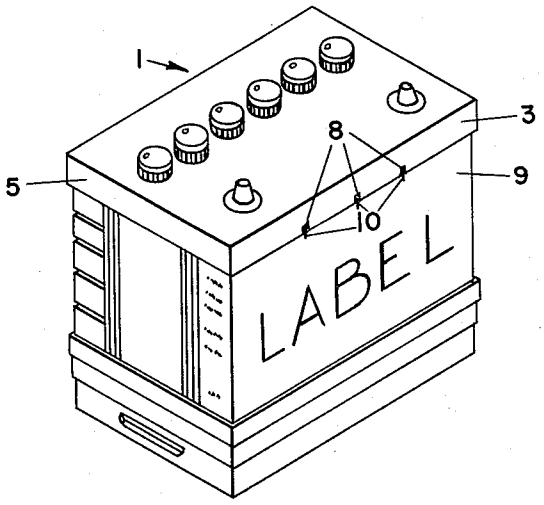

Fig. 4

United States Patent Office 3,160,970 Patented Dec. 15, 1964

3,160,970

STORAGE BATTERY CONTAINER

Roger A. Worrell, Fullerton, Calif., assignor to The Electric Storage Battery Company, a corporation of New Jersey

Filed May 25, 1962, Ser. No. 197,729
2 Claims. (Cl. 40—2.2)

The present invention generally relates to labeled storage batteries. More specifically, the present invention is concerned with a new and novel combination of a storage battery container and a label therefor.

Storage battery containers are generally molded of hard rubber or other similar non-conductive material and are provided with brand identification, capacity, and other pertinent information by means of suitable indicia molded therein. For eye appeal and to make such information more readily discernible such indicia are usually roll painted to provide contrast with the container. This not only requires costly painting equipment and intricate container molds, but also necessitates the use of a different container for each specific brand and type of battery produced. This adds to the cost of battery containers and, in addition, necessitates high container inventory. The use of adhesive labels has heretofore been suggested, but this has proven generally to be unsatisfactory due to the inability of most labels to withstand the corrosive environments which surround batteries in their operation, the labor required to apply the label and has generally not provided for uniformity of product. In addition, the problem of uniform application of adhesive labels to batteries is more difficult when it is desired to extend the label to more than one side of a battery container, due to the entrapment of air between the label and the container. This problem is further complicated when the label is made impermeable to air with an electrolyte resistant coating.

In accordance with the present invention an inwardly recessed label receiving surface is provided along at least a part of one side and a portion of at least one of the ends of the container. This label receiving surface has a plurality of grooves spaced one from the other extending lengthwise along the one side of the battery and extending along the part of the ends of the battery container. These grooves provide channels for a flow of air trapped behind the label outwardly from the label receiving surface, thereby permitting an adhesive label to be secured to the label receiving surface with a minimum of distortion due to air entrapped between the label and the container. The battery container is also provided with at least one distinctive marking means adjacent to the label receiving surface for symmetrically locating the label on said surface, thereby facilitating the rapid and uniform attaching of the label to the container. An adhesive label is secured to the whole of the label receiving surface including said side and portion of the ends of the battery and has on its exposed surface a coating resistant to attack by battery electrolyte. Since the entire label receiving surface is recessed the resistance of the label due to abrasion and contact with adjacent equipment is minimized.

A better understanding of the present invention may be had from the following description when read with reference to the accompanying drawings of which:

FIG. 1 is a perspective view of a battery container and label therefor prior to the application of the label to the container;

FIG. 2 is a top elevation of the battery of FIG. 1 with the label partially applied;

FIG. 3 is a fragmentary cross-sectional view taken along the line 3—3 of FIG. 1 showing the channels provided in the label receiving surface of the battery; and

FIG. 4 is a perspective view of the battery of FIG. 1 with the label applied thereto.

Referring now to the drawings, the numeral 1 generally designates a rectangular battery container of hard rubber or other similar non-conductive material dimensioned to receive a conventional automotive type storage battery. As shown the container 1 has sides 2 and 3 and ends 4 and 5. The conventional details of the container 1 are for illustrative purposes, since the present invention is concerned only with the side walls 2 and 3 and ends 4 and 5 and to details thereof pertinent to the application of an adhesive label thereto. The side walls 2 and 3 of the container 1 and portions of the end walls 4 and 5 are provided with recessed label receiving surfaces 6 which, in the embodiment of the present invention illustrated, extend along the lengths of both side walls 2 and 3 and fractional portions of both end walls 4 and 5. It should be understood, however, that in accordance with the present invention that the recessed label receiving surfaces 6 need not extend over the entire lengths of the sides of the batteries and to fractional portions of both ends 4 and 5 provided that they extend continuously along a portion of one side wall and a fractional portion of one end. Still further, in the embodiment of the present invention illustrated, it should be noted that the label receiving surfaces 6 are symmetrically arranged on both halves of the battery container and thus for labeling purposes it is not necessary that the battery be oriented in any particular direction.

The label receiving surface 6 is provided with a plurality of grooves spaced from one another which extend the length of the label receiving surface including the continuing parts on the adjacent end of the surfaces. The grooves 7 provide channels for the flow of air that would otherwise become trapped behind a label outwardly from the surface 6. The battery container 1 has distinctive marking means 8 adjacent to said label receiving surface 6 to aid in symmetrically locating the label on said label receiving surface 6. While these distinctive marking means 8 are shown, it should be understood that one may be sufficient for most applications, and it may most advantageously be located adjacent to the center of the label receiving surface 6.

The numeral 9 designates a label adapted to be adhesively applied to the label receiving surface 6. The label 9 has on the exposed surface a coating resistant to attack by a battery electrolyte and on its rear surface an adhesive for affixing it to the container 1. A thin layer of vinyl resin applied either by means of a spray or a unitary layer has been found to be completely satisfactory for protecting the exposed surface of labels for automotive type batteries from attack by electrolyte. The label 9 in addition to its distinctive indicia of brand, performance characteristics, quality and the like, also has a distinctive marking or markings 10 adapted to coincide with the distinctive marking or markings 8 on the container 1 upon the application of the label to the label receiving surface 6, thereby insuring the symmetrical location of the label on the label receiving surface.

Referring specifically now to FIG. 2, there is shown a top elevation of a battery in accordance with the present invention with the label 9 partially applied to the label receiving surface 6. As shown, the label 9 has been secured to the label receiving surface 6 at its mid-point with the distinctive markings 8 and 10 on the container and label respectively coinciding and is then progressively adhesively fastened to the surface 6 from its mid-point outward toward the ends 4 and 5 with any air trapped behind the label being free to escape through the channels 7 as illustrated diagrammatically by means of the arrows 11 in FIG. 2. Once the label is completely secured to the label receiving surface on the side 2 of the battery,

the portions of the label adapted to wrap around and be affixed to the ends of the battery 4 and 5 may be secured with a continuing sweeping motion along the surface of the label 9. As shown in FIG. 4 wherein the battery is illustrated with the label applied, the label is completely recessed in the label receiving surface 6 and thus, is protected from tearing and ripping by contact with adjacent equipment. Because of the distinctive marking means 8 and 10 on the container and the label, the ends of the label will coincide effectively with the recessed label receiving surface and the presence of the grooves 7 assure that the outer surface of the label 9 will be free of air pockets and distortion due to air trapped between the label and the container 1. Accordingly, it can be seen that by means of the present invention there is provided a means for assuring the uniform and symmetrical application of labels to storage batteries.

Having described the present invention, that which is claimed as new is:

1. A storage battery container comprising a casing having two substantially identical side walls and two substantially identical end walls, two recessed label receiving surfaces extending along at least a part of one side wall and a portion of an adjacent end wall, said label receiving surfaces having a plurality of grooves spaced from one another and extending along substantially the entire length of said label receiving surfaces, and at least one of said label receiving surfaces having adhesively secured thereto a label having on its exposed surface a coating resistant to attack by battery electrolyte, said label covering substantially all of the label receiving surface to which it is attached.

2. A storage battery container comprising a casing having two substantially identical side walls and two substantially identical end walls, two substantially identical recessed label receiving surfaces extending the entire length of each side wall and a portion of both end walls, said label receiving surfaces having a plurality of horizontal grooves spaced from one another and extending along substantially the entire length of said label receiving surfaces, and at least one of said label receiving surfaces having adhesively secured thereto a label having on its exposed surface a coating resistant to attack by battery electrolyte, said label covering substantially all of the label receiving surface to which it is attached.

References Cited by the Examiner

UNITED STATES PATENTS

688,302	12/01	Grether	156—87
1,611,330	12/26	Bird	161—123 X
2,093,583	9/37	Upton	40—22
2,098,557	11/37	Thomas	40—22
2,264,628	12/41	Engert.	
2,267,721	12/41	Elmendorf	156—87
2,847,775	8/58	Darr	40—2.2

FOREIGN PATENTS

276,178	8/27	Great Britain.

JEROME SCHNALL, *Primary Examiner.*

J. R. SPECK, *Examiner.*