Nov. 19, 1963 A. C. HOVEN ETAL 3,111,344

CHAIR

Filed Feb. 5, 1962 3 Sheets-Sheet 1

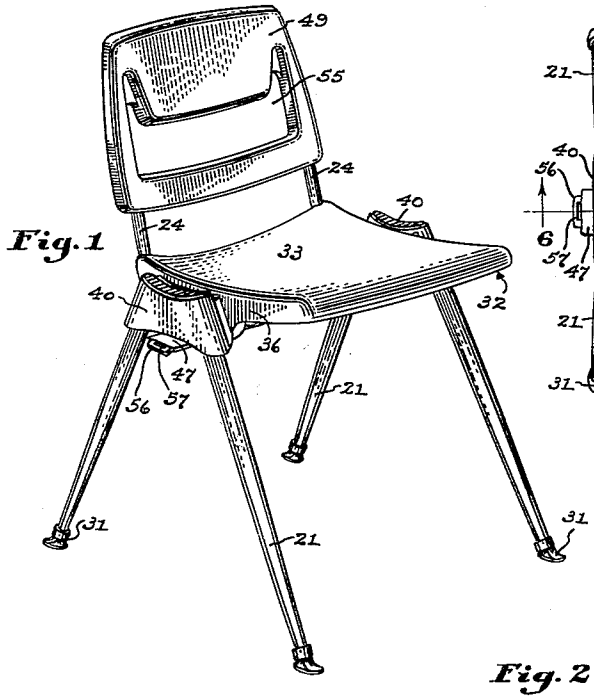

Fig. 1

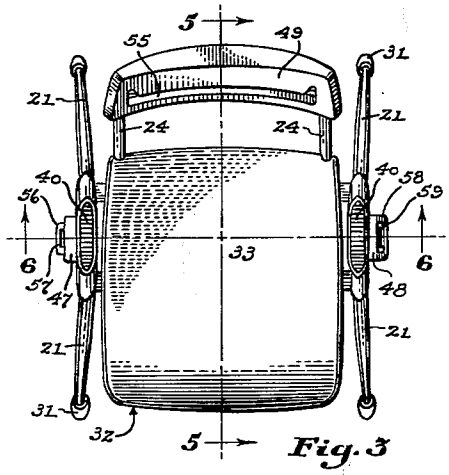

Fig. 3

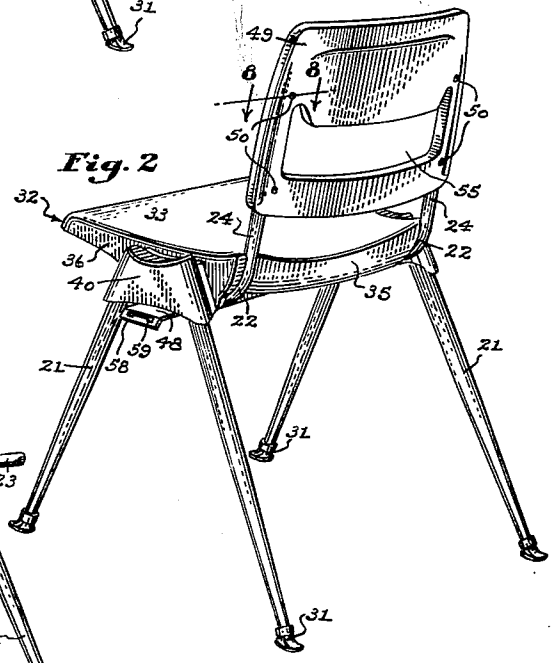

Fig. 2

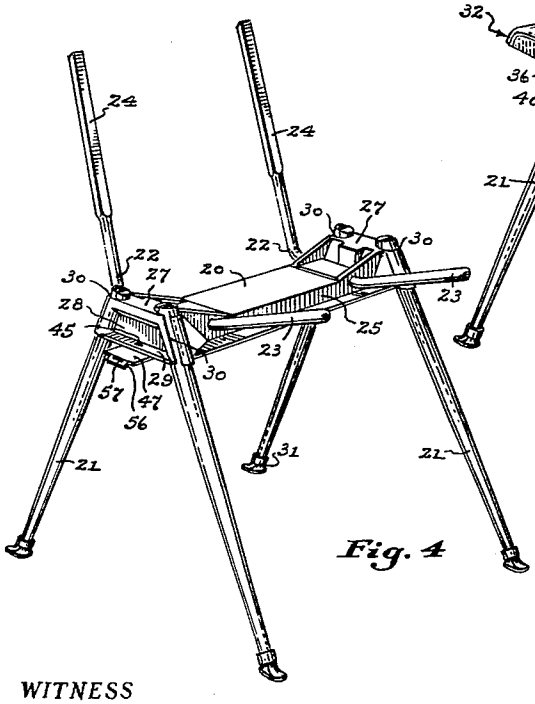

Fig. 4

INVENTORS
Alfred C. Hoven
Walter E. Nordmark
Gerald F. Thompson

BY John S. Braddock

ATTORNEY

WITNESS
Harry S. Brown Jr.

Nov. 19, 1963 A. C. HOVEN ETAL 3,111,344

CHAIR

Filed Feb. 5, 1962 3 Sheets-Sheet 2

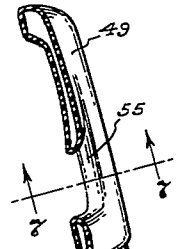

Fig. 5

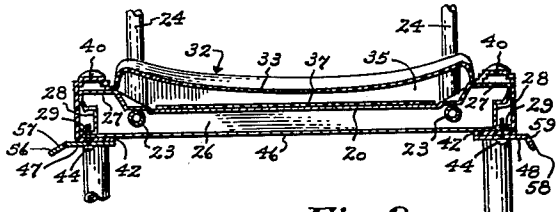

Fig. 6

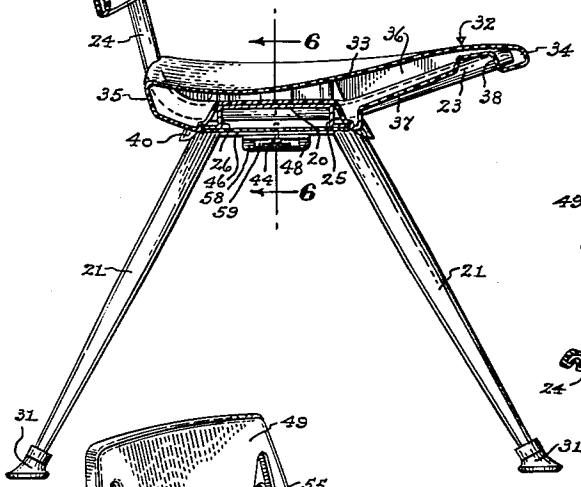

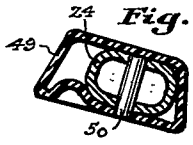

Fig. 8



Fig. 7

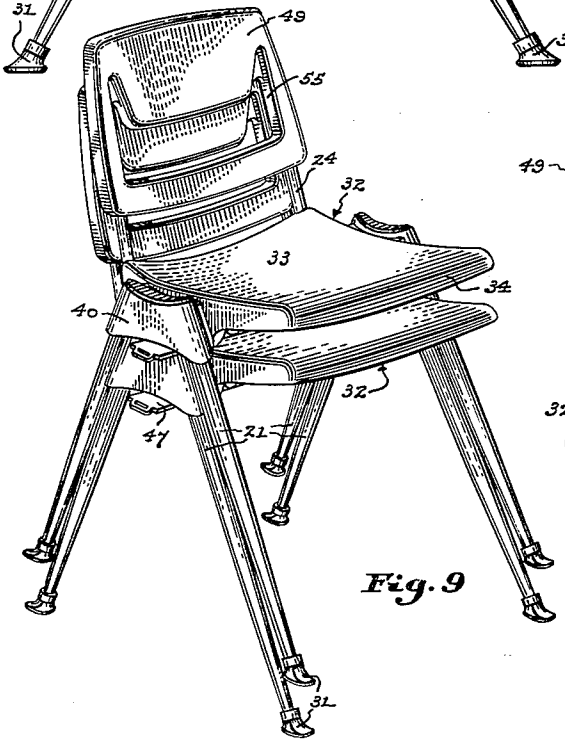

Fig. 9

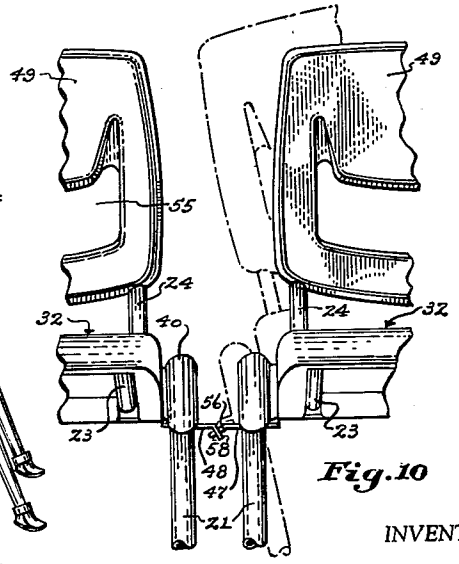

Fig. 10

INVENTORS

Alfred C. Hoven
Walter E. Nordmark
Gerald F. Thompson

BY John S. Braddock

ATTORNEY

WITNESS

Harry S. Brown Jr.

Nov. 19, 1963 A. C. HOVEN ETAL 3,111,344

CHAIR

Filed Feb. 5, 1962 3 Sheets-Sheet 3

Fig. 11

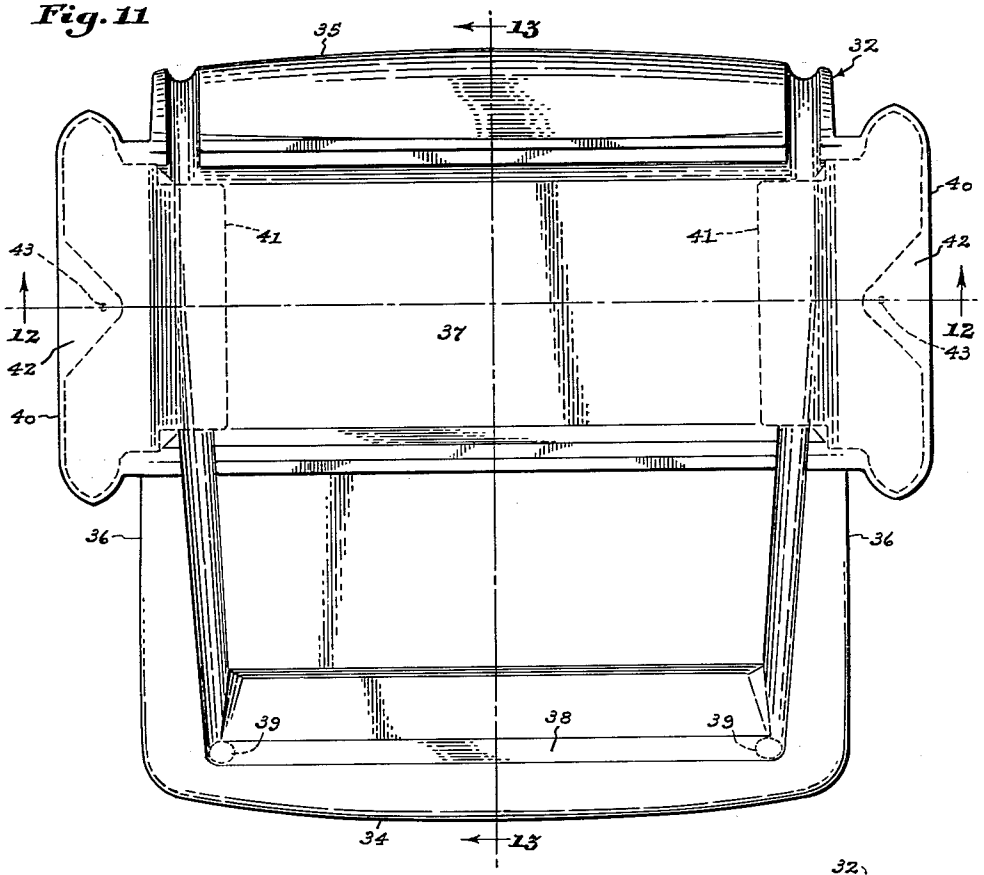

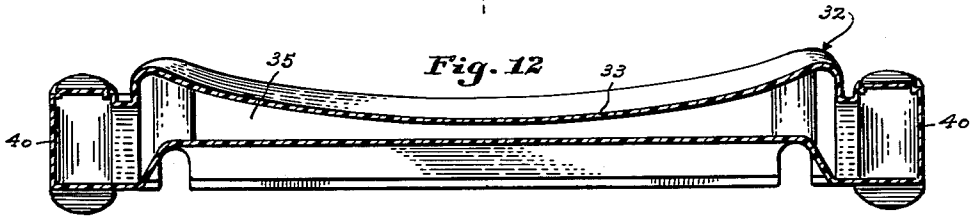

Fig. 12

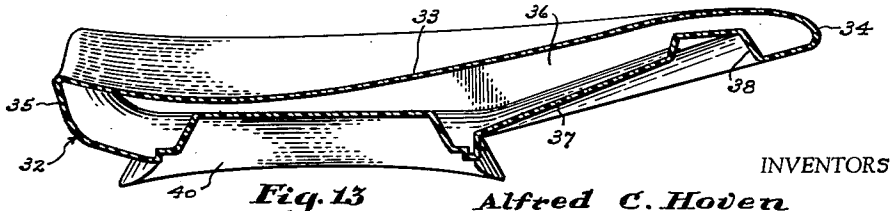

Fig. 13

INVENTORS

Alfred C. Hoven
Walter E. Nordmark
Gerald F. Thompson

WITNESS

Harry S. Brown Jr

BY John S. Braddock

ATTORNEY

United States Patent Office 3,111,344 Patented Nov. 19, 1963

3,111,344
CHAIR

Alfred C. Hoven, Walter E. Nordmark, and Gerald F. Thompson, Grand Rapids, Mich., assignors to American Seating Company, Grand Rapids, Mich., a corporation of New Jersey

Filed Feb. 5, 1962, Ser. No. 170,911
14 Claims. (Cl. 297—452)

The present invention relates to chairs.

The primary objects of the invention are to provide a chair of novel construction in which the chair seat and chair back are of hollow, blow-molded, resilient plastic construction, whereby these parts can quickly and easily be assembled to a prefabricated steel frame to provide a completed chair which is simple and economical in construction and attractive in appearance, and to provide such a chair so designed and constructed that it can be stacked with other chairs of its kind when not in use and joined to other chairs of its kind to form a row of chairs when in use.

An illustrative embodiment of the invention is shown in the accompanying drawing, wherein:

FIGURE 1 is a front and side perspective view of the new chair;

FIGURE 2 is a rear and side perspective view of the same;

FIGURE 3 is a top plan view thereof;

FIGURE 4 is a perspective view of the metal frame of the chair;

FIGURE 5 is an enlarged central vertical sectional view of the chair taken on line 5—5 of FIGURE 3;

FIGURE 6 is a fragmentary vertical sectional view of parts of the chair, taken on lines 6—6 of FIGURES 3 and 5;

FIGURE 7 is a sectional view of the chair back taken on line 7—7 of FIGURE 5;

FIGURE 8 is an enlarged fragmentary sectional view of parts of the chair back taken on line 8—8 of FIGURE 2;

FIGURE 9 is a front and side perspective view of two of the new chairs in stacked relation;

FIGURE 10 is a fragmentary front elevational view of two of the new chairs in side-by-side joined relation;

FIGURE 11 is a bottom plan view of the blow-molded chair seat prior to removal of certain areas thereof to form the finished seat, said areas being indicated by dotted lines in this view;

FIGURE 12 is a vertical sectional view of the same taken on line 12—12 of FIGURE 11; and

FIGURE 13 is a vertical sectional view of the same taken on line 13—13 of FIGURE 11.

Referring now in detail to these drawings, and referring first particularly to FIGURE 4, the chair frame there shown generally comprises a sheet metal mounting bracket 20, pairs of tubular metal chair legs 21, and a pair of L-shaped tubular metal braces 22 which have lower forwardly-rearwardly extending seat supports 23 and back supports 24 extending upwardly from the rearward ends of the seat supports. The mounting bracket 20 extends transversely of the chair and is of hat section in its middle portion thus to provide an upright front wall 25 and an upright rear wall 26. These walls 25, 26 have pairs of forwardly-rearwardly aligned openings therein through which project the seat supports 23 beyond the mounting bracket 20 both forwardly and rearwardly, and the seat supports 23 are desirably welded to the mounting bracket.

The terminal portions of the mounting bracket 20 are formed outwardly-upwardly at 27, then inwardly and downwardly at 28, and finally outwardly to form ledges 29 for the attachment of the chair seat. The outer forward and rearward flanges of the mounting bracket 20 are curled to form downwardly divergent socket elements 30 in which are secured as by welding the upper ends of the downwardly divergent pairs of chair legs 21. The lower ends of the chair legs 21 may be provided with suitable glides 31 as shown.

The chair has a hollow, blow-molded, resilient plastic chair seat generally designated 32. This seat is blow-molded in much the same manner as the familiar squeeze bottles in use today. A tube of plastic material in a semi-fluid state is clamped between a pair of female mold dies, one of which has needle-like nozzles which pierce the material and through which air is injected to inflate the tube until all parts thereof are pressed against the inner walls of the mold. After curing, the chair seat, which is desirably molded of a plastic material such as polyethylene, possesses high integrity and because of its hollowness a considerable degree of resilience which makes for comfort in the chair.

The chair seat 32 is shown in the solid lines of FIGURES 11–13 in the state in which it comes from the mold. The dotted lines in FIGURE 11 indicate portions which are subsequently cut away to complete the chair seat. The seat comprises a top wall 33 which is contoured for sitting comfort, a front wall 34 and rear wall 35, side walls 36 and a bottom wall 37. The bottom wall 37 is molded to conform with the mounting bracket 20 and the rearward portions of the seat supports 23, and to provide near the front of the seat an upright wall 38 in which are cut apertures 39 through which extend the forward ends of the seat supports 23 into the interior of the hollow seat.

Housings 40 are molded on opposite sides of the seat. After cutting away the areas of the bottom wall 37 which are designated 41 in FIGURE 11, the chair seat 32 can be applied to the metal frame, and the housings 40 conform to and enclose the socket elements 30 and the upper ends of the chair legs. Tabs 42 which remain on the chair seat after the areas 41 are cut away register with ledges 29 on the mounting bracket 20 and have apertures 43 through which screws 44 pass upwardly into threaded engagement in tapped holes 45 in the ledges 29, thus to securely fasten the chair seat to the metal frame. Screws 44 also secure a reinforcement panel 46, and chair-connecting members 47, 48 which will be fully described hereinafter, to the mounting bracket 20.

A hollow, blow-molded, resilient plastic chair back 49 has apertures cut in its bottom wall through which project the back supports 24 upwardly into the interior of the chair back 49 for the support thereof. The upper end portions of the tubular metal back supports 24 are flattened so as to provide a snug fit thereof within the hollow chair back (see FIGURE 8). Pins 50 which may be of a plastic material such as nylon, are press-fit into aligned apertures 51 in the rear wall 52 of the chair back and aligned apertures 53, 54 in the back supports 24 to securely fasten the chair back to the back supports. The chair back 49 is molded with a void 55 therein as shown, which lends added resilience to the upper part of the back.

It will be seen that the pairs of chair legs are disposed laterally outwardly from the main body of the seat so that the chairs can be stacked as illustrated in FIGURE 9. FIGURE 10 shows a pair of the chairs connected together in side-by-side relation. The chair-connecting member 47 on the right hand side of each chair has an outwardly-downwardly extending tongue 56 provided with a slot 57 therein. The chair-connecting member 48 on the left side of each chair has an outwardly-downwardly extending flange 58 provided with an inverted U-shaped opening 59 therethrough. It will be seen that if one chair is tipped as illustrated in broken lines in FIG-

URE 10, the tongue 56 on its member 47 can readily be inserted through the opening 59 in the member 48 on the other chair, and when the tipped chair is again lowered to the floor the slot 57 on tongue 56 hooks over the part of flange 58 lying between the legs of the inverted U-shaped opening 59 thus to connect the chairs.

It will thus be seen that the invention provides a chair having many novel features, and while but one specific embodiment of the invention has been herein shown and described it will be understood that numerous details thereof may be altered or omitted without departing from the spirit of the invention as the same is defined by the following claims.

We claim:

1. In a chair: a supporting frame; and an integral, hollow resilient plastic chair seat mounted on the frame.

2. In a chair: a supporting frame; and an integral, hollow, resilient plastic chair back mounted on the frame.

3. In a chair: a supporting frame; an integral, hollow, blow-molded, resilient plastic chair seat mounted on the frame; and a separate, integral, hollow, blow-molded, resilient plastic chair back mounted on the frame.

4. In a chair:

a mounting bracket extending transversely of the chair;

pairs of downwardly divergent chair legs secured to and depending from said mounting bracket at opposite sides of the chair;

a pair of L-shaped braces secured to said mounting bracket and providing forwardly-rearwardly extending seat supports and back supports extending upwardly from the rear ends of the seat supports;

an integral, hollow resilient plastic chair seat mounted on said seat supports; and

an integral, hollow resilient plastic chair back mounted on said back supports.

5. A chair according to claim 4 in which the chair legs are disposed laterally outwardly from the main body of the seat whereby the chair can be stacked on a similar chair.

6. A chair according to claim 5 in which the chair seat has housings molded on the opposite sides thereof which conform to and enclose the upper ends of said chair legs.

7. A chair according to claim 4 in which the chair seat and chair back are separately blow-molded.

8. A chair according to claim 4 in which the hollow chair back has apertures in its bottom wall through which project the back supports upwardly into the interior of the chair back for the support thereof.

9. A chair according to claim 8 in which plastic pins are inserted through aligned apertures in the chair back's rear wall and in the back supports for securing the chair back to said back supports.

10. A chair according to claim 4 in which the transverse mounting bracket has spaced upright front and rear walls having pairs of forwardly-rearwardly aligned apertures near opposite sides of the chair through which project the seat supports.

11. A chair according to claim 4 in which the transverse mounting bracket extends laterally outwardly beyond the main body of the seat and terminates in a pair of downwardly divergent socket elements at opposite sides of the chair in which are secured the upper ends of said pairs of downwardly divergent chair legs.

12. A chair according to claim 11 in which the chair seat has housings molded on the opposite sides thereof which conform to and enclose said socket elements and the upper ends of said chair legs.

13. A chair according to claim 4 in which the bottom wall of the chair seat is molded to conform with the mounting bracket and the rearward portions of said seat supports and to provide an upright wall near the front thereof having apertures therein through which project the forward ends of the seat supports into the interior of the hollow seat.

14. In a chair:

a mounting bracket extending transversely of the chair and having upright front and rear walls, said bracket terminating at each of the opposite sides of the chair in a pair of downwardly divergent socket elements and having pairs of forwardly-rearwardly aligned openings in its front and rear walls spaced inwardly from the pairs of socket elements at opposite sides of the chair;

pairs of downwardly divergent chair legs at opposite sides of the chair having their upper ends secured in said socket elements;

a pair of L-shaped braces having forwardly-rearwardly extending seat supports projected through said pairs of aligned openings respectively and extending forwardly and rearwardly beyond the mounting bracket, and having back supports extending upwardly from the rearward ends of said forwardly-rearwardly extending portions;

a hollow, blow-molded, resilient plastic chair seat having a bottom wall molded to conform with the mounting bracket and the rearward portions of said seat supports and to provide an upright wall near the front thereof having apertures therein through which project the forward ends of said seat supports into the interior of the hollow seat, said seat also having housings molded on the opposite sides thereof which conform to and enclose said socket elements and the upper ends of said chair legs; fastening means securing the seat to the mounting bracket at opposite sides of the chair; and

a hollow, blow-molded, resilient plastic chair back having apertures in its bottom wall through which project said back supports upwardly into the interior of the chair back for the support thereof.

References Cited in the file of this patent

UNITED STATES PATENTS

2,410,727	Furbish	Nov. 5, 1946
2,514,685	Virtue	July 11, 1950
2,658,563	Nordmark	Nov. 10, 1953
2,764,228	Donohue	Sept. 25, 1956
2,847,062	Henrikson et al.	Aug. 12, 1958
2,956,618	Eames et al.	Oct. 18, 1960
2,999,662	Lappin et al.	Sept. 12, 1961
3,003,187	Schaich	Oct. 10, 1961
3,018,131	Krueger	Jan. 23, 1962
3,025,105	Nash	Mar. 13, 1962
3,041,107	Shaefer	June 26, 1962