Nov. 22, 1932. J. ERICKSON 1,888,793

WRENCH

Filed Nov. 28, 1930

Fig. 1.

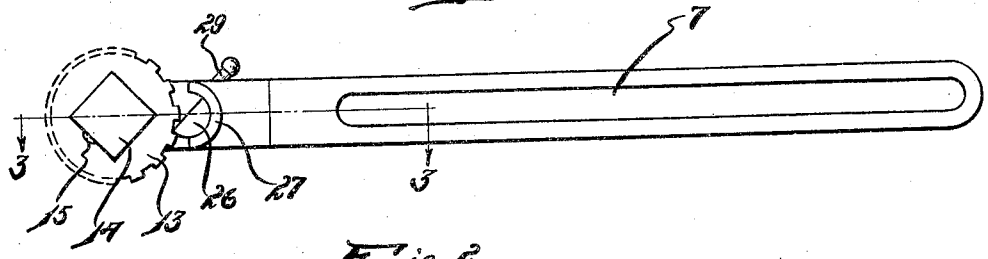

Fig. 2.

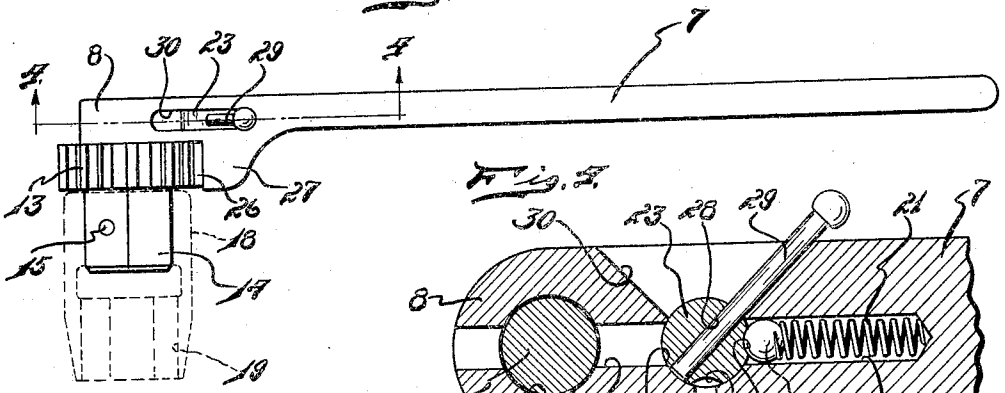

Fig. 4.

Fig. 3.

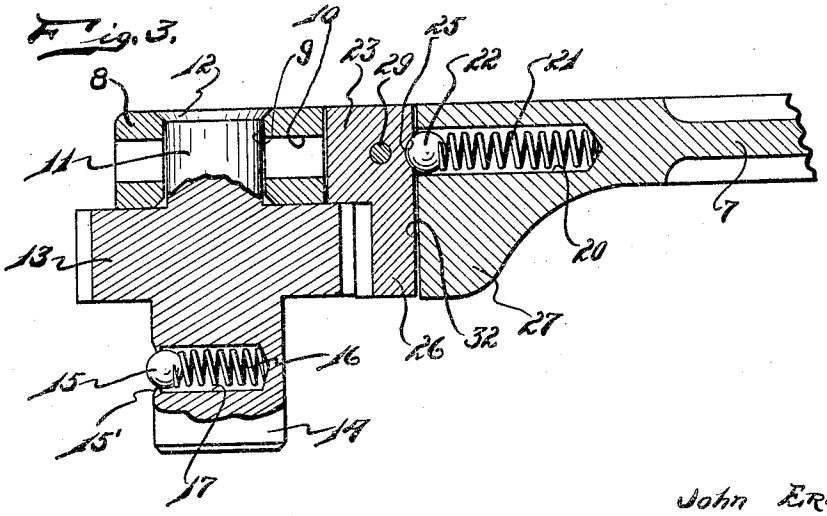

INVENTOR.
John Erickson
BY
Thos. J. Donnelly
ATTORNEY.

Patented Nov. 22, 1932 1,888,793

UNITED STATES PATENT OFFICE

JOHN ERICKSON, OF DETROIT, MICHIGAN

WRENCH

Application filed November 28, 1930. Serial No. 498,556.

My invention relates to a new and useful improvement in a wrench of the ratchet type and adapted particularly for use with sockets.

It is an object of the present invention to provide a wrench of this class which will be simple in structure, economical of manufacture, durable, highly efficient in use, and easily and quickly adjusted for ratchet operation in either direction.

Another object of the invention is the provision of a wrench of this class in which the number of parts will be reduced to a minimum and in which the various parts may be easily assembled and disassembled.

Another object of the invention is the provision of a wrench having a reinforcing portion at that part of the wrench which is ordinarily subjected to the greatest strain.

Other objects will appear hereinafter.

The invention consists in the combination and arrangement of parts hereinafter described and claimed.

The invention will be best understood by a reference to the accompanying drawing which forms a part of this specification, and in which,

Fig. 1 is a top plan view of the invention.

Fig. 2 is a side elevational view of the invention.

Fig. 3 is a fragmentary sectional view taken on line 3—3 of Fig. 1.

Fig. 4 is a fragmentary sectional view taken on line 4—4 of Fig. 2.

The invention comprises a handle 7 having a head 8 in which the opening 9 is formed for reception of the trunnion or neck 11 which extends outwardly from one face of the ratchet wheel 13 and which is preferably made integral therewith. The end of the trunnion or neck 11 is upset or peened as at 12 to retain this trunnion in the opening 9 so that the ratchet wheel 13 is rotatably mounted. A flat faced engaging portion 14 projects from the opposite face of the ratchet wheel 13 and is provided with a pocket 17 in which the spring 16 and the ball 15 are engaged, the engaging portion 14 being peened over at 15′ so as to retain the ball 15 in position. The ball 15 is intended to prevent an undue removal of the socket 18 therefrom, this socket 18 being provided with the nut receiving recess or pocket 19.

A pocket 20 is formed in the handle in alignment with the passage 10 which extends through the head 8. A spring 21 is positioned in the pocket 20 adapted to press the ball 22 into engagement with the periphery of the pawl forming member 23 which is formed cylindrical at its upper portion and semi-cylindrical at its lower portion 26. Peripheral pockets 24 and 25 are formed in the upper portion 23 of this pawl forming member, these pockets being spaced apart as shown in Fig. 4. A reinforcing shoulder 27 is formed on the lower face of the handle 7 adjacent the forward end thereof so as to serve as a backing for the semi-cylindrical portion 26.

Projected into a passage 28 formed in the cylindrical portion of the pawl forming member is a pin 29 which extends outwardly and engages in a slot 30 formed in one side of the handle 7 adjacent its forward end. A passage 31 is formed in the opposite face of the handle and projected radially inwardly of the transverse opening 32 formed in the handle and in which the pawl forming member engages. This opening 32 is axially parallel with the opening 9.

The passage 10 extends outwardly to the end of the head 8 so that this passage 10 is formed in the drilling operation in which the pocket 20 is formed. In assembling the device the spring 21 and the ball 22 are slid down the passage 10 to engage in the pocket 20 and the pawl forming member then placed in position so as to prevent a slipping of the ball from its position as shown in Figs. 3 and 4. The pin 29 is then inserted to retain the member 23 in position and the passage 31 serves as a means for lubricating these parts. The trunnion 11 is then inserted in the opening 9 and peened over as at 12 and the edges of the semi-cylindrical member 26 will engage the teeth of the ratchet 13 and upon a rocking of the handle 7 serve to rotate the socket 18. By swinging the pin 29 from one end of the slot 30 to the other, the direction of rotation is determined as the opposite edge

of the member 26 would thus be brought into engagement with the teeth of the ratchet wheel 13. The outer end of the passage 10 will serve as a means for bringing lubricant into contact with the trunnion 11.

The disassembly of the structure is believed obvious, and by removing the pin 29 the ball may be removed without disturbing the ratchet wheel and its mountings, and similarly the ratchet wheel and its mountings may be removed and replaced without disturbing the ball and its connections.

The structure is such that the device is reinforced at those parts where the greatest strain is transmitted to the wrench and at those parts where the handle is weakened because of slotting, and because of the formation of the passages and openings.

While I have illustrated and described the preferred form of construction of my invention, I do not wish to limit myself to the precise details of structure shown but desire to avail myself of such variations and modifications as may come within the scope of the appended claims.

Having thus described my invention, what I claim as new, and desire to secure by Letters Patent is:

1. A wrench of the class described, comprising: a handle; a head mounted on one end of said handle; the under surface of said head at the forward end thereof being cut away to provide a shoulder at the rearward portion of said head on its under surface; a socket engaging portion rotatably mounted on said head and projecting beyond said cut away portion; a ratchet wheel fixedly mounted on said socket engaging portion and positioned to lie in the cut away portion of said head forwardly of said shoulder, said head having a transversely extending opening formed therein at the rearward side of the cut away portion, the forward face of said shoulder being recessed to provide a surface aligning with the inner surface of the rearward side of said opening; a pawl forming member having a cylindrical portion engaging in said opening, the remaining portion of said pawl being substantially semi-cylindrical and engaging with its curved surface the recessed portion of said shoulder and adapted for engaging with the edges of its flat face the teeth on said ratchet wheel.

2. A wrench of the class described, comprising: a handle; a head mounted on one end of said handle, the under surface of said head at the forward end thereof being cut away to provide a shoulder at the rearward portion of said head on its under surface; a socket engaging portion rotatably mounted on said head and projecting beyond said cut away portion; a ratchet wheel fixedly mounted on said socket engaging portion and positioned to lie in the cut away portion of said head forwardly of said shoulder, said head having a transversely extending opening formed therein at the rearward side of the cut away portion, the forward face of said shoulder being recessed to provide a surface aligning with the inner surface of the rearward side of said opening; a pawl forming member having a cylindrical portion engaging in said opening, the remaining portion of said pawl being substantially semi-cylindrical and engaging with its curved surface the recessed portion of said shoulder and adapted for engaging with the edges of its flat face the teeth on said ratchet wheel, said ratchet wheel overlying said opening.

3. A wrench of the class described, comprising: a handle; a head mounted on one end of said handle the under surface of the forward end of said head being cut-away to provide a shoulder, the forward face of said shoulder being recessed to conform to the curvature and lie in alignment with one side of a cylindrical transversely extending opening formed in said head forwardly of said shoulder; a socket engaging portion rotatably mounted on said head forwardly of said shoulder; a ratchet wheel fixedly mounted on said socket engaging portion and overlying said opening; a pawl cylindrical at one end, semi-cylindrical at its opposite end the cylindrical portion engaging said opening and the periphery of the semi-cylindrical portion engaging the recess on the forward face of said shoulder, the edges of the flat faces of said semi-cylindrical portion being adapted for engaging the teeth of said ratchet wheel; and means for rocking said pawl forming member for moving the opposite edges of the semi-cylindrical portion into engagement with the teeth of the ratchet wheel at will.

In testimony whereof I have signed the foregoing specification.

JOHN ERICKSON.