(No Model.)

T. F. WATSON.

CASE FOR CARDS, SAMPLES, &c.

No. 328,161. Patented Oct. 13, 1885.

Fig. 1

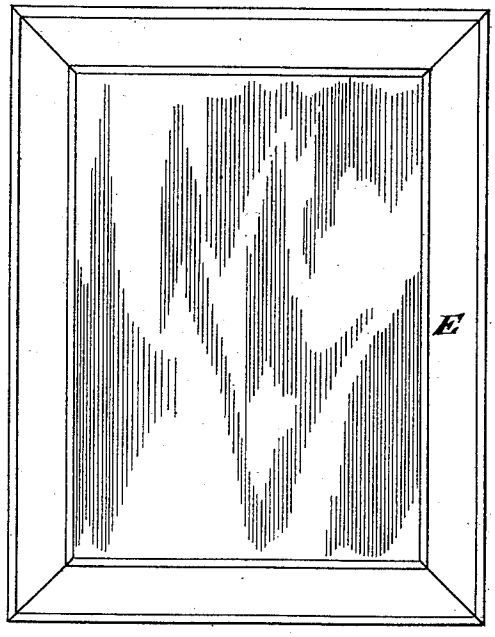

Fig. 2

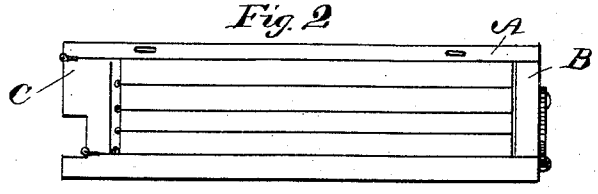

Fig. 3

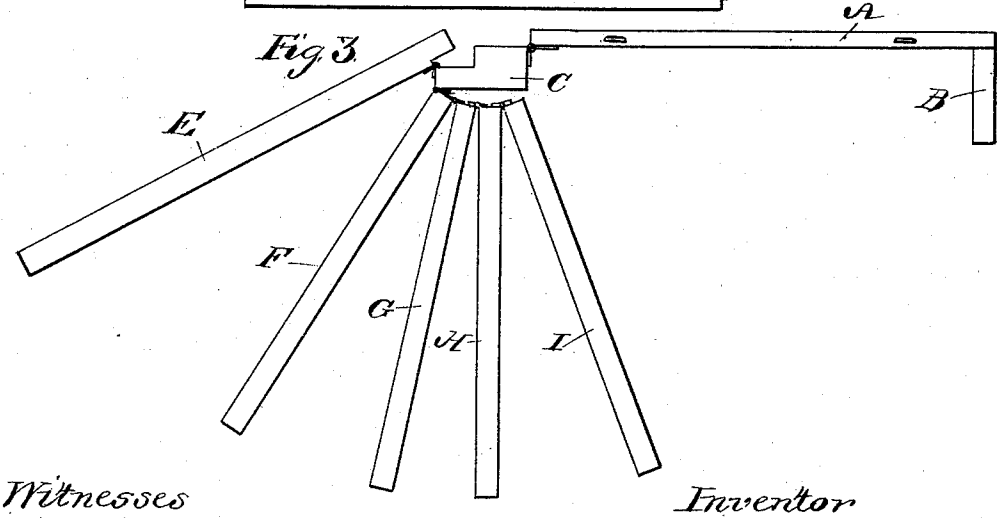

Witnesses
S. Williamson
W. T. Haviland

Inventor
Theodore F. Watson
By Smith & Hubbard
Attys

N. PETERS. Photo-Lithographer. Washington, D. C.

UNITED STATES PATENT OFFICE.

THEODORE F. WATSON, OF NEW MILFORD, CONNECTICUT.

CASE FOR CARDS, SAMPLES, &c.

SPECIFICATION forming part of Letters Patent No. 328,161, dated October 13, 1885.

Application filed September 1, 1884. Serial No. 141,899. (No model.)

To all whom it may concern:

Be it known that I, THEODORE F. WATSON, a citizen of the United States, residing at New Milford, in the county of Litchfield and State of Connecticut, have invented certain new and useful Improvements in Cases for Cards, Samples, and the like; and I do hereby declare the following to be a full, clear, and exact description of the invention, such as will enable others skilled in the art to which it appertains to make and use the same.

My invention relates to certain novel and useful improvements in cases for cards, samples, and the like, and has for its object to provide a device of this description which shall combine economy of space with large capacity and simplicity of construction; and with these ends in view my invention consists in the details of construction and combination of elements, hereinafter fully and in detail explained, and then specifically designated by the claims.

In order that those skilled in the art to which my invention appertains may more fully understand its construction and operation, I will proceed to describe the same in detail, referring by letter to the accompanying drawings, forming a part of this specification, in which—

Figure 1 is a front elevation of my improvement when closed; Fig. 2, a top view when closed, and Fig. 3 a top view showing the frames open and swung out from the case.

Similar letters denote like parts in the several figures of the drawings.

A is the back of the device, constructed of wood, and having secured at one side thereof, and at right angles thereto, the strip B.

C is a block hinged to the back A, and adapted to open and close upon its hinges.

E is the cover of the device hinged to block C at its outer portion. This cover when closed abuts upon the side strip, B, and may be fastened thereto in any desired manner, as by a hook.

F is a leaf hinged to block C. G is a second leaf hinged to F. H is a third leaf hinged to G, and I is a fourth leaf hinged to its predecessor H. It will readily be seen that each of these leaves is immediately connected to block C through the intermediate leaves. This arrangement permits the opening of any or all of the leaves, as may be desired.

In my improvement I do not wish to be confined to the exact construction of leaf, nor to the number shown in the drawings, as trays may with equal facility be used in place of leaves, and in any desired number.

Having thus described my invention, what I claim as new, and desire to secure by Letters Patent, is—

1. In combination with the back, the block secured to it by means of hinges, and having attached thereto a series of leaves, the first hinged to said block and each successive to the preceding leaf, the whole adapted to close up and be secured to the back, substantially as described.

2. The combination, with a block hinged to the back, as described, of a cover hinged to the block, and of several leaves, the first hinged to said block and each successive to the preceding leaf, the whole adapted to be closed and secured by the fastening of the cover to the side strip, substantially as set forth.

3. The combination of back A, strip B, block C, cover E, and leaves F, G, H, and I, all arranged as described, and for the purpose set forth.

In testimony whereof I affix my signature in presence of two witnesses.

THEODORE F. WATSON.

Witnesses:

HENRY L. MYGATT,

W. L. JENNINGS.