33-252. OR 1,596,568 SR

Draftsman

55

Aug. 17, 1926. 1,596,568

A. H. WOODWARD

COMPENSATING SIGHT FOR AERIAL GUNNERY

Filed April 28, 1920 3 Sheets-Sheet 1

Fig. 1

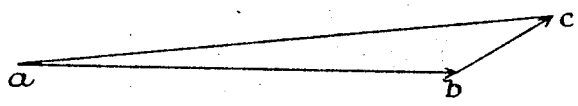

Fig. 2

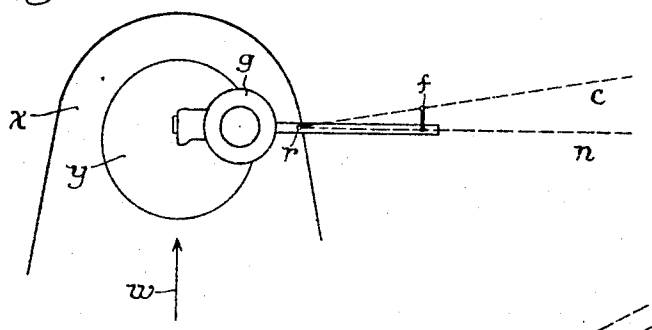

Fig. 3

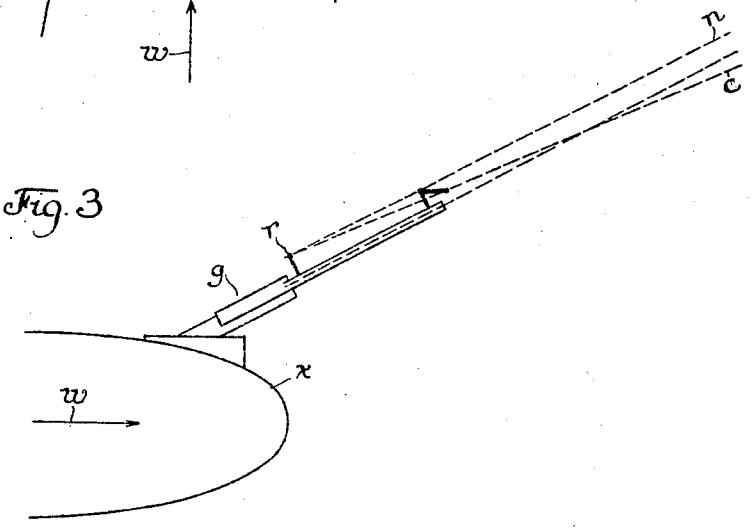

1412

~~1433~~

~~1416~~

Inventor
Arthur H. Woodward
By Brown Boettcher & Dienner Att'ys

2P

88. GEOMETRICAL INSTRUMENTS.

53

Aug. 17, 1926. 1,596,568

A. H. WOODWARD

COMPENSATING SIGHT FOR AERIAL GUNNERY

Filed April 28, 1920 3 Sheets-Sheet 2

Fig. 4

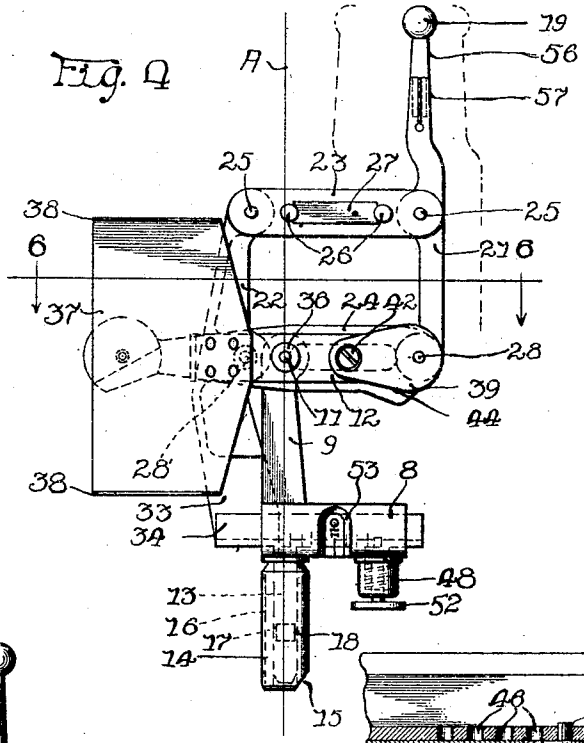

Fig. 7

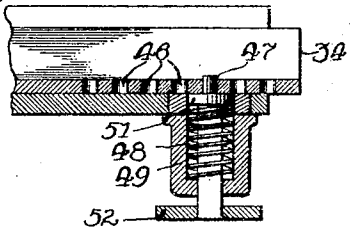

Fig. 5

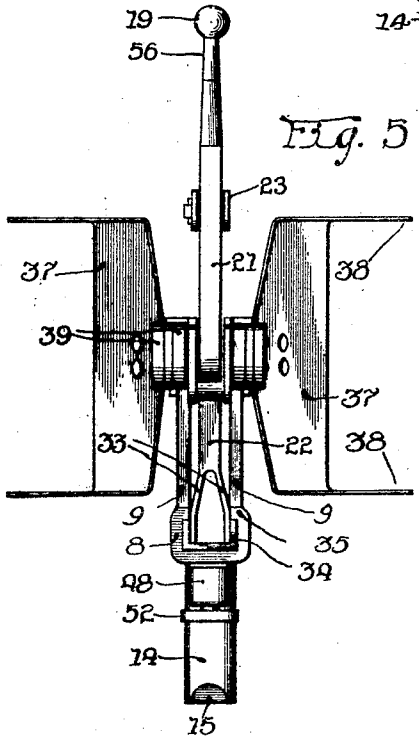

Fig. 6

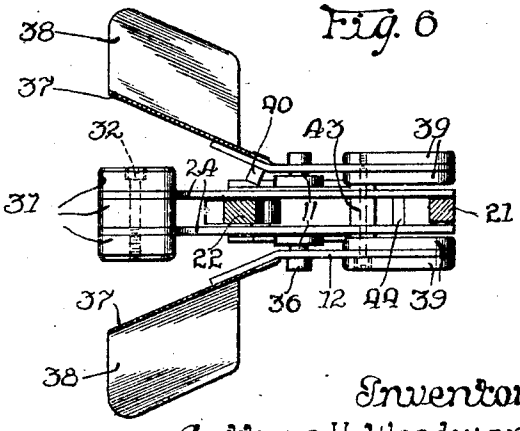

Inventor
Arthur H. Woodward
By Brown Boratch & Dixon
Attorneys

GR. GEOMETRICAL INSTRUMENTS.

53

Aug. 17, 1926. 1,596,568

A. H. WOODWARD

COMPENSATING SIGHT FOR AERIAL GUNNERY

Filed April 28, 1920 3 Sheets-Sheet 3

Fig. 8

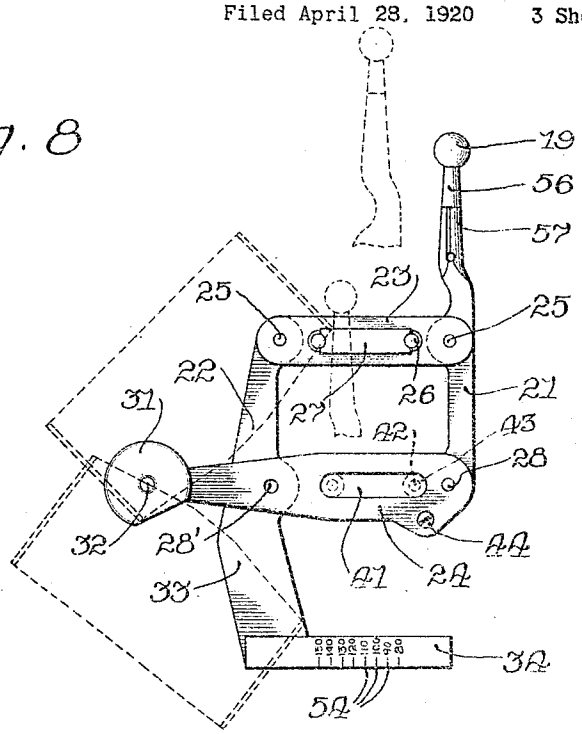

Fig. 9

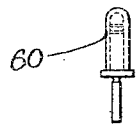

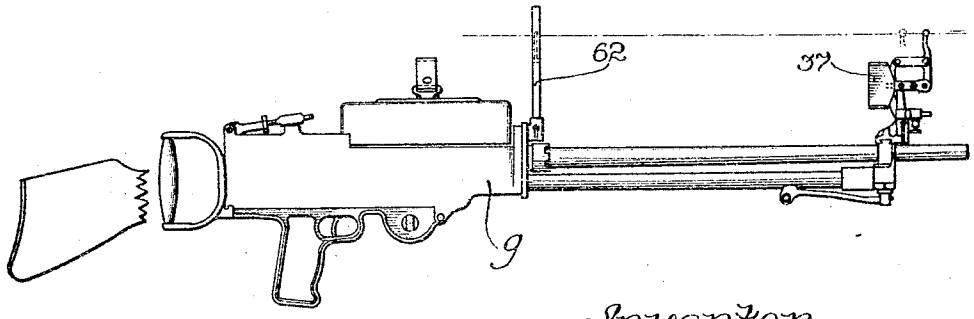

Fig. 10

Inventor
Arthur H. Woodward
By Brown Boettcher & Dewey
Attorneys

82. GEOMETRICAL INSTRUMENTS.

Draftsman

53

Patented Aug. 17, 1926. 1,596,568

UNITED STATES PATENT OFFICE.

ARTHUR H. WOODWARD, OF CHICAGO, ILLINOIS, ASSIGNOR TO INTERNATIONAL REGISTER COMPANY, OF CHICAGO, ILLINOIS, A CORPORATION OF ILLINOIS.

COMPENSATING SIGHT FOR AERIAL GUNNERY.

Application filed April 28, 1920. Serial No. 377,296.

My invention relates to compensating sights for aerial gunnery.

In firing a mobile gun from an aircraft, the motion imparted to the projectile by the motion of the craft must be taken into account. The fundamental principle whereby the necessary correction is secured, which is old in the art, is to effect a calculated offset of one of the two sighting members which determine the line of sight, this offset being calculated from the normal line of sight parallel to the axis of the gun barrel. Obviously, either the fore sight or the rear sight may be offset in order to accomplish this correction, the offset being in the direction of motion of the craft in the case of the fore sight and in the opposite direction in the case of the rear sight. For simplicity of description I shall refer only to the practice of offsetting the fore sight.

In carrying out the above principle it has for some time been the practice to mount the fore sight, preferably a bead for universal movement at a calculated uniform distance from a point a calculated distance forwardly of the rear sight, preferably a "peep," this latter distance being commonly termed in the art the "sight base."

It will be clear, as this description proceeds, that the amount of this calculated offset bears a definite relation to the air speed of the craft, and the direction of the offset bears a definite relation to the direction of motion of the craft through the air.

It is the practice of the prior art to effect this characteristic mounting of the fore sight by means of links pivoted at one end at a point accurately below the normal line of sight, the sight post being pivoted to the free ends of the links. Theoretically, for the purposes of the correction herein pertinent, the links should be pivoted in the normal sight line and the sight itself should be directly upon the free end of the link, but this is impractical since the vision would be obscured.

As has been stated, the offset must always be in the direction of motion of the craft through the air, i. e., parallel to its keel or axis, regardless of the position of the gun. This has been effected by means of so called "wind vanes" carried upon the links and operating to maintain them in this essential position. Other means might be employed to effect this particular result, but this is the preferred means and my invention has certain specific features by reason of my employment thereof.

The sights of the prior art were such that each sight was designed for one particular air speed, that is, the length of the links which have been referred to was made a function of a particular air speed. This meant that each sight was utterly useless at any speed other than the one for which it was calculated and designed and that a sight had to be provided for each air speed which was to be met.

The desideratum was an adjustable sight,—one which could be adjusted to operate properly at any speed within reasonable limits. The solution of the problem was, however, attended by numerous difficulties, chief among which was that of maintaining the "balance" of the movable elements. Obviously it is desirable that the movable elements, comprising the sight itself and the wind vanes should be balanced so as to be immune, so far as their correcting movement is concerned, from the effect of gravity, their position being assumed alone by the action of the relatively moving air.

My invention secures the desirable adjustability of the sight offset and does so in such a way that in each speed setting within its limits, it operates precisely as one of the prior art devices calculated and designed for that particular speed.

As a further feature my invention provides a construction whereby the sight itself may be removed, for convenience in shipping, due to the frequently fragile nature of the sight, and for the substitution of a different sight, such as a luminous bead for night firing.

Certain constructional features of my invention are novel and important and are made the subject matter of some of the appended claims.

In the accompanying drawings,

Figure 1 is a vector diagram illustrating the fundamental principle of the device;

Figures 2 and 3 are diagrammatic views showing instances of a horizontal correction and vertical correction, respectively;

Figure 4 is a side elevational view of the compensating sight of my invention;

Figure 5 is a front elevational view thereof;

Figure 6 is a sectional view taken on the plane of the line 6—6 of Figure 4 and looking in the direction indicated by the arrows;

Figure 7 is an enlarged sectional view showing the details of the setting mechanism;

Figure 8 is a side elevational view of the bead unit isolated from the remainder of the sight;

Figure 9 is an elevational view of a luminous bead for attachment to the sight; and

Figure 10 is a side elevational view illustrating the sight mounted in association with a so-called "ring" sight upon a machine gun of the Lewis type.

In Figure 1 the line *a—b* represents the "sight base" above referred to; its length is a function of the bullet velocity due to the explosion of the charge in the chamber of the gun and its direction is parallel to the gun barrel. It therefore represents the component of motion of the bullet due to the explosion of the charge in the chamber of the gun. The line *b—c* represents the sight offset; its length is the same function of the air speed of the craft and its direction is that of the motion of the craft. It therefore represents the component of motion of the bullet due to the motion of the craft. The line *a—c* is the resultant,—the direction of the bullet due to both forces.

This resultant is therefore the desired sight line to be laid point blank to the target, assuming the target to be stationary. For a moving target this sight line may be further corrected by other means, but that need not be gone into here. It is sufficient here to say that the correction with which I am concerned here is the same in either case.

It is also pertinent to point out here that the effect of gravity on the projectile is not here taken into account, it being well understood in the art that sights of this class are used on machine guns at fairly close ranges wherein the effect of gravity is negligible or readily corrected by the gunner as he continues to fire the gun.

In Figures 2 and 3 I illustrate the bow *x* of the aircraft with a machine gun *g* suitably mounted in the cockpit *y*. The rear sight is indicated at *r* and the fore sight at *f*. The arrow *w* in each case shows the direction of flight. The dotted line *r—n* is the normal sight line, to which the path of the bullet would be parallel were it not for the motion of the craft. The line *r—c* is the corrected sight line, determined by the offset fore sight, to which line the path of the bullet is substantially parallel. Figure 3 illustrates a vertical correction. In both instances the fore sight offset is in the direction of flight, and the triangle formed by the line *r—n*, the offset, and the line *r—c*, is really a reproduction of the vector diagram, Figure 1. Obviously the gun could so be laid, relative to the line of flight, as to entail a combination of horizontal and vertical corrections.

My invention, as before stated, lies in making the sight offset adjustable, and in securing this result I conceived, as a preferred embodiment, of an important feature in providing two independently balanced units, the wind vane unit and the sight unit.

I have used the word "sight" herein as applying to my device as a whole and also as applying to the specific sighting member, such as the bead which I have illustrated, since the sighting member could take some form other than that of a bead, but the intention of the text is clear. For convenience I shall refer to it hereinafter as the "bead sight."

The frame portion of the bead sight unit comprises a channel shaped member 8 formed with two parallel uprights 9, 9 which carry the pivot studs 11 for the wind vane arms 12, 12, said studs being received by bushings 36, 36, brazed or otherwise secured in the wind vane arms. The channel member 8 has a vertical pivot stem 13 riveted in the web thereof and this pin fits for easy rotation in a sleeve or bushing 14 which is adapted for reception by a socket in the mounting bracket near the muzzle of the gun. The bushing 14 is chamfered, as indicated at 15, to facilitate insertion into this socket and also has a longitudinal keyway 16 cut therein for engagement with a spline or the like in the socket to prevent rotation thereof. This mounting bracket may be of any conventional pattern and needs no detail description here as they are well known in the art. An annular groove 17 is cut in the stem 13 and an offset pin 18 passing through the bushing bears in this groove and retains the bushing upon the stem.

The wind vane arms are bent obliquely outwardly to the rear of the uprights 9, 9 and have riveted thereto the wind vanes 37, 37. One of the rivets 40 projects inwardly from its arm and functions to limit the downward motion of the arm and consequently also the other arm as will presently appear, by striking the back of the upright 9. At their tops and bottoms these wind vanes are bent laterally as shown at 38, 38, whereby the vanes act both for vertical and horizontal correction. Counterbalancing means for the vanes is provided on the other ends of the arms 12, 12 in the form of small

88. GEOMETRICAL INSTRUMENTS.

53

weights 39, 39 riveted one upon each side of each arm.

I shall now refer to the bead sight unit.

The sight bead 19 is supported at the tip of a sight post 21 which forms one of the members of a parallelogrammatic system of links permitting the rise and fall of the bead. This parallelogram comprises also the relatively stationary upright 22 and the pairs of parallel upper and lower links 23 and 24, respectively, joining the upright 22 and the sight post 21. The upper pair of links 23 are pivoted upon opposite sides of the members 21 and 22 by means of bearing pins 25. The links are held together and upon these pivot pins by spacing studs 26 which have reduced ends riveted in one link and extending through the other, where they are held in place by a flat locking spring 27 engaging in kerfs cut therein as shown in Figure 4. This construction facilitates assembly and reduces friction to a minimum.

The lower pair of links 24 are pivoted on opposite sides of the members 21 and 22 upon pivot pins 28 and 28′ respectively. The four pivot pins 25, 25 and 28, 28′ define the corners of a true parallelogram, as is shown clearly in Figure 8. The lower links extend rearwardly beyond the upright 22, where they are provided with the counterbalancing weights 31, disposed one between and one on each side of the links, as shown in Figure 6. A screw 32 passes through these weights and secures them together and to the links 24, this arrangement also properly spacing the links at their rear ends. These weights accurately counterbalance the weight of the parallelogram and the sight carried thereby. At their forward ends the links 24 are joined and properly spaced apart at 44 passing through a spacing sleeve which serves to space them properly apart.

The upright 22 has its lower end bifurcated, as indicated at 33 in Figure 5, these bifurcated ends being spread and brazed or welded into the end of a channel shaped slide 34. This slide fits snugly in the channel member 8 for sliding longitudinal adjustment therein, being confined therein by lips 35 turned inwardly from the upper margins of the channel 8.

Thus the bead sight unit, which is independently accurately balanced, is adjustable relatively to the wind vane unit, which is independently accurately balanced, to effect the adjustment of the bead sight toward or away from the axis A (Figure 4).

It will be noted from Figure 8 that the two lower links 24, 24 have aligned longitudinal slots 41. A screw 42 passes through the weights 39 and the arms 12 upon which they are carried and is tapped into one of them, this screw also passing through the slots 41, 41 and carrying a small anti-friction roller 43 which is adapted to roll in the slots 41. This arrangement effectively joins the two arms 12 so that they operate together.

It will now be clear that the engagement of the roller 43, which is upon the wind vane unit, in the slots 41 in the bead sight unit mechanically connects the two units for operation together. In other words, by this means the bead sight is made to respond to the movement of the vanes.

Obviously the effective length of the links is the distance between the axis A and the vertical center line passing through the bead sight 19, the outer pivot 25 and the pivot 28. And, obviously, this effective length can be varied by shifting the slide member 34 in the channel member 8. With my arrangement the horizontal correction is absolutely accurate. Due to the fact that the vertical center line passing through the inner pivot 25 and the pivot 28′ is not coincident with the axis A, the vertical correction is not absolutely accurate, but the arrangement is such, as will now be pointed out, that the inaccuracy is made so slight, within entirely adequate limits, as to be negligible. It will be noted that as the slide 34 is drawn backwardly, i. e. to the left in Figure 4, the result is that not only is the bead sight 19 moved over to the axis A, but the distance between the pivot 28′ and the point where the roller 43 engages the links 24 is lengthened, thus reducing the rise and fall of the bead sight, for a given movement of the vanes, and making its path more nearly what it would be if it swung about a pivot in the axis A.

The arrangement of parts is such as to permit entirely adequate movement of the vanes vertically without interference, as indicated in dotted lines in Figure 8. The dotted positions of the bead sight show its universal movement.

Referring to Figure 7, it will be seen that the web of the slide member 34 is provided with a series of spaced openings 46 into which a spring-pressed locking pin 47 may be made to engage in order to hold the slide in any adjusted position. This locking pin is adapted to be reciprocated in a housing 48 secured to the under side of the channel member 8. A coil spring 49, confined in this housing, bears against a collar 51 on the pin and normally retains the pin in locking engagement with the proper opening in the slide. The knob 52 at the lower end of the pin permits its ready manipulation.

A scale opening 53 is formed in the side of the channel member 8 and a scale line in this opening is adapted to register with a scale of speed indicia 54 engraved on the side of the slide member 34.

The sight bead 19 is mounted upon a pin 56 which is releasably secured in the split end 57 of the sight post 21, the pin being held by the natural resiliency of said split end. For use at night, the luminous bead 60 shown in Figure 9, which is composed of a transparent cap containing a radium compound having luminous properties, may be substituted for the bead 19.

In Figure 10 I have illustrated my improved sight applied to a Lewis machine gun g, which is also equipped with a ring rear sight 62.

It will now be clear that, as in the case of the compensating sights of the prior art, as above described, the wind vanes will keep the bead sight offset in the direction of the line of flight of the aircraft upon which it is carried. In Figure 10, for instance, the condition illustrated is that which obtains when the axis of the gun is exactly parallel to the line of flight. The mode of operation illustrated in Figures 1, 2 and 3, and described with reference thereto, obtains throughout.

The sight is set at the speed at which the craft flies. The indicia on the slide member 34 represent miles per hour. For different speeds the effective lengths of the links vary accordingly. Assuming that the bullet has a muzzle velocity of 2650 feet per second, for instance, the effective length of the links, when the sight is set at 90 miles per hour, is .8685 inches, and when the sight is set at 130 miles per hour, is 1.2545 inches. And, whatever the setting, the sight is accurately balanced so as to be unaffected by gravity.

As shown, the speed settings are in units of ten. Obviously, by a screw setting, or some similar arrangement, the setting could be made as fine as desired.

I claim:

1. In combination with a gun, a compensating sight mounted thereon comprising a base, a sight member, and means for supporting said sight member on said base, said supporting means permitting movement of said sighting member at a calculated distance from a given point independent of the orientation of the gun and being adjustable to vary said distance.

2. In combination with a gun, a compensating sight mounted thereon comprising means for automatically correcting errors due to velocity of the gun itself in any direction, and means for adjusting said correcting means to vary the amount of the correction and for securing the parts in adjusted position.

3. In combination with a gun, a compensating sight mounted thereon comprising a base, a sight member, and means supporting said sight member for movement independent of the orientation of the gun in a circular path at a predetermined distance from a predetermined point, said supporting means being adjustable to vary said distance.

4. In a compensating sight, a pivoted link, a sight member mounted upon said link, means for balancing said link, a second pivoted link, a wind vane mounted upon said second link, means for balancing said second link, means for maintaining said links in parallel planes, means for engaging one link with the other, and means about which said links are pivoted.

5. In a compensating sight, a pivot, a link mounted on said pivot, a sight member mounted upon said link, means for balancing said link, a second pivot, a second link mounted on said second pivot, a wind vane mounted upon said second link, means for balancing said second link, means for maintaining said links in parallel planes, and an adjustable connection between said links whereby the point of connection of one relative to the other may be changed.

6. In a compensating sight, a sight member unit comprising a support, a link pivoted on said support, a sight member mounted on said link, and means for balancing said link, a wind vane unit comprising a support, a link pivoted on said support, a wind vane mounted on said link, and means for balancing said link, and means for interengaging said links, said units being adjustable relatively to each other, the structure as a whole being rotatable.

7. In a compensating sight, a balanced sight member pivoted on two transverse axes, a wind vane operative to control the position of said sight member relative to said axes, and adjustable means for varying the relation between said wind vane, said sight member, and said axes to secure different degrees of compensation in said sight.

8. In a wind vane sight, a supporting frame pivoted for rotation about a vertical axis, said frame comprising a guideway and a pair of pivot posts extending therefrom, a parallelogram comprising a plurality of members pivoted together, a slide secured to one of said members, a sight member secured to the opposite member, said parallelogram being disposed between said pivot posts with said slide movable in said guideway, a pair of vane arms pivoted to said posts, wind vanes at the ends of said arms, a pivot pin extending between the other ends of said arms, one of the members of said parallelogram having a slot through which said pivot pin extends, said slide member having scale indicia for indicating the compensation of said sight member, and detent mechanism for locking said slide member in one of a plurality of positions.

9. In a compensating sight, a support, pivot studs on opposite sides of said support, a link mounted on each pivot stud,

33. GEOMETRICAL INSTRUMENTS.

53

a sight post between the free ends of said links, pivot studs on said sight post upon which the free ends of said links are pivoted, spacers between said links, said spacers having reduced ends passing through said links and provided with kerfs, and a locking piece engaging in said kerfs.

10. In a compensating sight, a balanced sight member pivoted on two transverse axes, a wind vane operative to control the position of said sight member relative to said axes according to the direction of air flow passing by the sight, and adjustable means for varying the relation between said wind vane, said sight member, and said axes to secure different degrees of compensation in said sight.

11. In combination, a pivoted support, a sight member on said support movable in one plane only with respect thereto, a single means for automatically controlling the position of said sight member and for orienting said support, and a single means for adjusting said sight member with respect to said support, to simultaneously vary the effective displacement of said sighting member resulting from the two functions of said automatic control means.

12. In combination, a support pivoted on a predetermined axis, a frame on said support slidable at an angle to said pivotal axis, a sight member on said frame movable in a predetermined plane with respect thereto, a lever pivoted on said support for movement in the plane of movement of said sight member, means operating through said lever for automatically controlling the orientation of said support, means for automatically controlling the position of said lever in its plane of movement, and a transmission including a pin and slot connection between said lever and said sighting member, whereby adjustment of said frame to move said sight member toward or away from the pivotal axis of said support, simultaneously alters the effect of said lever on said sight member.

In witness whereof, I hereunto subscribe my name this 24th day of April, 1920.

ARTHUR H. WOODWARD.