Feb. 29, 1944. R. A. SMITH 2,342,762

CEMENT APPLICATOR

Filed May 29, 1942 3 Sheets-Sheet 1

Fig. 1.

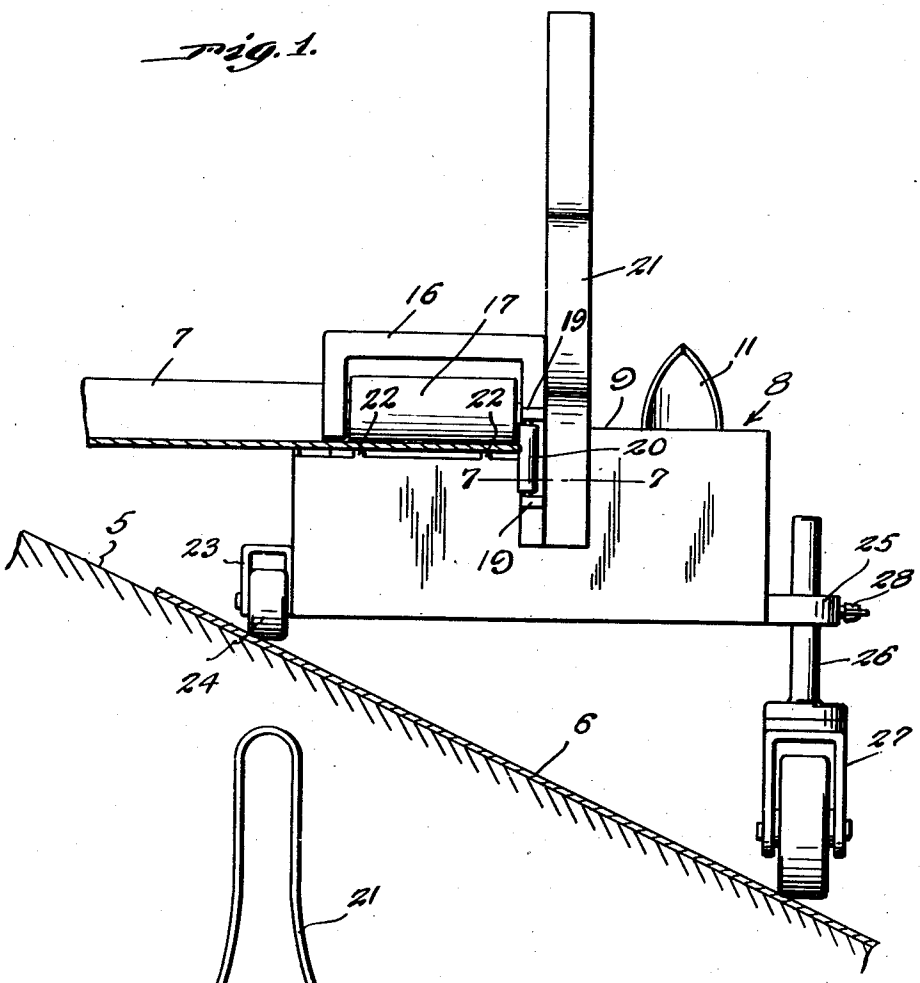

Fig. 2.

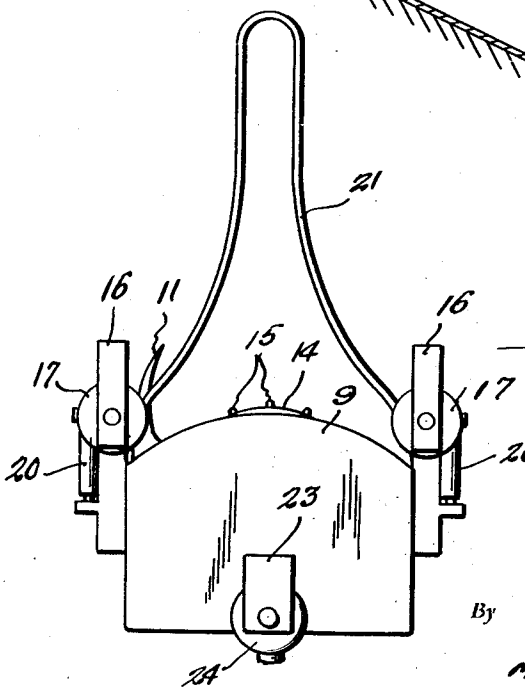

Inventor

Roy A. Smith

By Clarence A. O'Brien and Harvey B. Jackson

Attorneys

Feb. 29, 1944. R. A. SMITH 2,342,762

CEMENT APPLICATOR

Filed May 29, 1942 3 Sheets-Sheet 2

Fig. 3.

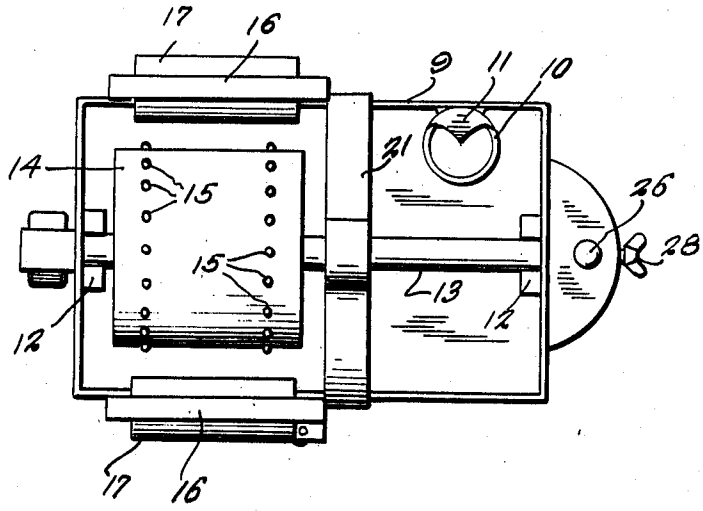

Fig. 6.

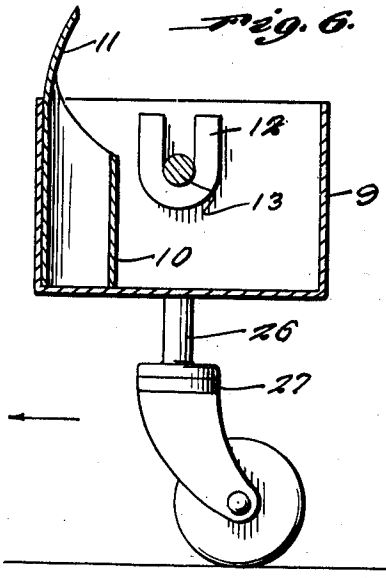

Fig. 7.

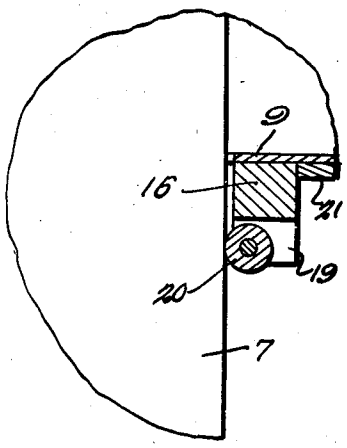

Inventor

Roy A. Smith

By Clarence A. O'Brien and Harvey B. Jacobson, Attorneys

Feb. 29, 1944. R. A. SMITH 2,342,762

CEMENT APPLICATOR

Filed May 29, 1942 3 Sheets-Sheet 3

Fig. 4.

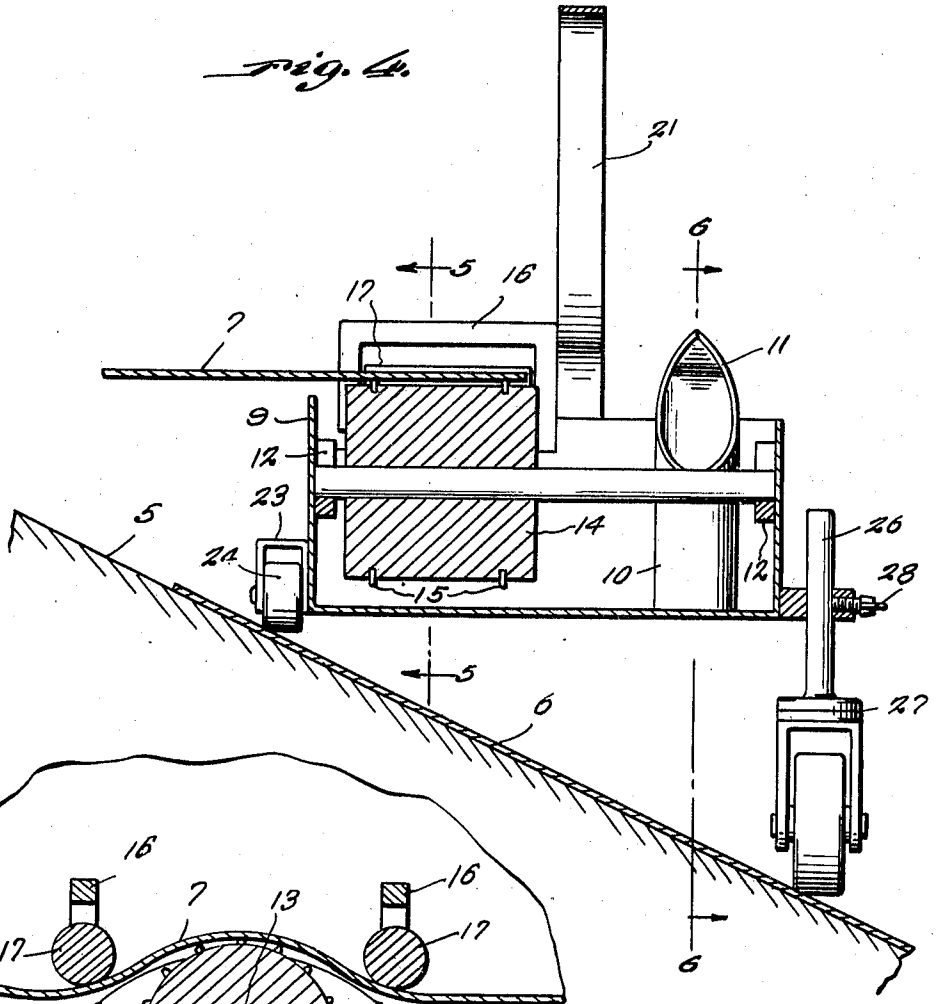

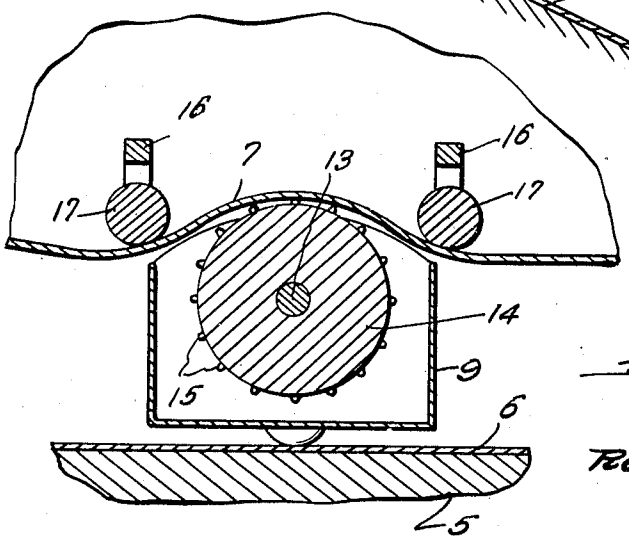

Fig. 5.

Inventor

Roy A Smith

By Clarence A O'Brien and Harvey B. Jacobson

Attorneys

Patented Feb. 29, 1944 2,342,762

UNITED STATES PATENT OFFICE

2,342,762

CEMENT APPLICATOR

Roy A. Smith, Norwood, Mass.

Application May 29, 1942, Serial No. 445,056

2 Claims. (Cl. 91—51)

The present invention relates to new and useful improvements in means for applying cement to sheet roofing material and has as its principal object the provision of a portable machine which can be easily rolled along to apply cement or other adhesive to roll roofing material along the edge portion thereof that is to be cemented in place.

The principal object of the present invention is to provide a small machine of the character stated which can be easily rolled along an inclined roof without likelihood of spilling any of its contents.

Another important object of the invention is to provide a machine of the character stated which can be replenished with cement from time to time in an easy and convenient manner.

Another important object of the invention is to provide a roll roofing material cement applying machine which will apply cement in an even and uniform manner.

These and other important objects and advantages of the invention will become apparent to the reader of the following description.

In the drawings—

Figure 1 represents a side elevational view of the machine with a step of roofing material shown engaged.

Figure 2 is a back end elevational view of the machine.

Figure 3 is a top plan view.

Figure 4 is an enlarged longitudinal sectional view.

Figure 5 is a vertical sectional view on the line 5—5 of Figure 4.

Figure 6 is a transverse vertical sectional view taken substantially on the line 6—6 of Figure 4.

Figure 7 is an enlarged fragmentary horizontal sectional view taken substantially on the line 7—7 of Figure 1.

Referring to the drawings wherein like numerals designate like parts, it can be seen in Figure 1, that numeral 5 denotes a roof base upon which has been laid a strip of roofing material 6 and over this strip a strip 7 is to be overlapped after application of cement to the overlapping edge portion. In Figure 1, numeral 8 generally refers to the improved machine shown engaged with the overlapping edge portion of the strip 7.

The machine includes a rectangular-shaped tank 9 having positioned and suitably secured in upright position in one corner portion thereof a tube 10 having a can punch 11 at its upper end projecting upwardly above the top of the tank, so that a can of cement can be inverted, pushed downwardly on the opener 11, with the result that the contents will run directly into the tank 9.

At the inside of the tank and secured to the end walls thereof are U-shaped bearings 12, 12 for receiving the end portions of a horizontal shaft 13. On the shaft 13 adjacent the rear end of the tank 9 is a roll 14 having two rows of small projections 15, 15 circumferentially extending about its periphery for the purpose of adding traction and maintaining the roll 14 revolving as it is moved along the edge portion of a strip of roofing material.

Adjacent the roll 14 and mounted upon each side wall of the tank 9 is a frame 16 in which is mounted a smaller roll 17. These rolls are mounted so as to have their lowermost portions somewhat below the topmost portion of the roll 14.

The frames 16 are of general inverted U-shape, each having one leg spaced from the tank 9 while its other leg is attached to the tank and this latter leg has a pair of vertically spaced ears 19, 19 between which is mounted a vertically disposed roll 20 preferably smaller than the roll 17 and serving as an abutting roll for the adjacent edge of the roofing strip being cemented.

A substantially inverted V-shaped handle 21 is provided for the device, the leg portions thereof being welded or otherwise secured to the outside of the side walls of the tank 9.

Under the rolls 17, the adjacent edge portions of the tank 9 are provided with short upstanding teats 22 which serve to prevent wiping of the entire coated surface of the roofing strip against the tank.

The back end of the tank 9 has a bracket 23 in which is mounted a roller 24, while at the forward end of the tank 9 is an outstanding ear 25 having an opening therethrough for receiving the shank 26 of a caster wheel unit 27. The ear 25 is formed with an opening to slidably receive the shank 26 of the caster wheel unit 27. A horizontal threaded bore is formed in the ear to receive a set screw 28 which can be driven against the shank 26 to support the tank on a true horizontal plane regardless of the pitch of the roof.

In the operation of this device, the edge portion of the building material strip 7 is interposed between the rolls 14, 17, 17 after a quantity of cement has been placed in the tank 9.

As the machine is pushed along, the projec-

tions 15, 15 on the roll 14 will ride the roofing strip and the roll 14 will carry from the tank 9 cement and apply the same to the corresponding edge portion of the roofing strip.

While the foregoing specification sets forth the invention in specific terms, it is to be understood that numerous changes in the shape, size and materials may be resorted to without departing from the spirit and scope of the invention as claimed hereinafter.

Having described the invention, what is claimed as new is:

1. A machine for applying roofing cement to one edge of a strip of roofing material comprising a wheel-supported cement containing tank adapted to travel over a roof with one side underlying said edge of the strip, a cement applicator roller in said tank projecting peripherally above the same for engagement with the under side of said edge of the strip and mounted in said tank for rotation about an axis at a right angle to the line of travel of the tank whereby said roller is caused to roll along said edge under travel of the tank and by frictional engagement with said edge and to apply cement to said edge, a pair of idler rollers mounted on said tank upon opposite sides of the applicator roller, respectively, parallel therewith for rolling along and over said edge of the strip to hold the edge down on the applicator roller, and means on said tank for engagement with the edge of the strip to guide the tank along said edge in a course parallel therewith.

2. A machine for applying roofing cement to one edge of a strip of roofing material comprising a wheel-supported cement containing tank adapted to travel over a roof with one side underlying said edge of the strip, a cement applicator roller in said tank projecting peripherally above the same for engagement with the under side of said edge of the strip and mounted in said tank for rotation about an axis at a right angle to the line of travel of the tank whereby said roller is caused to roll along said edge under travel of the tank and by frictional engagement with said edge and to apply cement to said edge, a pair of idler rollers mounted on said tank upon opposite sides of the applicator roller, respectively, parallel therewith for rolling along and over said edge of the strip to hold the edge down on the applicator roller, and means on said tank for engagement with the edge of the strip to guide the tank along said edge in a course parallel therewith, said means comprising a pair of rollers mounted on said tank upon opposite sides of said applicator roller, respectively, and rotatable about axes at right angles to the axis of said applicator roller.

ROY A. SMITH.