United States Patent [19]

Artelt, Jr.

[11] **3,886,032**

[45] **May 27, 1975**

[54] **ADDRESSING MACHINE LABEL TRANSPORT**

[75] Inventor: **Herbert C. Artelt, Jr.**, Wildwood, Ill.

[73] Assignee: **Xerox Corporation**, Stamford, Conn.

[22] Filed: **July 10, 1972**

[21] Appl. No.: **270,387**

Related U.S. Application Data

[63] Continuation of Ser. No. 36,888, May 13, 1970, abandoned.

[52] **U.S. Cl.** **156/521**; 156/566

[51] **Int. Cl.** **B32b 31/00**

[58] **Field of Search** 156/521, 264, 250, 566, 156/520, 519

[56] **References Cited**

UNITED STATES PATENTS

3,367,822	2/1968	Hoffler	156/264
3,556,909	1/1971	Stegman	156/521
R23,512	6/1952	Von Hofe	156/521

FOREIGN PATENTS OR APPLICATIONS

1,075,668	9/1965	United Kingdom	156/521

Primary Examiner—Douglas J. Drummond

[57] **ABSTRACT**

An article addressing machine for use with a continuous strip label supply, the addressing machine having a labeling head including a label transfer wheel; transport means for supplying articles to the transfer wheel for addressing thereof, means adapted when actuated to cut one label at a time from said label supply strip; and means for transporting the labels from the cutting means to the label transfer wheel including an endless vacuum conveyor belt operating in timed relationship with said transfer wheel whereby to assure timely feed of labels to said transfer wheel and consequent proper positioning of addresses on the articles.

6 Claims, 9 Drawing Figures

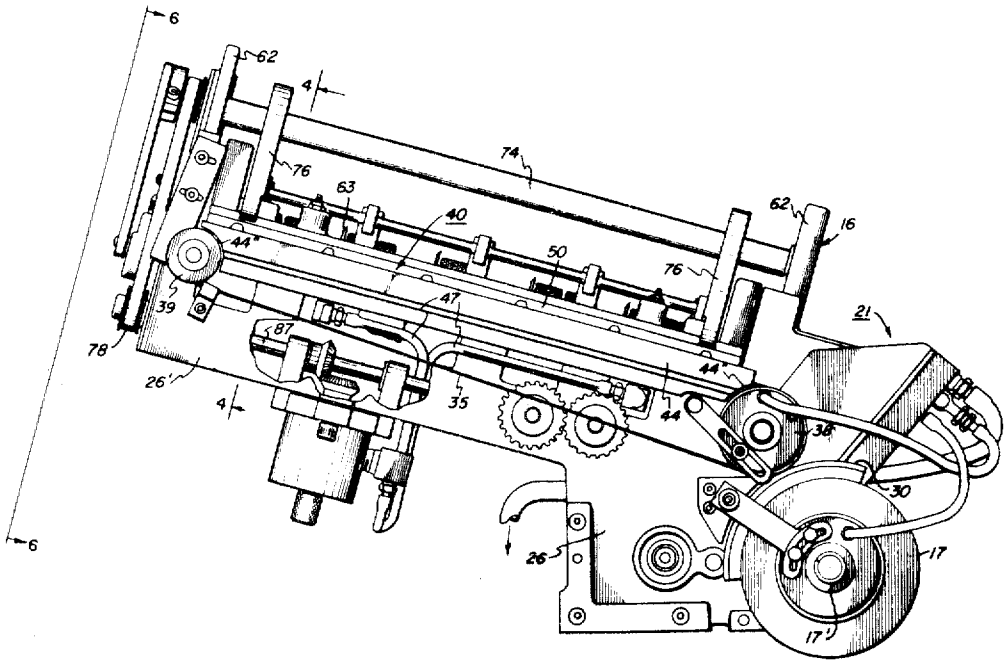

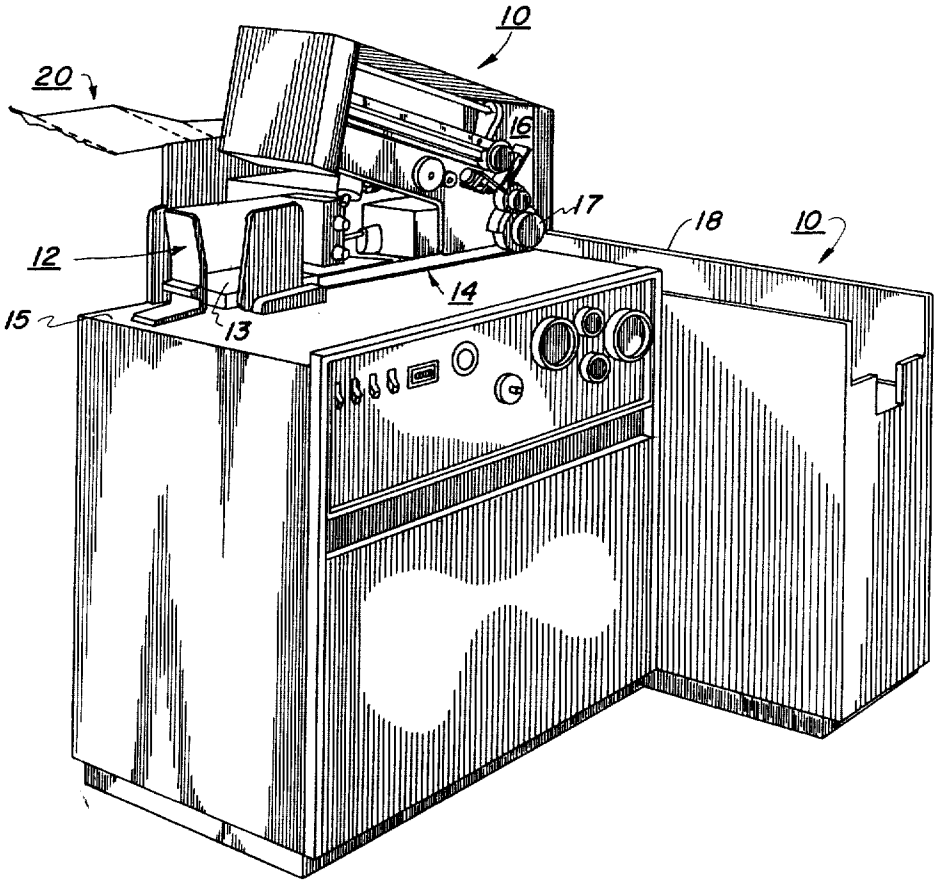

FIG. 1

INVENTOR.
HERBERT C. ARTELT JR.
BY Frederick E. McMullen
ATTORNEY

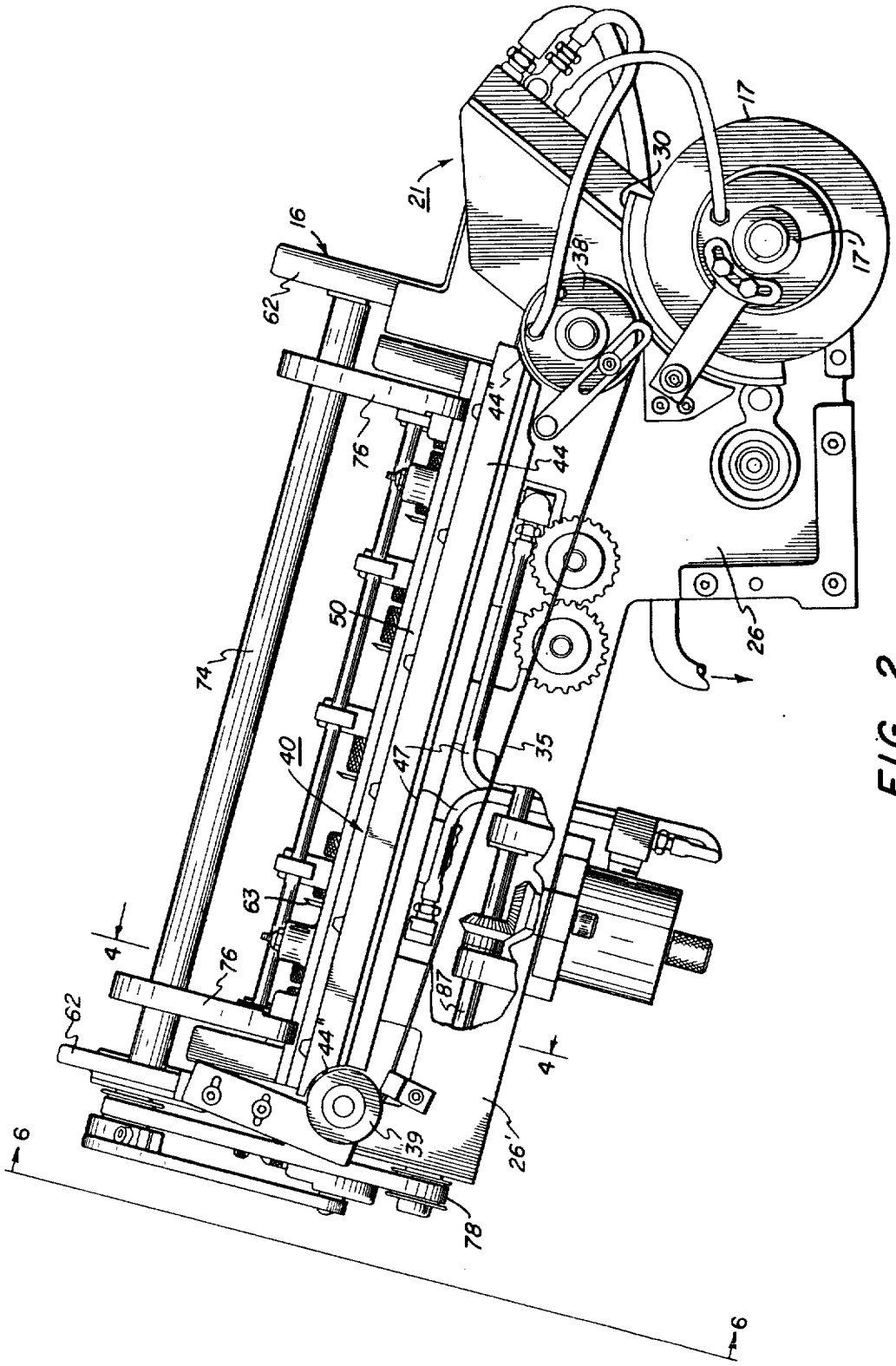
21
16
62
76
74
50
40
63
4
62
76
44'
6
39
78
26'
87
47
35
44
44'
38
30
17
17'
26
4
6

FIG. 2

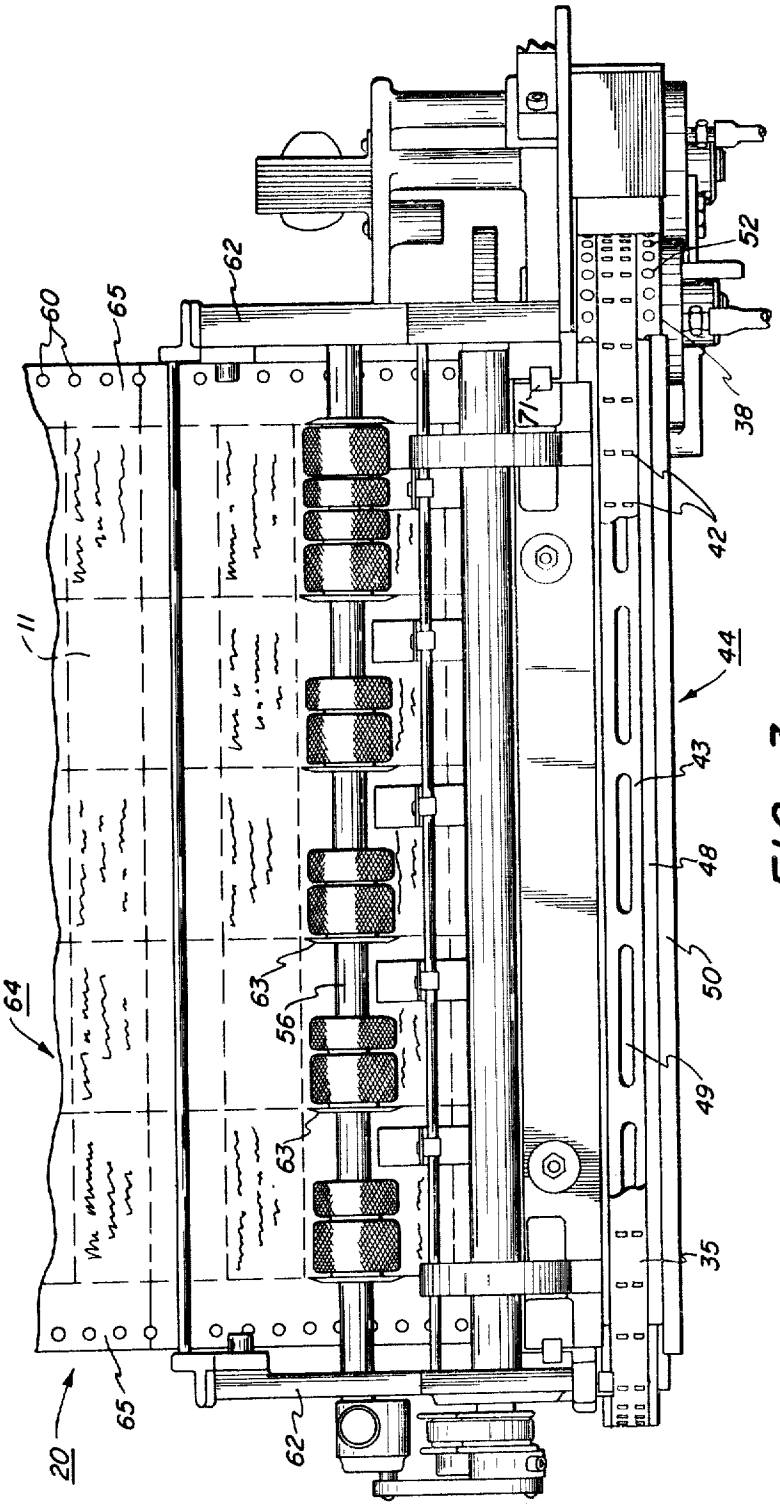

FIG. 3

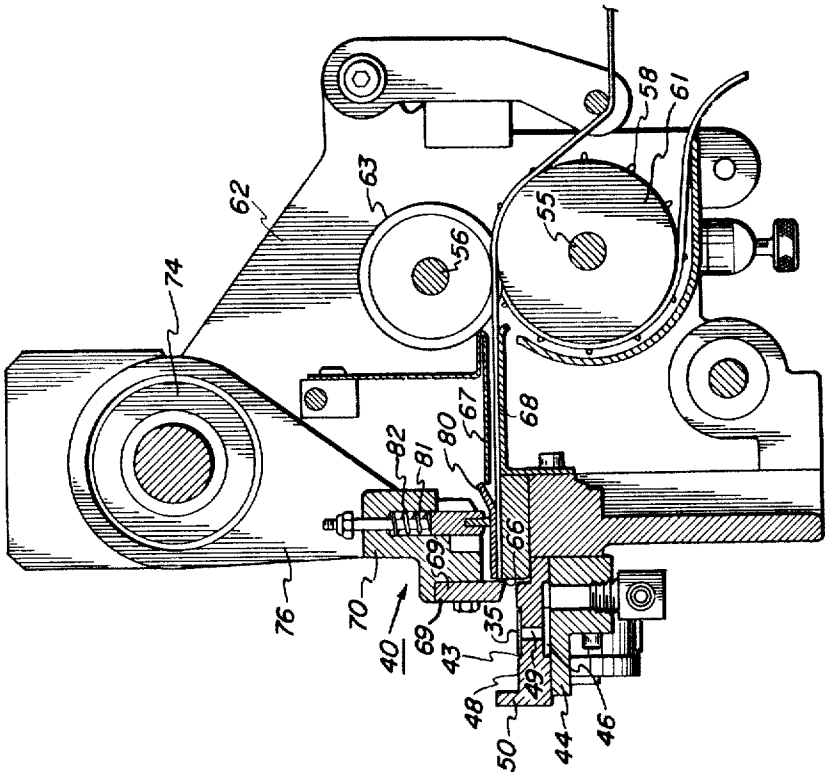
74
62
63
56
55
58
61
67
68
80
81
82
66
69
76
70
40
69
43
35
48
49
50
44
46

FIG. 4

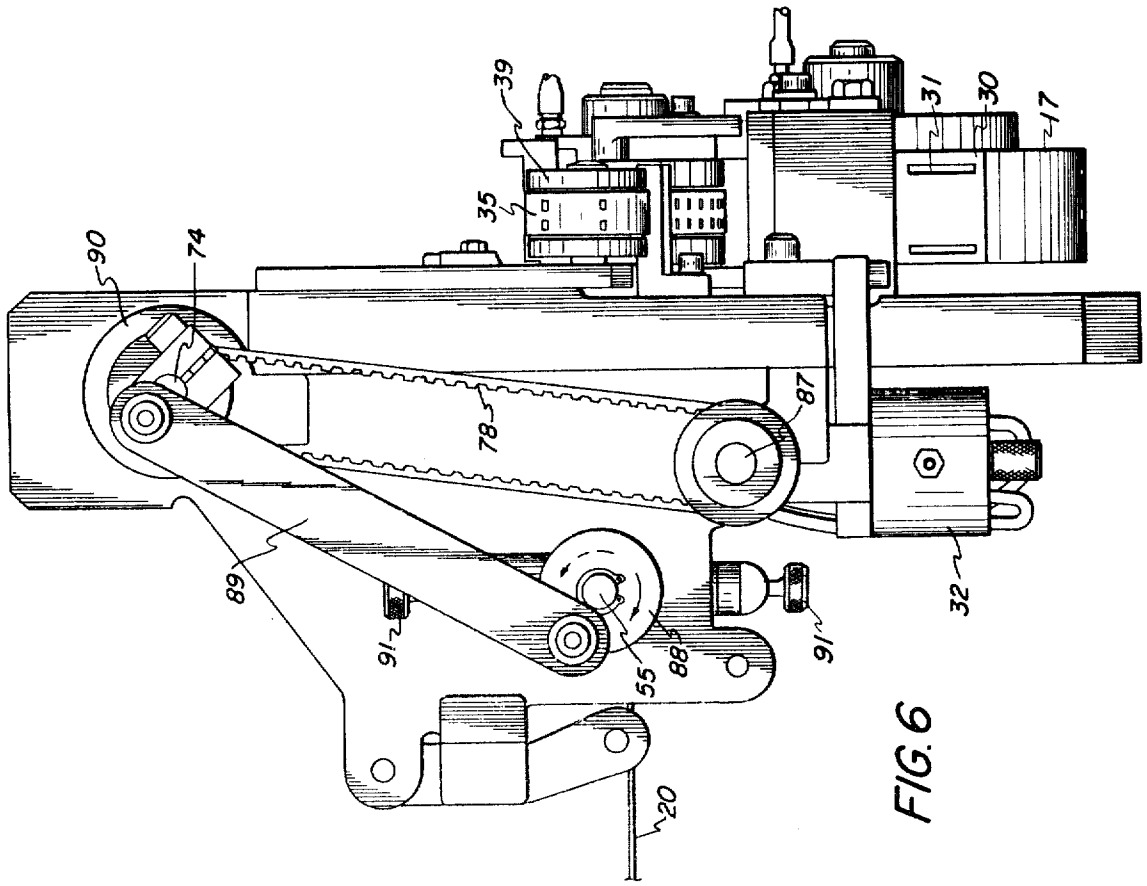
90
74
39
35
31
30
17
78
87
89
91
55
88
91
32
20

FIG. 6

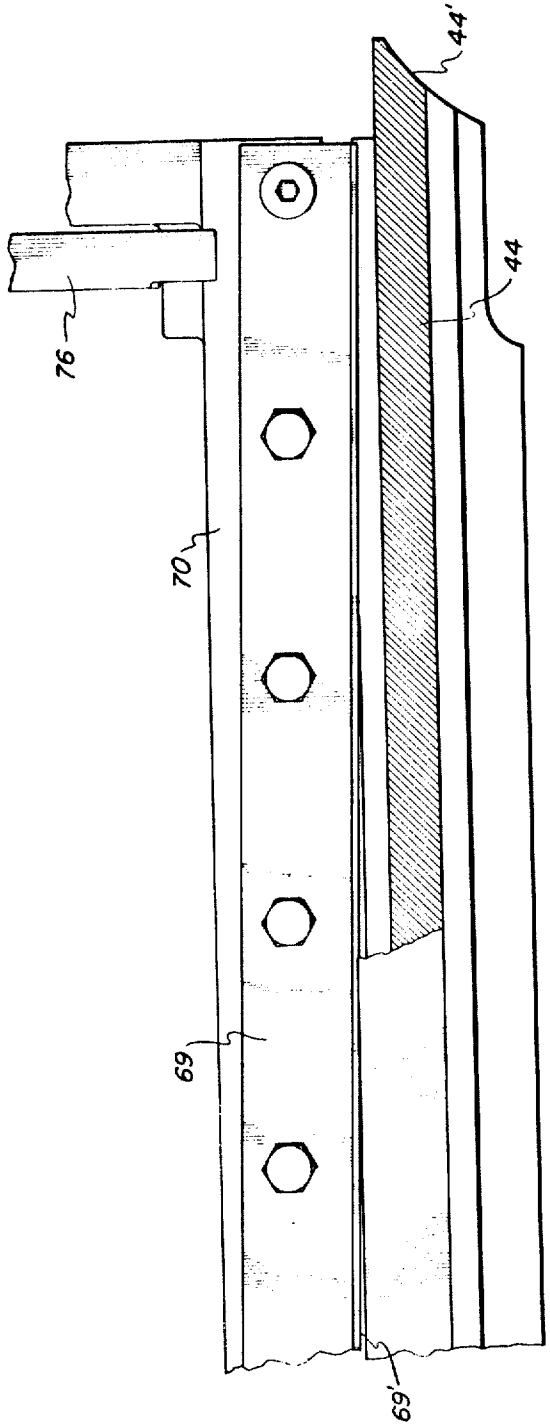

FIG. 5

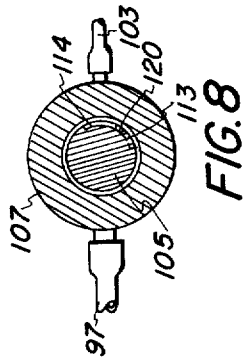

FIG. 8

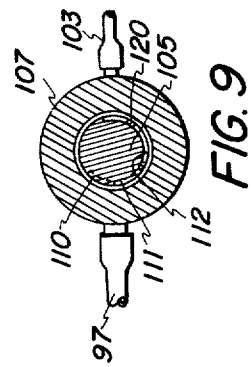

FIG. 9

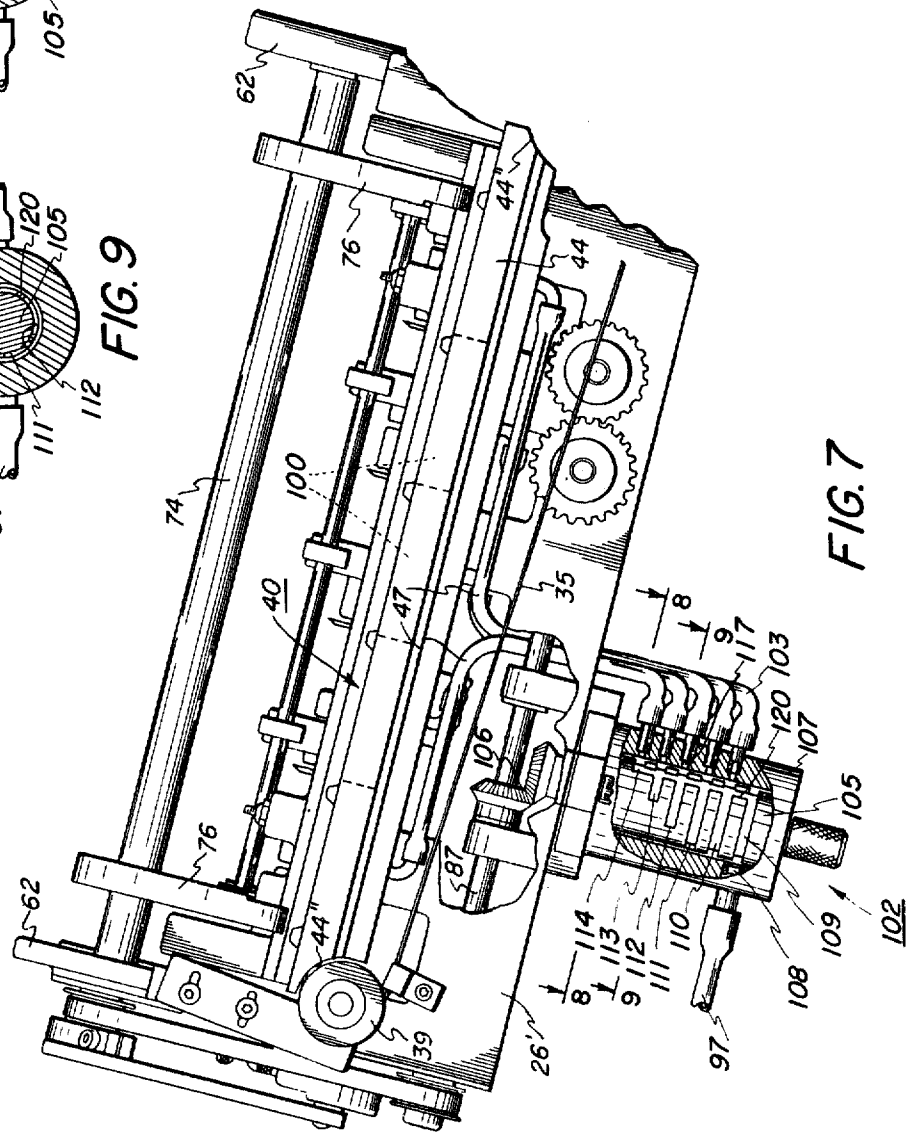

FIG. 7

ADDRESSING MACHINE LABEL TRANSPORT

This is a continuation of application Ser. No. 36,888, filed May 13, 1970, now abandoned.

This invention relates to article addressing machines, and more particularly to article addressing machines incorporating improved means for transporting labels from the label supply to the machine address transfer means.

In machines for addressing articles such as envelopes, newspapers and the like, the supply of labels is conveniently in the form of an endless strip or length of uncut labels, normally four or five abreast. Typically, these labels are generated by a computer. As can be appreciated, addressing machines in these applications include means such as knives to separate the strip into individual labels prior to use. Following separation, the individual labels are transported or carried to the machine label transfer means where the address information or the label itself is transferred to the articles.

It is a principal object of the present invention to provide a new and improved article addressing machine.

It is an object of the present invention to provide an article addressing machine incorporating improved means for transporting individual labels to the addressing machine label transfer mechanism.

It is an object of the present invention to provide an improved vacuum transport belt for feeding labels from the label source to the label transfer means of an addressing machine.

It is a further object of the present invention to provide a label transport belt with vacuum means for temporarily tacking labels to the belt.

It is an object of the present invention to provide an article addressing machine having a label transfer wheel, a scissors-like label cutter, and movable conveyor belt means at the label cutter discharge to receive the labels one by one as they are discharged from the cutter, the operating speeds of the label cutter and conveyor belt being integrated with that of the transfer wheel to provide labels to the transfer wheel in predetermined timed order.

It is an object of the present invention to provide an improved vacuum transport mechanism for supplying labels to the label transfer mechanism of an addressing machine incorporating means to control vacuum admission to the transport mechanism in accordance with movement of the labels.

This invention relates to an article addressing machine adapted for use with uncut labels in the form of a continuous strip, comprising in combination; addressing means for bringing individual labels into physical contact with the articles; means for feeding articles to the addressing means for addressing thereof; means for separating the strip into individual labels for use by the addressing means; and transport means for carrying the labels from the separating means to the article addressing means, the transport means including a movable belt-like conveyor operatively arranged adjacent the discharge side of the separating means so as to receive the labels as they are discharged by the separating means, and vacuum means for releasably tacking the labels to the conveyor belt.

Other objects and advantages will be apparent from the ensuing description and drawings in which:

FIG. 1 is an elevational view showing the addressing machine of the present invention coupled with a discharge conveyor;

FIG. 2 is a side view with parts broken away showing the addressing machine labeling head of the present invention;

FIG. 3 is a top plan view of the labeling head shown in FIG. 2;

FIG. 4 is a cross sectional view taken along lines 4—4 of FIG. 2 showing details of the label form feeding and separating mechanism together with the label transport means;

FIG. 5 is an enlarged view showing details of the labeling head guillotine;

FIG. 6 is an end view partially in section of the labeling head shown in FIG. 2 showing details of the label strip drive mechanism;

FIG. 7 is a side view with parts broken away showing a modified labeling head incorporating vacuum supply arrangement for the cut label transport belt; and

FIGS. 8 and 9 are views taken along lines 8—8 and 9—9 respectively in FIG. 7 showing details of the vacuum control valve port arrangement.

Referring to the drawings, there is shown the labeling or addressing machine, designated generally by the numeral **10**, of the present invention. As will appear more fully hereafter, addressing machine **10** serves to transfer labels **11**, or the information thereon, onto articles **13**. Labels **11** are supplied to the labeling head portion **16** of addressing machine **10** in the form of a continuous sheet **20** which usually consists of label rows **64** four or five abreast. As will appear, label sheet **20** is cut into individual labels **11** which are carried by transport belt **35** to transfer wheel **17**. Wheel **17** then transfers the label itself or the information thereon to articles **13**.

As is understood by those skilled in the addressing or labeling art, labels **11** may be physically transferred to articles **13** as by gluing. Alternately, the label information only may be tranferred to the articles. In this latter instance, wax impressions on the label are transferred with the aid of heat and pressure to the articles, the used labels preferably being collected in a suitable storage tray (not shown) for possible reuse as glued labels or simply destroyed. In this latter type of application, transfer shoe **30** of wheel **17** incorporates suitable heating means (not shown) to facilitate transfer of the label information.

Articles **13**, which may comprise envelopes, cards, newspapers, and the like, are stored in hopper **12**. Article transport **14** carries the articles **13** one at a time past transfer wheel **17** where the articles are labeled. The labeled articles may be then carried to a suitable take away conveyor **18** by transport **14**.

Addressing machine **10** has a table-like base **15** on which article hopper **12** and article transport **14** are operatively supported, the feeding surface of transport **14** being substantially level with the surface of base **15**. In this arrangement, articles **13** rest partially on the surface of base **15** as they are carried past transfer wheel **17** by transport **14**.

Referring particularly to FIGS. 2 and 3 of the drawings, transfer wheel **17** is supported by drive shaft **17'**. Shaft **17'** is rotatably journaled in the frame member **26** of labeling head **16**. Frame member **26** is in turn mounted on base **15** adjacent transport **14**. Transfer wheel **17** has a curved label transfer shoe **30** mounted on the periphery thereof and extending partially about

the circumference of wheel **17**. Wheel **17** is supported on frame member **26** opposite a suitable pressure roll (not shown) carried by base **15** and between which articles **13** are carried by transport **14**. Suitable adjusting means (not shown) may be provided to enable the spacing between transfer wheel shoe **30** and the surface of the pressure roll to be varied to accommodate different thickness articles and different pressure requirements.

Vacuum holddown ports **31** (shown in FIG. **6**) open to the periphery of shoe **30**. Ports **31** communicate via suitable control valve means (not shown) with a vacuum source to provide vacuum to the periphery of label transfer shoe **30** for temporarily attaching labels **11** to shoe **30** during the labeling process.

In applications where labels **11** are physically attached to articles **13** as by gluing, vacuum holddown ports **31** of transfer shoe **30** are opened to the vacuum source as shoe **30** moves from a point opposite lower drive pulley **38** of label transport **35** to the area opposite article transport **14**. In applications where the label information only is transferred, the vacuum control valve means in transfer wheel **17** may be altered to sustain vacuum to ports **31** of shoe **30** until shoe **30** is past the label transfer point. This facilitates removal of the used labels from the transfer area and deposit in a used label storage tray when used.

It is understood that in applications where labels **11** are physically attached to articles **13**, a suitable glue dispenser or applicator, such as a dispensing roller (not shown), is provided to coat the underside of the label with adhesive prior to contact of the label with the article being addressed. In this application, the glue dispensing roller is normally disposed above article transport **14** and to the left of transfer wheel **17** as seen in FIG. **2** of the drawings.

Label transport belt **35** is supported by a pair of pulleys **38, 39** rotatably jounaled on frame member **26**. Lower pulley **38**, which as will appear comprises the drive pulley for belt **35**, is arranged proximate the path of movement of transfer wheel shoe **30**. Pulley **39**, which comprises an idler pulley, is supported at the remote end **26'** of frame member **26** just beyond the effective cutting width of guillotine **40**.

Referring particularly to FIGS. **2–4** of the drawings, transport belt **35** comprises a flexible belt perforated at spaced points along its length. The upper run of label transport belt **35** rides in recess **43** of elongated vacuum distributing member or distributor **44** secured to frame **26** underneath the discharge side of guillotine **40**. Vacuum distributing member **44** is sized to extend substantially the full distance between pulleys **38, 39**, ends **44'** of member **44** being suitably curved to mate with the curved portions of pulleys **38, 39** opposite thereto. The label supporting surface **48** of vacuum distributing member **44** is substantially flat with belt recess **43** extending centrally along the length thereof, the depth of recess **43** being such that the upper surface of belt **35** is substantially level with or slightly higher than the surface **48** of member **44**. As best seen in FIG. **4**, a raised outer lip **50** is provided along the outer edge of label supporting surface **48**. The inside edge of label supporting surface **48** is defined by the lower cutting edge **66** of guillotine **40** extending therealong.

Vacuum distributing member **44** has a vacuum chamber **46** therein communicated through distributor hoses **47** with a vacuum source, represented by supply hose **97**. A series of vacuum ports **49** are provided along the length of transport belt recess **43** to supply vacuum from chamber **46** to label transport belt **35** as belt **35** moves along recess **43**. As can be understood, this arrangement provides, in cooperation with perforations **42** in belt **35**, vacuum along the upper run of belt **35** to tack or attach the labels to belt **35** following operation of guillotine **40** and enable belt **35** to transport the labels laterally to transfer wheel **17**.

Lower drive pulley **38** has vacuum ports **52** (best seen in FIG. **3**) opening to the periphery thereof to provide holddown vacuum for carrying the labels therealong to transfer wheel **17**. Suitable vacuum control means (not shown) serve to control vacuum admission to ports **52** so as to provide vacuum to the periphery of pulley **38** in the area extending from vacuum distributing member **44** to a point opposite label transfer wheel **17**.

Referring particularly to FIGS. **3** and **4**, a pair of shafts **55, 56** are rotatably journaled on rear supports **62** of labeling head frame member **26**. A pair of feed sprockets **58** are secured to lower shaft **55**, sprockets being arranged to engage perforations **60** in margins **65** of label form **20**. In addition, shaft **55** has mounted at spaced points therealong roller anvils **61**, the number and position of anvils **61** corresponding to the points where form **20** is to be slit longitudinally into label rows **64** and margins **65** removed. Upper shaft **56** has mounted thereon opposite ends of the roller anvils **61** and in cutting relationship thereto disc-like slitters **63**. As can be understood, slitters **63** cooperate with anvils **61** to slit label form **20** in a lengthwise direction to thereby remove margins **65** and separate form **20** into individual rows **64**. Label rows **64** are subsequently cut into individual labels **11** by guillotine **40**. As will appear, shaft **55** is intermittently rotated to advance label sheet **20** toward guillotine **40**, shaft **56** being suitably geared to shaft **55** for concurrent rotation therewith.

To support the slitted label form as the form feeds toward guillotine **40**, frame member **26** is provided with a relatively smooth lower guiding base **68** which extends to vacuum distributing member **44** and forms the lower cutting edge **66** of guillotine **40**. Spaced upper guides **67** cooperate with base **68** to guide the label rows **64** to guillotine **40**.

In addition to lower cutting edge **66**, guillotine **40** includes an upper knife **69**. Knife **69** is carried by part **70** slidably supported for up and down movement in vertical grooves **71** in labeling head frame member **26**. Upper knife part **70** is reciprocated by means of an eccentric shaft **74** rotatably journaled in frame extensions **62** and connected to part **70** by links **76**. Links **76** are journaled on eccentric shaft **74** by suitable bearing means (not shown) and are secured to part **70** by suitable pin means. As will appear, eccentric shaft **74** is driven in unison with vacuum drive pulley **38** from drive belt **78**, shown in FIG. **6**.

To maintain the slitted label sheet stationary during operation of guillotine **40**, collapsible braking members **80** are suspended from the lower surface of knife part **70**. Braking members **80**, which are slidably received in recesses **81** in part **70**, are biased downwardly by springs **82** toward guiding base **68**. As can be understood, on movement of part **70** toward base **68**, braking members **80** first contact the slitted label sheet **20** to hold sheet **20** stationary during operation of guillotine **40**.

To correlate feed of labels **11** with cyclic operation of label transfer wheel **17**, the cutting edge **69'** of knife **69** is angled so that knife **69**, during the cutting stroke thereof, cuts in a scissors-like fashion from right to left as viewed in FIGS. **2** and **5**. Labels **11** are accordingly cut off one by one so that there results on label transport belt **35**, which is continuously driven, a series of labels **11** spaced a predetermined distance from one another. It is understood that the relative operating speeds of the several component parts of labeling head **16** including guillotine **40** and transport belt **35** are chosen to provide predetermined spacing between the labels **11** on transport belt **35** as will assure a continuous supply of labels to shoe **30** of transfer wheel **17**, each label being positioned on shoe **30** in proper location for transfer of the label itself, or the address information therefrom, onto articles **13** as the articles are brought forward by article transport **14**.

Addressing machine **10** is driven by a suitable motor (not shown), there being suitable power transfer means from the machine motor to article transport **14** and to transfer wheel shaft **17'** in labeling head **16**. Suitable clutch means (not shown) may be provided to interrupt drive to transfer wheel **17** in the event of failure of interruption in the supply of articles being labeled.

Head drive shaft **87** extends laterally along labeling head **16** and is suitably journaled in frame member **26** thereof. Both vacuum drive pulley **38** and shaft **87** are drive from transfer wheel shaft **17'** through suitable power transfer means such as gears (not shown) at a speed sufficient to assure a continuous supply of cut labels to transfer wheel **17**. Shaft **87** drives eccentric shaft **74** by means of drive belt **78**.

Referring particularly to FIG. **6**, sprocket shaft **55** has an adjustable ratchet type input clutch **88** supported on the outermost end thereof. Clutch **88** is driven in oscillating fashion by eccentric shaft **74** through link **89** which is pinned off-center to eccentric shaft pulley **90** and to clutch **88**. Slitter shaft **56** is geared to rotate in unison with but in a direction opposite to sprocket drive shaft **55**.

Clutch **88** includes a suitable adjustable screw **91** to enable one-way driving arc of clutch **88** to be adjusted. As is apparent, on rotation of eccentric shaft **74** by drive belt **78** to operate guillotine **40**, eccentric **89** first turns the input member of clutch **88** in a forward or label sheet feeding direction (the direction shown by the solid line arrow in FIG. **6**). Clutch **88** accordingly engages to drive sprocket shaft **55**, which in turn drives slitter shaft **56** to advance label sheet **20**, the duration of engagement of clutch **88** being adjusted to advance label sheet **20** one label width. The continued rotation of eccentric shaft **74** operates guillotine **40** to cut off the label width advanced thereunder, the cut labels dropping onto transport belt **35**. While guillotine **40** is operated, drive link **89** reverses the drive to clutch **88** (the direction shown by the dotted line arrow in FIG. **6**) to interrupt power to shafts **55**, **56** and advance of label sheet **20**.

OPERATION

During operation of addressing machine **10**, a supply of articles **13** to be labeled is provided in hopper **12**, it being understood that hopper **12** is adjustable to accommodate the various size articles. Article transport **14** feeds articles **13** singly from hopper **12** to transfer wheel **17** where the articles are labeled, the labeled articles being discharged by transport **14** onto the takeaway conveyor **18**.

At the same time, labeling head **16** operates to supply labels **11** from form **20** to transfer wheel **17**. Wheel **17** in turn serves to transfer the labels **11** or the address information therefrom, onto articles **13**.

With operation of addressing machine **10**, clutch **88** of labeling head **16**, which is drivingly connected to head drive shaft **87** via drive belt **78** and link **89**, serves to index sprocket drive shaft **55** forward once each revolution of shaft **87** to advance label form **20** one label width. As label form **20** advances, slitters **63** on shaft **56** cut form **20** longitudinally to remove margins **65** and separate form **20** in label rows **64**. At the same time, the previously slitted leading end of form **20** advances under guillotine **40** and over belt **35** where the label rows **64** are cut in succession by guillotine knife **69** into individual labels **11**.

It is understood that vacuum from distributing member **44** serves, through the medium of perforations **42** in belt **35**, to temporarily tack labels **11** to the portion of belt **35** moving underneath guillotine **44**. As the labels on belt **35** reach drive pulley **38**, the vacuum supply to ports **49** in pulley **38** retains the labels on periphery of pulley **38** until the labels come opposite the rotating transfer shoe **30** at which point the vacuum supply to ports **49** of pulley **38** is shut off to permit the labels to be transferred from belt **35** and pulley **38** to transfer wheel shoe **30**. It is understood that vacuum holddown ports **31** in shoe **30** are opened to the vacuum source as transfer wheel shoe **30** comes opposite drive pulley **38** by the transfer wheel vacuum control valve means (not shown).

The label supply means, that is, strip feed sprockets **58**, guillotine **40** and label transport belt **35** are driven in unison with transfer wheel **17** at speeds chosen to provide an uninterrupted supply of cut labels to transfer wheel **17**, such that each label is correctly positioned on transfer wheel shoe **30** for transfer of the label itself, or the information therefrom, onto the articles **13** as they are brought forward by transport **14**.

While a five row label form **20** is illustrated herein, it is understood that form **20** may comprise one or more rows. Where a different type and size label form is employed, form feed sprockets **58** and the cooperating anvils and slitters **61**, **63** respectively are adjusted on their respective shafts **55**, **56** to correlate their position with the specific label form used. In addition, corresponding adjustments in the relative operating speeds of the various components of labeling head **16** may be contemplated with different types and sizes of label forms to assure a continuous and properly spaced supply of labels to transfer wheel **17**.

Referring now to the modified labeling head shown in FIGS. **7**, **8** and **9**, wherein like numerals refer to like parts, a modified vacuum distributing member **44'** is provided, member **44'** being comprised of plural, separate vacuum chambers **100** each communicated with the vacuum supply hose **97** through control valve **102** and individual vacuum lines **103**. As will appear more fully, the number of vacuum chambers **100** equal the number of label rows **64**. Vacuum ports **49** in recess **43** of distributing member **44'** are provided for each chamber **100**, the ports for each chamber **100** being arranged in the surface of member **44'** substantially in line with the label row associated with that chamber.

Control valve **102** includes a rotatable valve spool **105** driven in unison with labeling head **16** by head drive shaft **87** through gear set **106.** Valve spool **105** rides in a cylindrical valve body **107** having vacuum admission port **108** therethrough opposite recess **109.** Port **108** communicates with vacuum supply hose **97.**

Valve spool **105** includes a lower vacuum supply recess **109** extending completely around the periphery thereof, opposite to and in open communication with supply port **108.** Plural vacuum distributing recesses **110, 111, 112, 113** and **114,** each of a predetermined arcuate length as will appear more fully, are provided opposite ports **117** in valve body **107.** Ports **117** communicate via distributor lines **103** with the individual vacuum chambers **100** in distributing member **44.** Recess **120** in spool **105** communicates supply recess **109** with recesses **110, 111, 112, 113** and **114.**

As can be understood, vacuum from supply hose **97** is continuously admitted to the valve body **107.** As spool **105** rotates in operative unison with labeling head **16,** vacuum chambers **100** are communicated with the vacuum source for predetermined intervals during each revolution of spool **105** as determined by the arcuate extent of the several recesses **110, 111,** 112, 113 and **114.** And, as is apparent, the vacuum supply to member **44'** is totally interrupted for a short interval just prior to descent of guillotine knife **69.**

As best seen in FIGS. **7** and **8,** the individual vacuum distributing recesses **110, 111, 112, 113** and **114** are of varying arcuate extent, with that of recess **110,** which serves the vacuum chamber **100** nearest lower drive pulley **38** being the longest. The arcuate extent of the remaining recesses **111, 112 113** and **114** progressively decrease. By this construction, the interval during which the vaccum chambers **100** are open to the vacuum source is varied in correspondence with actual label feeding requirements with the result that the chamber **100'** farthest from transfer wheel **17** is open to the vacuum source for only a very short interval. The remaining vacuum chambers are open to the vacuum source for progressively greater intervals, the vacuum chamber closest transfer wheel **17** being open to the vacuum source for the longest interval.

It is understood that chambers **100** need only be open to the vacuum source for a period sufficient to feed labels **11** thereover. Once the last label has past, the vacuum supply may be interrupted until the next cutting cycle. By terminating the vacuum supply to the various chambers **100** as the labels move therepast, vacuum is conserved and any tendency for the slitted label form to become prematurely tacked to belt **35** as the slitted form **20** is advanced under guillotine knife **69** for the next cutting cycle is obviated.

The operation of the modified labeling head shown in FIGS. **7–9** of addressing machine **10** is the same as that described heretofore except that communication between the chambers **100** of distributing member **44'** and the vacuum source (represented by supply hose **97**) is progressively interrupted by control valve **102** as the last label generated during each cutting cycle of guillotine **40** moves therepast in the direction of transfer wheel **17.** Specifically, during the cutting stroke of guillotine knife **69,** the several chambers **100** of vacuum distributing member **44'** are open to the vacuum source by valve **102.** As the labels are cut by guillotine **40,** they drop in succession (from right to left in FIG. 7) onto the moving belt **35** in the predetermined spaced order described heretofore. Vacuum admitted to belt **35** via perforations **42** of belt **35** and ports **49** in distributing member **44'** serves to tack the labels to belt **35** and thereby assure positive transport of the labels in predetermined spaced relationship forward to transfer wheel **17** (from left to right in FIG. **7**).

As the last label passes beyond each vacuum chamber, valve **102,** which is driven in timed relationship with labeling head **16** from gear set **106,** terminates the vacuum supply to that chamber. This obviates any tendency for the ends of the slitted label form to become prematurely tacked to the moving conveyor belt **35** as the label form **20** is advanced forward under guillotine knife **69** with possible misaligned cutting of the labels by guillotine **40.** At the same time, the vacuum supply is conserved.

It is understood that where different types and size label forms are used, the arrangement and number of vacuum chambers **100** in vacuum distributing member **44'** as well as the porting arrangement and timing of control valve **102** would be altered to correspond with the specific form used.

Initial feeding of the slitted label form **20** under knife **69** of guillotine **40** may occur prior to feeding of the last label generated by the previous cutting cycle of guillotine **40** and termination of the vacuum supply to all of the vacuum chambers in distributing member **44'.** In that circumstance, the labels remaining on belt **35** from the previous cutting cycle effectively prevent premature tacking of the advancing label form to belt **35** in those areas where vacuum is still supplied to distributing member **44'.** And, as described heretofore, valve **102** terminates the vacuum supply to those chambers with passage of the last label therebeyond.

While the invention has been described with reference to the structure disclosed, it is not confined to the details set forth; but is intended to cover such modifications, or changes as may come within the scope of the following claims.

What is claimed is:

1. In an article addressing machine adapted for use with uncut labels in the form of a continuous strip arranged in at least two longitudinally extending rows, said machine including addressing means for bringing individual labels into physical contact with said articles, with means for feeding said articles to said addressing means for addressing thereof, the combination of:

means for separating said strip into individual labels for use by said addressing means,

transport means for carrying said labels from said separating means to said article addressing means, said transport means including a movable belt-like conveyor operatively arranged adjacent the discharge side of said separating means so as to receive said labels as they are discharged by said separating means, and vacuum means for releasably tacking said labels to said conveyor belt

means for feeding said strip forward to said separating means, said separating means including first knife means adapted to cut said strip longitudinally between said label rows as said strip is fed forward to said separating means by said strip feeding means, said spearating means including second knife means downstream of said first knife means for cutting said strip transversely into individual labels, said conveyor belt extending across the discharge side of said second knife means whereby to

receive said labels as they are discharged by said second knife means; and

drive means for said addressing machine having means for moving said conveyor belt and said separating means in timed relation with said addressing means, said second knife means being adapted to cut in scissors-like fasion transversely across said label form so that said labels are deposited on said moving conveyor belt in predetermined spaced relationship for use by said addressing means.

2. In an article addressing machine adapted for use with uncut labels in the form of a continuous strip, the labels being arranged in at least two longitudinally extending rows, said machine including addressing means for bringing individual labels into physical contact with said articles, with means for feeding said articles to said addressing means for addressing thereof, the combination of:

means for separating said strip into individual labels for use by said addressing means, and

transport means for carrying said labels from said separating means to said article addressing means, said transport means including a movable belt-like conveyor operatively arranged adjacent the discharge side of said separating means so as to receive said labels as they are discharged by said separating means, and vacuum means for releasably tacking said labels to said conveyor belt, said conveyor belt having vacuum holddown perforations therethrough, said vacuum means including a vacuum distributor extending across the discharge side of said separating means over which said conveyor belt runs, said distributor having individual vacuum port means opposite each of said label rows leading to said conveyor belt whereby vacuum is supplied to said belt to enable labels discharged by said separating means to be attached thereto, and valve means for controlling admission of vacuum to said distributor port means.

3. The addressing machine according to claim **2** in which said separating means is cyclicly operated to generate said labels intermittently;

said valve means including means for controlling admission of vacuum to each of said distributor vacuum port means, and means for operating said valve means in timed relationship with said addressing machine whereby said valve means operates to interrupt the supply of vacuum to each of said distributor vacuum port means following movement of the last label in each cycle therepast.

4. In an article addressing machine adapted for use with uncut labels in the form of a continuous strip the labels being arranged in at least two longitudinally extending rows, said machine including addressing means for bringing individual labels into physical contact with said articles, with means for feeding said articles to said addressing means for addressing thereof, the combination of:

means for separating said strip into individual labels for use by said addressing means;

transport means for carrying said labels from said separating means to said article addressing means, said transport means including a movable belt-like conveyor operatively arranged adjacent the discharge side of said separating means so as to receive said lables as they are discharged by said separating means, and vacuum means for releasably tacking said labels to said conveyor belt;

means for feeding said strip forward to said separating means, said separating means including first knife means adapted to cut said strip longitudinally between said label rows as said strip is fed forward to said separating means by said strip feeding means, said separating means including second knife means downstream of said first knife means for cutting said strip transversely into individual labels, said conveyor belt extending across the discharge side of said second knife means whereby to receive said labels as they are discharged by said second knife means;

said means to separate said label strip longitudinally comprising second knife means upstream of said first mentioned knife means for cutting said label strip longitudinally between said label rows whereby said first mentioned knife means discharges individual labels onto said conveyor belt operating run for movement toward said transfer row; and

means for driving said conveyor belt and said first mentioned knife in timed relation with one another, said first mentioned knife means being adapted to cut said label strip in scissors-like fasion so that individual labels are deposited on said moving conveyor belt operating run in predetermined spaced relationship for use by said transfer member.

5. In an article addressing machine adapted for use with an uncut label strip, the labels being arranged on the strip in at least two longitudinally extending rows, said machine including a rotatable transfer member for bringing labels into physical contact with the articles being addressed with means for feeding said articles to said transfer member for addressing thereof, the combination of:

means for separating said label strip into individual labels for use by said transfer member;

means for moving said label strip through said separating means and to said transfer member whereby to provide separated labels to said transfer member, said separating means including knife means adapted to cut said label strip transversely between adjoining labels, said label strip moving means including a movable belt-like conveyor upstream of said transfer member operatively arranged with an operating run of said belt extending along the discharge side of said knife means in a direction generally paralleling the cutting line of said knife means so as to receive label strip cut by said knife means and carry the cut label strip toward said transfer member; and

vacuum means for releasably tacking said cut label strip to said conveyor belt operating run;

said conveyor belt having vacuum hold-down perforations therethrough, said vacuum means including a vacuum distributor extending below the discharge side of said knife means over which said conveyor belt operating run rides, said distributor having individual vacuum port means for each of said label rows whereby to enable vacuum to be supplied to selected areas of said belt run and permit attaching of cut label strip from individual label rows to said belt run to be controlled, and valve

means for controlling admission of vacuum to said distribution port means.

6. The addressing machine according to claim **5** in which said separating means and said label strip moving means including said conveyor belt are cyclically operated in timed relationship with said transfer member whereby to supply individual labels to said transfer member;

and means for operating said valid means in response to movement of said conveyor belt whereby to interrupt the supply of vacuum to each of said individual distributor vacuum port means as the trailing edge of said cut label strip on said belt operating run moves therebeyond to thereby prevent premature tacking of the next succeeding label strip cut by said knife means to said belt run.

* * * * *