US 20070114202A1

(19) **United States**

(12) **Patent Application Publication** (10) **Pub. No.: US 2007/0114202 A1**

Lee (43) **Pub. Date: May 24, 2007**

(54) **SPORTS WATER BOTTLE**

(76) Inventor: **Yu-Yuan Lee**, Tainan (TW)

Correspondence Address:
COOPER & DUNHAM, LLP
1185 AVENUE OF THE AMERICAS
NEW YORK, NY 10036

(21) Appl. No.: **11/284,063**

(22) Filed: **Nov. 21, 2005**

Publication Classification

(51) **Int. Cl.**

B65D 51/16		(2006.01)
B65D 55/16		(2006.01)
B65D 83/00		(2006.01)

(52) **U.S. Cl.** **215/311**; 215/306; 215/388

(57) **ABSTRACT**

A sports water bottle includes a container, a lid, a resilient member and a spout. The lid is mounted onto the container detachably and has a tube and an upper rim. The tube has an outer surface. The upper rim is formed around the outer surface, has an inner surface and defines a recess. The resilient member has a stationary end and a slidable end. The stationary end is mounted on the inner surface of the upper rim. The slidable end is mounted in the recess. The spout is mounted onto the lid slidably and inserted into the tube. The slidable end of the resilient member can be pushed to bend up the resilient member to push up the spout to drink water from the container. Pushing the stationary end of the resilient member is a more sanitary way to push up the spout.

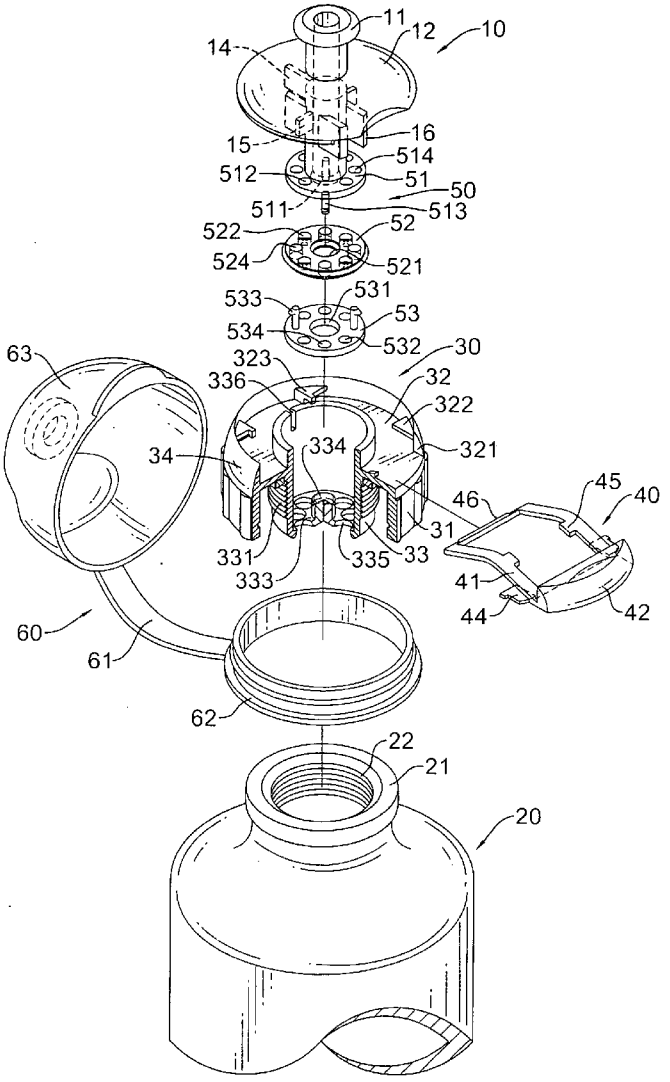

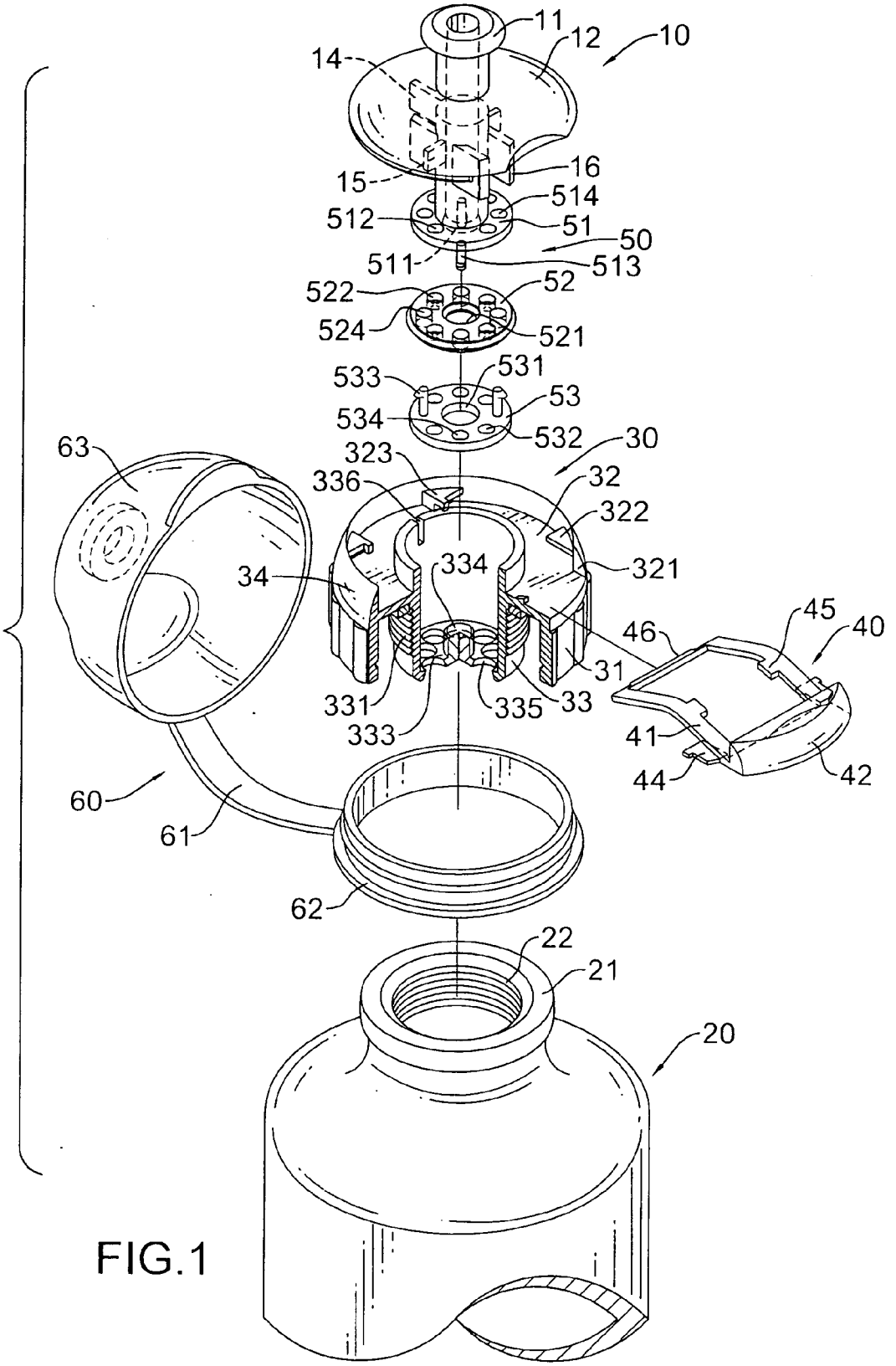
11
12
10
14
16
15
514
512
51
50
511
513
522
52
524
521
533
531
53
534
532
30
63
323
336
32
322
334
321
34
45
40
46
31
331
335
33
333
41
44
42
60
61
62
22
21
20

FIG.1

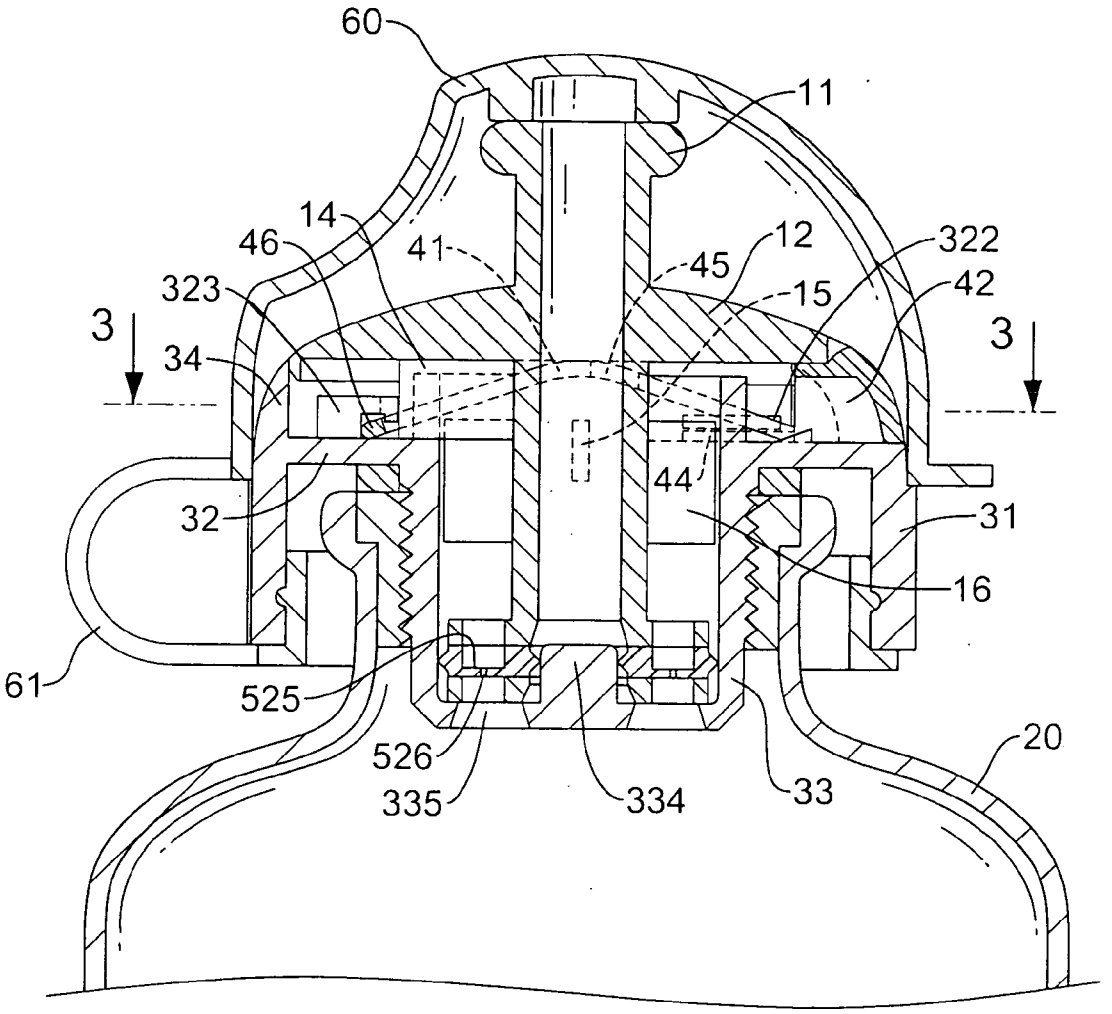
60
11
14
46
41
12
322
323
45
15
42
3
3
34
44
32
31
16
61
525
526
335
334
33
20

FIG.2

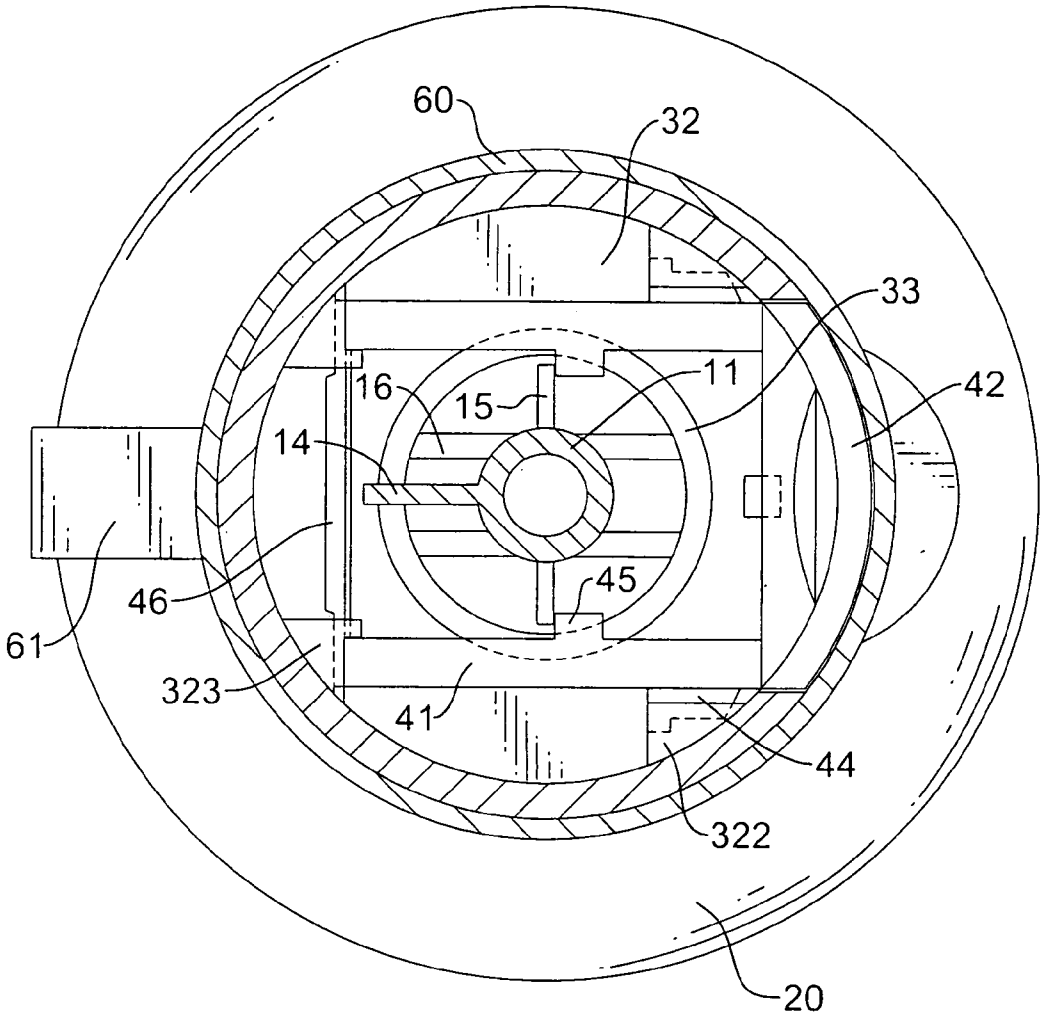

FIG.3

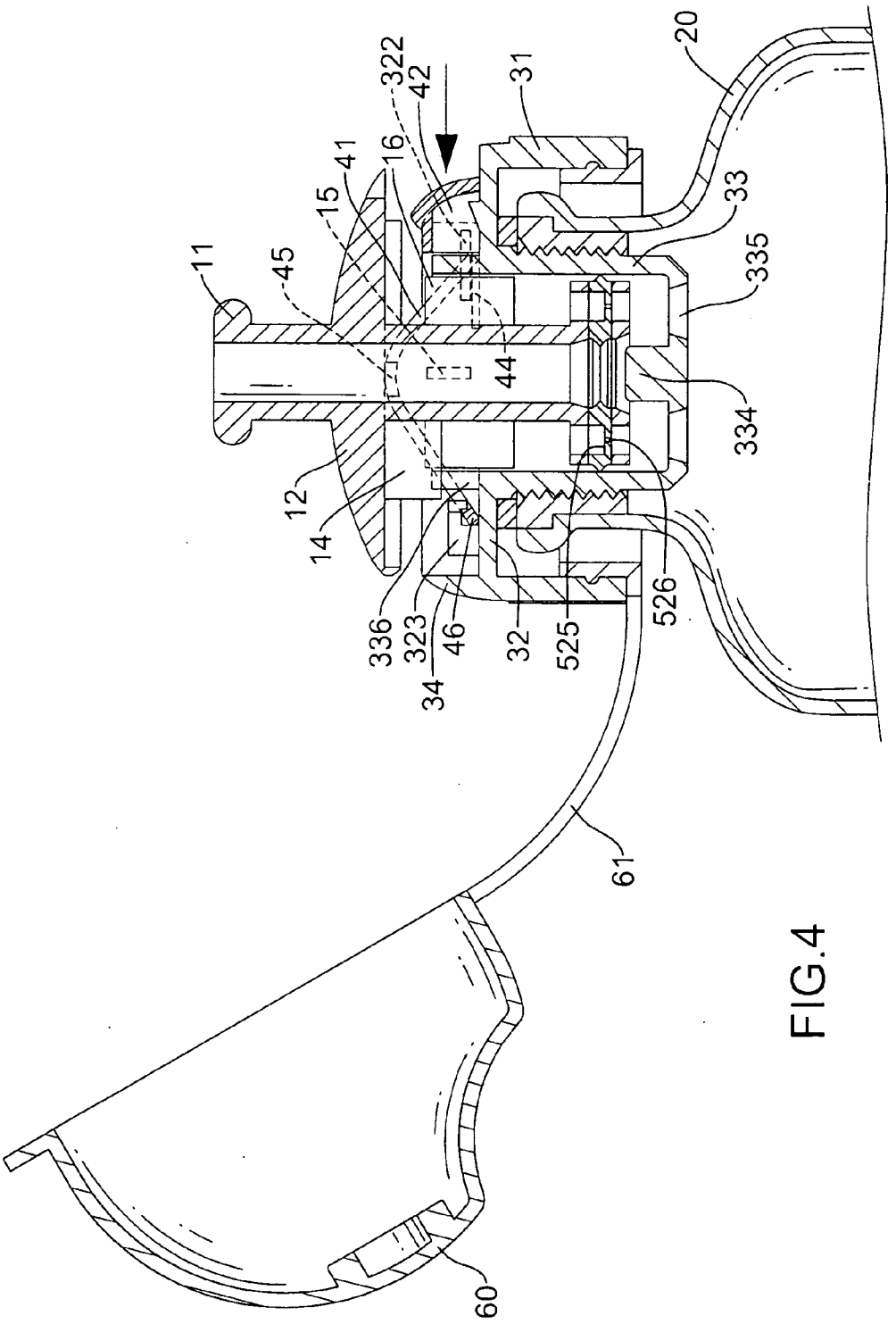
20
322
42
31
41
16
15
33
11
45
335
44
334
12
14
336
323
46
32
525
526
34
61
60

FIG.4

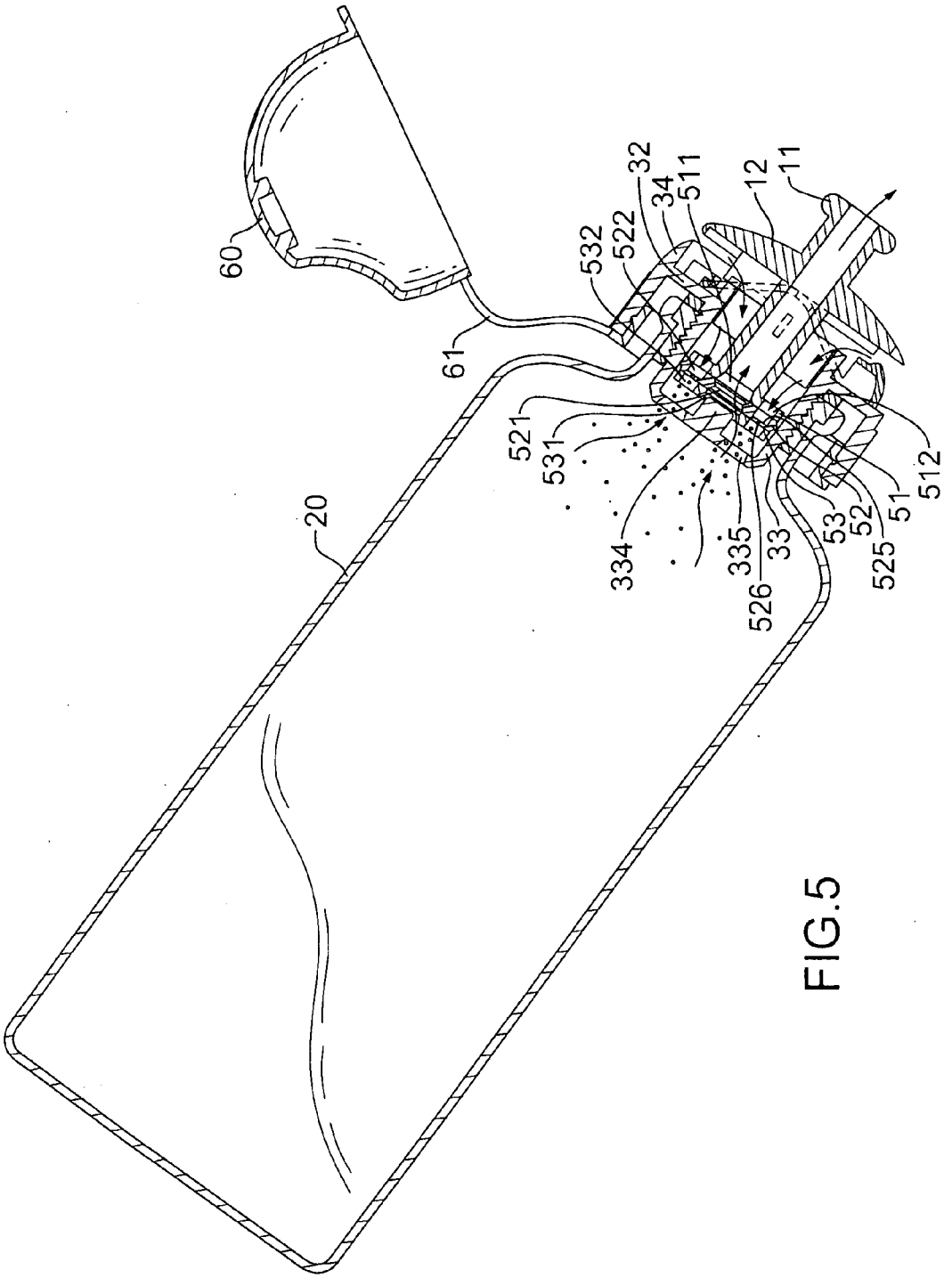
60
61
20
32
34
511
12
11
532
522
521
531
334
335
33
526
53
52
51
525
512

FIG.5

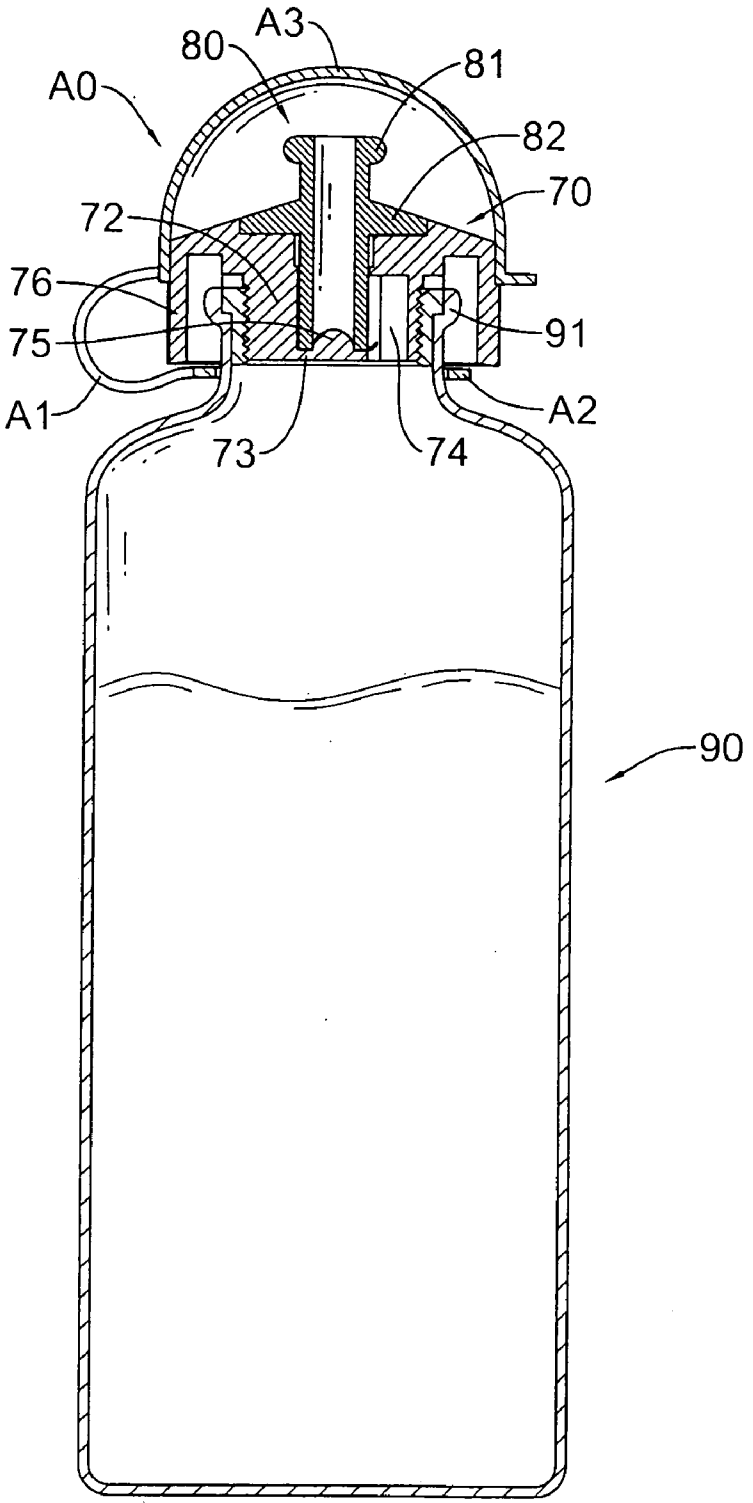

FIG.6
PRIOR ART

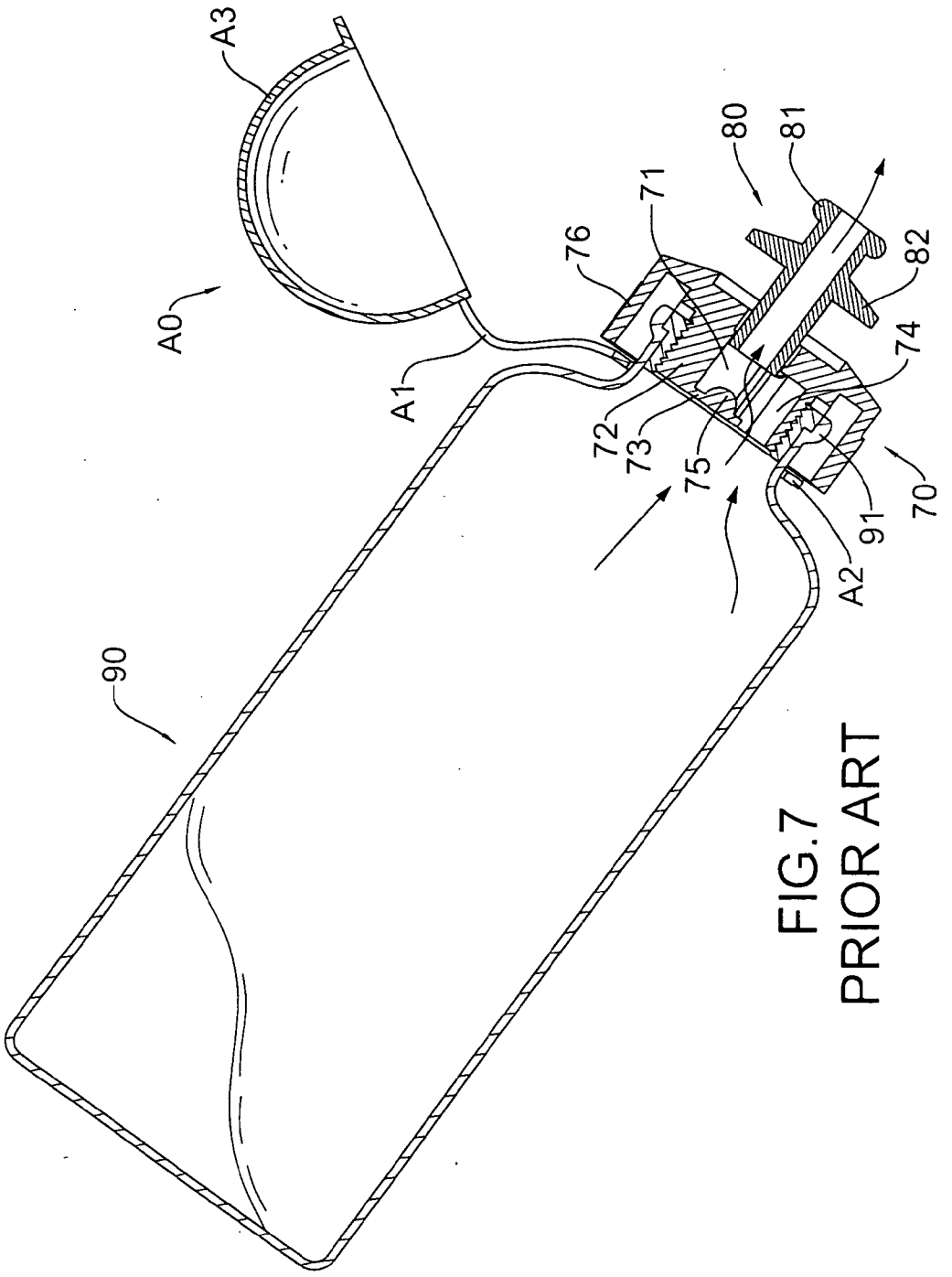

FIG.7
PRIOR ART

SPORTS WATER BOTTLE

BACKGROUND OF THE INVENTION

[0001] 1. Field of the Invention

[0002] The present invention relates to a sports water bottle, and more particularly to a sports water bottle that is sanitary to use.

[0003] 2. Description of the Related Art

[0004] With reference to FIGS. **6** and **7**, a conventional sports water bottle in accordance with the prior art has a container (**90**), a lid (**70**), a spout (**80**) and a cover (A**0**).

[0005] The container (**90**) has a top (not numbered) and a mouth (**91**). The mouth (**91**) is formed in the top of the container (**90**).

[0006] The lid (**70**) is mounted detachably on the mouth (**91**) and has a body (**72**) and a rim (**76**). The body (**72**) is mounted detachably in the mouth (**91**) and has an open top (not numbered), a bottom (not numbered), a center (not numbered), a spout space (**71**), a bottom panel (**73**) and a slot (**74**). The open top has a periphery (not numbered). The spout space (**71**) is defined in the center of the body (**72**) and communicates with the open top. The bottom panel (**73**) is formed in the bottom of the body (**72**) and has a center (not numbered) and a plug (**75**). The plug (**75**) is formed on the center of the bottom panel (**73**). The slot (**74**) is defined through the bottom panel (**73**) and communicates with the spout space (**71**) to allow water inside the container to flow through. The rim (**76**) extends downward from the periphery of the open top. The rim (**76**) can be rotated to detach the lid (**70**) from the mouth (**91**) of the container (**90**).

[0007] The spout (**80**) is mounted slidably in the spout space (**71**) and has a drinking tube (**81**) and a dish (**82**). The drinking tube (**81**) is inserted into the spout space (**71**) and has an outside surface (not numbered) and a bottom. The dish (**82**) is formed around the outside surface of the drinking tube (**81**) and selectively covers the open top of the body (**72**). When the spout (**80**) is pushed into the lid (**70**), the dish (**82**) covers the open top of the body (**72**) and the plug (**75**) is inserted into the bottom of the drinking tube (**81**) to prevent water inside the container (**90**) from flowing through.

[0008] The cover (A**0**) has a ring (A**2**), a neck (A**1**), and a cap (A**3**). The ring (A**2**) encircles the mouth (**91**). The neck (A**1**) extends from the ring (A**2**) and has a distal end (not numbered). The cap (A**3**) is formed at the distal end of the neck (A**1**). The cap (A**3**) is detachably fitted onto the lid (**70**) to prevent the spout (**80**) from being dirtied.

[0009] With reference to FIG. **7**, when people want to drink water inside the container (**90**), they will pull the spout (**80**) up with their teeth or their fingers to get the plug (**75**) to leave the bottom of the drinking tube (**81**) and allow the water to flow through the slot (**74**) and the drinking tube (**81**) to their mouths. However, biting or pulling up the spout (**80**) with teeth or fingers is not sanitary as teeth and fingers are usually full of dregs of food, dirt or bacteria, and the dregs, dirt or bacteria may remain on the spout after people bite or pull up the spout. So biting or pulling up the spout (**80**) with teeth or fingers is not a sanitary way to drink water inside the container (**90**).

SUMMARY OF THE INVENTION

[0010] The main objective of the invention is to provide an improved sports water bottle. The sports water bottle in accordance with the present invention comprises a container, a lid, a resilient member and a spout.

[0011] The container has a mouth.

[0012] The lid is mounted detachably onto the mouth and has a tube, a deck, an upper rim and a bottom panel. The tube is placed in the mouth and has an open top, a guide notch and an outside surface. The guide notch is defined on the open top of the tube. The deck encircles the outside surface of the tube under the guide notch and has a periphery. The upper rim extends upwards from the periphery of the deck, has an inside surface and defines a recess. The bottom panel is formed under the tube and multiple holes are defined through the bottom panel to allow water inside the container to flow through.

[0013] The resilient member has a button and two resilient arms. The button is mounted slidably in the recess and has two sides. The button can be pushed along the recess. The resilient arms cross the open top of the tube and each has a distal end and a proximal end. The distal ends of the resilient arms are attached to the two sides of the button; and the proximal ends of the resilient arms are mounted on the inside surface of the upper rim. When the button is pushed in, the resilient arms bend upward.

[0014] The spout is mounted onto the lid and has a drinking tube. The drinking tube is inserted slidably into the tube of the lid and has a dish, a guide tab and an outside surface. The dish is formed around the outside surface of the drinking tube and selectively covers the open top of the tube. When the dish is pushed up by the bending resilient arms, the drinking tube is pushed up to allow water to flow through the holes defined through the bottom panel. The guide tab is formed under the dish and is received in the guide notch to prevent the spout from rotating when the bending resilient arms push up the dish.

[0015] A user can push in the button with his/her fingers to bend the resilient arms to push up the drinking tube and spout and suck the drinking tube to drink water inside the container. Pushing up the spout by pushing in the button with fingers is much cleaner than biting or pulling up the spout with teeth or fingers.

[0016] Other objectives, advantages and novel features of the invention will become more apparent from the following detailed description when taken in conjunction with the accompanying drawings.

BRIEF DESCRIPTION OF THE DRAWINGS

[0017] FIG. **1** is an exploded perspective view of a sports water bottle in accordance with the present invention;

[0018] FIG. **2** is an enlarged cross-sectional side view of a lid and a spout of the sports water bottle in FIG. **1**;

[0019] FIG. **3** is an enlarged top view in partial section of the lid and spout along line **3-3** in FIG. **2**;

[0020] FIG. **4** is an enlarged operational side view in cross-section of the lid and spout in FIG. **2**;

[0021] FIG. **5** is an operational side view in cross-section of the sports water bottle in FIG. **1**;

[0022] FIG. **6** is a cross-sectional side view of a conventional sports water bottle in accordance with the prior art; and

[0023] FIG. **7** is an operational side view in cross-section of the conventional sports water bottle in FIG. **6**.

DETAILED DESCRIPTION OF PREFERRED EMBODIMENT

[0024] With reference to FIGS. **1-3**, a ventilated sports water bottle in accordance with the present invention comprises a container (**20**), a lid (**30**), a resilient member (**40**), a spout (**10**) and a cover (**60**).

[0025] The container (**20**) has a mouth (**21**) and optional inner threads (**22**). The mouth (**21**) has an inner surface. The inner threads (**22**) are formed on the inner surface of the mouth (**21**).

[0026] The lid (**30**) is attached onto the mouth (**21**) of the container (**20**) and has a tube (**33**), a deck (**32**), an optional lower rim (**31**), an upper rim (**34**) and a bottom panel (**333**).

[0027] The tube (**33**) is placed in the mouth (**21**) and has an open top, a guide notch (**336**), optional outer threads (**331**) and an outer surface. The guide notch (**336**) is defined on the open top of the tube (**33**). The outer threads (**331**) are formed on the outer surface of the tube (**33**). The outer threads (**331**) correspond to and connect with the inner threads (**22**).

[0028] The deck (**32**) encircles the outer surface of the tube (**33**) between the guide notch (**336**) and outer threads (**331**) and has a periphery.

[0029] The lower rim (**31**) extends downward from the periphery of the deck (**32**). The lower rim can be rotated to separate the outer threads (**331**) from the inner threads (**22**).

[0030] The upper rim (**34**) extends upward from the periphery of the deck (**32**) and has a recess (**321**), two guide tabs (**322**), two hooked tabs (**323**) and an inside surface. The recess (**321**) is defined in the upper rim (**34**). The guide tabs (**322**) are formed on the inside surface of the upper rim (**34**) and are opposite each other across the recess (**321**). The hooked tabs (**323**) are formed on the inside surface of the upper rim (**34**) and are opposite each other across the guide notch (**336**).

[0031] The bottom panel (**333**) is formed under the tube (**33**) and has a center, an optional plug (**334**) and multiple holes (**335**). The plug (**334**) is formed on the center of the bottom panel (**333**). The holes (**335**) are defined through the bottom panel (**333**) and around the plug (**334**). Water inside the container (**20**) can flow through the holes (**335**).

[0032] With further reference to FIG. **4**, the resilient member (**40**) has a button (**42**), two resilient arms (**41**), an anchoring strip (**46**), two sliding tabs (**44**) and two stopping tabs (**45**).

[0033] The button (**42**) is placed in the recess (**321**) slidably and has two sides. The button (**42**) can be pushed along the recess (**321**).

[0034] The two sliding tabs (**44**) are formed on two sides of the button (**42**), are opposite to each other and extend outward under respective guide tabs (**322**). The sliding tabs (**44**) under the guide tabs (**322**) prevent the button (**42**) from rising up off the deck (**32**).

[0035] The two resilient arms (**41**) cross the open top of the tube (**33**), and each have a distal end and a proximal end. The distal ends of the resilient arms (**41**) are attached to the button (**42**). When the button (**42**) is pushed in along the recess (**321**), the resilient arms (**41**) bend upward.

[0036] The anchoring strip (**46**) links the proximal ends of the resilient arms (**41**) and is mounted to the hooked tabs (**323**) to secure the proximal ends of the resilient arms (**41**).

[0037] The two stopping tabs (**45**) are formed on the resilient arms (**41**) respectively between the button (**42**) and the anchoring strip (**46**), and extend inward over the open top of the tube (**33**).

[0038] The spout (**10**) is mounted in the lid (**30**) and has a drinking tube (**11**) and an optional ventilation assembly (**50**).

[0039] With further reference to FIG. **4**, the drinking tube (**11**) is mounted slidably in the tube (**33**) of the lid (**30**) and has a dish (**12**), a guide tab (**14**), multiple optional steadying tabs (**16**), two stopping tabs (**15**), an outside surface, and a bottom.

[0040] The dish (**12**) is formed around the outer surface of the drinking tube (**11**) and selectively covers the open top of the tube (**33**). When the dish (**12**) is pushed up by the bending resilient arms (**41**), the drinking tube (**11**) is also pushed up.

[0041] The guide tab (**14**) is formed under the dish (**12**) and is received in the guide notch (**336**). The guide tab (**14**) guides the drinking tube (**11**) to move vertically and prevents the drinking tube (**11**) from rotating.

[0042] The multiple steadying tabs (**16**) are formed on the outer surface of the drinking tube (**11**), mounted in the tube (**33**) and abut the tube (**33**) snugly to allow the drinking tube (**11**) move vertically and stably.

[0043] The two stopping tabs (**15**) are formed on the outer surface of the drinking tube (**11**) and mounted below the stopping tabs (**45**) of the resilient member (**40**). When the resilient arms (**41**) bend upward, the stopping tabs (**45**) move over respective stopping tabs (**15**). The rising stopping tabs (**15**) are stopped by the stopping tabs (**45**) to prevent the drinking tube (**11**) from being pulled completely out from the tube (**33**).

[0044] The ventilation assembly (**50**) is mounted to the bottom of the drinking tube (**11**) and has an upper disc (**51**), a soft disc (**52**), and a lower disc (**53**).

[0045] The upper disc (**51**) is mounted on the bottom of the drinking tube (**11**) and has an upper hole (**511**), multiple upper vents (**512**), multiple upper channels (**514**), multiple upper hooks (**513**), a center, and a bottom. The upper hole (**511**) is defined in the center of the upper disc (**51**). The upper vents (**512**) and the upper channels (**514**) are defined through the upper disc (**51**) around the upper hole (**511**). The upper hooks (**513**) extend downward from the bottom of the upper disc (**51**).

[0046] The lower disc (**53**) has a lower hole (**531**), multiple lower vents (**532**), multiple lower channels (**534**),

multiple lower hooks (**533**), a center, and a top. The lower hole (**531**) is defined through the center of the lower disc (**53**). The lower vents (**532**) and the lower channels (**534**) are defined through the lower disc (**53**) around the lower hole (**531**) and correspond to the upper vents (**512**) and upper hooks (**513**), respectively. The lower hooks (**533**) extend upward from the top of the lower disc (**53**) and correspond to the upper channels (**514**).

[**0047**] The soft disc (**52**) has a middle hole (**521**), multiple middle vents (**522**), multiple middle channels (**524**), and a center. The middle hole (**521**) is defined through the center of the soft disc (**52**). The middle vents (**522**) are defined through the soft disc (**52**) around the middle hole (**521**), correspond to the upper vents (**512**) and lower vents (**532**), and each have an optional membrane (**525**). An aperture (**526**) is defined in each membrane (**525**). The middle channels (**524**) are defined through the soft disc (**52**) around the middle hole (**521**) and correspond to the upper hooks (**513**) and lower hooks (**533**). The lower hooks (**533**) and the upper hooks (**513**) are inserted through the middle channels (**524**) and mounted in the upper channels (**514**) and lower channels (**534**), respectively, to clamp the soft disc (**52**) between the upper disc (**51**) and the lower disc (**53**).

[**0048**] With further reference to FIGS. **2** and **5**, when the lower disc (**53**) is closed onto the bottom panel (**333**), the plug (**334**) is inserted into the lower hole (**531**) and the middle hole (**521**) to prevent water inside the container (**20**) from flowing through. When the container (**20**) is turned over, water inside the container (**20**) flows through the lower hole (**531**), middle hole (**521**) and upper hole (**511**). Air outside the container (**20**) runs through the lower vents (**532**), the apertures (**526**) defined in membranes (**525**) of the middle vents (**522**) and the upper vents (**512**) to balance the air pressure inside and outside the container (**20**).

[**0049**] The cover (**60**) has a ring (**62**), a neck (**61**), and a cap (**63**). The ring (**62**) encircles the mouth (**21**). The neck (**61**) extends from the ring (**62**) and has a distal end (not numbered). The cap (**63**) is formed at the distal end of the neck (**61**). The cap (**63**) is detachably mounted onto the lid (**30**) to prevent the spout (**10**) from being dirtied.

[**0050**] It is to be understood, however, that even though numerous characteristics and advantages of the present invention have been set forth in the foregoing description, together with details of the structure and function of the invention, the disclosure is illustrative only. Changes may be made in the details, especially in matters of shape, size, and arrangement of parts. It should be clear to those skilled in the art that further embodiment may be made without departing from the scope and spirit of the present invention.

What is claimed is:

1. A sports water bottle comprising:

a container having

a mouth having an inner surface;

a lid attached onto the mouth and having

a tube placed in the mouth and having

an open top;

a guide notch defined on the open top of the tube; and

an outer surface;

a deck encircling the outer surface of the tube under the guide notch and having a periphery;

an upper rim extending upward from the periphery of the deck and having

a recess defined in the upper rim;

an inner surface;

two guide tabs formed on the inner surface of the upper rim and being opposite to each other across the recess; and

two hooked tabs formed on the inner surface of the upper rim and being opposite to each other across the guide notch; and

a bottom panel formed under the tube and having

a center; and

multiple holes defined through the bottom panel;

a resilient member having

a button mounted slidably in the recess and having two sides;

two sliding tabs formed on the two sides of the button, being opposite to each other and extending outward slidably under respective guide tabs;

two resilient arms crossing the open top of the tube and each resilient arm having

a distal end attached to the button; and

a proximal end;

an anchoring strip linking the proximal ends of the resilient arms and mounted to the hooked tabs to secure the proximal ends of the resilient arms; and

two stopping tabs formed on the resilient arms respectively between the button and the anchoring strip and extending inward over the open top of the tube; and

a spout attached onto the lid and having

a drinking tube mounted slidably in the tube of the lid and having

an outer surface;

a bottom;

a dish formed around the outer surface of the drinking tube and selectively covering the open top of the tube;

a guide tab formed under the dish and received in the guide notch; and

two stopping tabs formed on the outer surface of the drinking tube and placed below the stopping tabs of the resilient member.

2. The sports water bottle as claimed in claim 1, wherein the spout further includes a ventilation assembly mounted to the bottom of the drinking tube.

3. The sports water bottle as claimed in claim 2, wherein the ventilation assembly has

an upper disc mounted to the bottom of the drinking tube and having

a center;

a bottom;

an upper hole defined through the center of the upper disc;

multiple upper vents defined through the upper disc around the upper hole;

multiple upper channels defined through the upper disc around the upper hole; and

multiple upper hooks extending downward from the bottom of the upper disc;

a lower disc having

a center

a top;

a lower hole defined through the center of the lower disc;

multiple lower vents defined through the lower disc around the lower hole and corresponding to the upper vents;

multiple lower channels defined through the lower disc around the lower hole and corresponding to the upper hooks; and

multiple lower hooks extending upward from the top of the lower disc and corresponding to the upper channels; and

a soft disc mounted between the upper disc and the lower disc and having

a center;

a middle hole defined through the center of the soft disc;

multiple middle vents defined through the soft disc around the middle hole and corresponding to the upper vents and lower vents; and

multiple middle channels defined through the soft disc around the middle hole and corresponding to the upper hooks and lower hooks, wherein the lower hooks and the upper hooks are inserted through the middle channels and mounted in the upper channels and lower channels, respectively, to secure the soft disc between the upper disc and the lower disc.

4. The sports water bottle as claimed in claim 3, wherein each of the middle vents further has a membrane and an aperture defined in the membrane.

5. The sports water bottle as claimed in claim 1, wherein the container further has an inner thread formed on the inner surface of the mouth and the tube further has an outer thread formed on the outer surface of the tube, corresponding to and connected with the inner thread.

6. The sports water bottle as claimed in claim 2, wherein the container further has an inner thread formed on the inner surface of the mouth and the tube further has an outer thread formed on the outer surface of the tube, corresponding to and connected with the inner thread.

7. The sports water bottle as claimed in claim 3, wherein the container further has an inner thread formed on the inner surface of the mouth and the tube further has an outer thread formed on the outer surface of the tube, corresponding to and connected with the inner thread.

8. The sports water bottle as claimed in claim 4, wherein the container further has an inner thread formed on the inner surface of the mouth and the tube further has an outer thread formed on the outer surface of the tube, corresponding to and connected with the inner thread.

9. The sports water bottle as claimed in claim 1, wherein the lid further has a lower rim extending downward from the periphery of the deck.

10. The sports water bottle as claimed in claim 2, wherein the lid further has a lower rim extending downward from the periphery of the deck.

11. The sports water bottle as claimed in claim 3, wherein the lid further has a lower rim extending downward from the periphery of the deck.

12. The sports water bottle as claimed in claim 4, wherein the lid further has a lower rim extending downward from the periphery of the deck.

13. The sports water bottle as claimed in claim 1, wherein the sports water bottle further comprises a cover having

a ring encircling the mouth of the container;

a neck extending from the ring and having a distal end; and

a cap formed at the distal end of the neck and mounted onto the lid detachably.

14. The sports water bottle as claimed in claim 2, wherein the sports water bottle further comprises a cover having

a ring encircling the mouth of the container;

a neck extending from the ring and having a distal end; and

a cap formed at the distal end of the neck and mounted onto the lid detachably.

15. The sports water bottle as claimed in claim 3, wherein the sports water bottle further comprises a cover having

a ring encircling the mouth of the container;

a neck extending from the ring and having a distal end; and

a cap formed at the distal end of the neck and mounted onto the lid detachably.

16. The sports water bottle as claimed in claim 4, wherein the sports water bottle further comprises a cover having

a ring encircling the mouth of the container;

a neck extending from the ring and having a distal end; and

a cap formed at the distal end of the neck and mounted onto the lid detachably.

17. The sports water bottle as claimed in claim 1, wherein the drinking tube further has multiple steadying tabs formed on the outer surface of the drinking tube, placed in the tube and abutting the tube.

18. The sports water bottle as claimed in claim 2, wherein the drinking tube further has multiple steadying tabs formed on the outer surface of the drinking tube, placed in the tube and abutting the tube.

19. The sports water bottle as claimed in claim 3, wherein the drinking tube further has multiple steadying tabs formed on the outer surface of the drinking tube, placed in the tube and abutting the tube.

20. The sports water bottle as claimed in claim 4, wherein the drinking tube further has multiple steadying tabs formed on the outer surface of the drinking tube, placed in the tube and abutting the tube.

* * * * *