(19) Europäisches Patentamt
European Patent Office
Office européen des brevets

(11) **EP 1 548 873 B1**

(12) **EUROPEAN PATENT SPECIFICATION**

(45) Date of publication and mention of the grant of the patent:
05.09.2007 Bulletin 2007/36

(51) Int Cl.:
H01Q 1/50 *(2006.01)* ***H01Q 1/42*** *(2006.01)*
H01Q 1/32 *(2006.01)*

(21) Application number: **03425759.2**

(22) Date of filing: **28.11.2003**

(54) **Antenna for a train with protective means against high voltages**

Antenne für die Eisenbahn mit Schutzmittel gegen Hochspannungen

Antenne pour un train muni de moyens de protection contre haute tension

(84) Designated Contracting States:
AT BE BG CH CY CZ DE DK EE ES FI FR GB GR HU IE IT LI LU MC NL PT RO SE SI SK TR

(43) Date of publication of application:
29.06.2005 Bulletin 2005/26

(73) Proprietor: **"LEANTENNE S.R.L." denominazione abbreviata**
"LEA S.R.L."
37067 Valeggio sul Mincio (Verona) (IT)

(72) Inventor: **Bertellini, Maurizio**
46049 Volta Mantovana (Prov. Mantova) (IT)

(74) Representative: **Modiano, Micaela Nadia et al**
Dr. Modiano & Associati SpA
Via Meravigli 16
20123 Milano (IT)

(56) References cited:
DE-A- 2 550 915
DE-U- 20 106 188
GB-A- 255 987
US-A- 3 968 411
US-A- 4 395 713
US-A- 5 122 921

- **"RESETTABLE FUSES" AUTOMOTIVE ENGINEERING, SOCIETY OF AUTOMOTIVE ENGINEERS. WARRENDALE, US, vol. 104, no. 9, 1 September 1996 (1996-09-01), pages 137-139, XP000627074 ISSN: 0098-2571**

Note: Within nine months from the publication of the mention of the grant of the European patent, any person may give notice to the European Patent Office of opposition to the European patent granted. Notice of opposition shall be filed in a written reasoned statement. It shall not be deemed to have been filed until the opposition fee has been paid. (Art. 99(1) European Patent Convention).

EP 1 548 873 B1

Printed by Jouve, 75001 PARIS (FR)

Description

[0001] The present invention relates to an antenna for trains.

[0002] Currently, antennas are generally provided with devices that allow to protect them from so-called static charges that can accumulate on the radiating rods.

[0003] Such devices are generally constituted by an inductor, which is sized according to procedures known per se and is interposed between the radiating rod and the ground so as to discharge the static charges towards the ground.

[0004] Therefore, the presence of the inductor allows to eliminate the danger that may arise from the conduction of the charges towards devices connected to the antenna, i.e. downstream of the feeder cable, and on which several personnel performing various tasks work.

[0005] Since static charges are rather weak, the inductor does not have to withstand strong currents, because as the charges reach the antenna they are immediately dissipated to the ground before they can accumulate thus become potentially dangerous to personnel.

[0006] For this reason, the inductors currently used to eliminate static charges are generally constituted by a wire that has a rather small cross-section, and they are sized so as to generally withstand the flow of a current comprised between 2 and 100 amperes according to the type and size of antenna being considered.

[0007] However, antennas used on trains may be subjected not only to static charges but also to dynamic voltages or currents, such as those carried by high-voltage cables suspended from electric power line pylons or by electric lines that supply power to the trains.

[0008] Moreover, it should be noted that this risk is increased by the fact that the antennas used on trains are generally located in the uppermost regions and possibly at regions that are clear of obstacles.

[0009] From the above description it is evident that currently an antenna for trains is particularly exposed to the danger of electrical shock, which is extremely dangerous not so much for the possible destruction of the antenna but rather because of the consequences that such shocks can cause to the personnel using the services of the antenna on board the trains.

[0010] If an antenna accidentally makes contact, for example, with a high-voltage line, the current carried by the line, in contact with the antenna, in fact immediately fuses the grounding inductor and therefore discharges along the antenna feeder.

[0011] It is evident that this phenomenon entails as a consequence, the carrying of high-voltage to the vicinity of operators, with great danger for their safety.

[0012] In order to solve the drawback noted above, antennas have been devised in which an attempt has been made to increase so-called robustness.

[0013] However, in the application described above these solutions are difficult to use, essentially because of the fact that in order to ensure indestructibility of the inductor, since high-voltage lines can carry currents with tens of thousands of amperes, it would be necessary to size such inductor with wire diameters of approximately ten centimeters.

[0014] It is immediately evident that such an approach is difficult to provide, first of all because of the highly problematic dimensions of the inductor and secondly because of the fact that by working frequently with antennas operating at a frequency around 900 MHz (for example in the GSM band), the dimensions of the inductor would no longer allow resonance of the antenna, since they would be physically larger than the wavelengths related to these frequencies.

[0015] Accordingly, antennas are commercially available which are also used as train antennas and are provided with safety devices constituted by "compromise" inductors, which however cannot ensure safety to the operator.

[0016] DE 25 50 915, GB 255 987 and US-A-5 122 921 all disclose an antenna with a protective circuit.

[0017] DE 201 06 188 and US-4 395 713 disclose an enclosure for the radiating element of the antenna.

[0018] "Resettable fuses" Automotive Engineering, society of Automotive Engineers, Warrendale, US, vol. 104, No. 9, 1 September 1996 (1996-09-01), pages 137-139, XP000627074 ISSN: 0098-2571 discloses the self-resetting action of polymer-based PTC devices, such as resettable fuses, that can be advantageous in vehicles.

[0019] US-3 968 411 discloses a transmitter-receiver protection device.

[0020] An object of the present invention is to provide a train antenna that ensures operator safety even if it is subjected to intense electrical shocks, by ensuring optimum receiving capability of the radiating element.

[0021] Another object of the present invention is to provide a train antenna that has a very simple structure at competitive production cost.

[0022] These objects that will become better apparent hereinafter are achieved by a train antenna as defined in claim 1.

[0023] Advantageously, an antenna according to the invention is characterized in that the spark-gap unit comprises a spark gap provided with two electrodes facing each other.

[0024] Conveniently, an antenna according to the present invention is characterized in that it comprises means for adjusting the distance between said pair of facing electrodes according to the critical trigger voltage.

[0025] Further characteristics and advantages of the invention will become better apparent from the description of preferred but not exclusive embodiments of an antenna according to the invention, illustrated by way of non-limiting example in the accompanying drawings, wherein:

Figure 1 is an electrical diagram of a train antenna according to the present invention;

Figure 2 is a partially sectional side elevation view of an example of embodiment of a train antenna according to the invention;and

Figure 3 is a rear elevation view of the train antenna according to the invention shown in Figure 2.

[0026] In the examples of embodiment that follow, individual characteristics, given in relation to specific examples, may actually be interchanged with other different characteristics that exist in other examples of embodiment.

[0027] With reference to the figures, an antenna according to the invention, generally designated by the reference numeral 1, comprises a radiating element 2, constituted for example by a rod, which is connected to a feeder cable 3 that is meant to connect the antenna 1 to devices that use said antenna 1.

[0028] The radiating element 2 is connected to a grounding inductor 4.

[0029] Furthermore, the antenna 1 is provided with an unbreakable protective enclosure 10 for the radiating element 2.

[0030] Moreover, according to the present invention, an antenna 1 has a fuse element 6 that is interposed between the radiating element 2 and the feeder cable 3.

[0031] In practice, according to a preferred embodiment, the fuse element 6 has a first connecting end 6a that is connected to a first end portion 2a of the radiating element 2 and a second connecting end 6b that is connected to the feeder cable 3.

[0032] Conveniently, as clearly shown in the electrical diagram illustrated in Figure 1, connection to the inductor 4 is provided at a connecting region that is located substantially proximate to the second connecting end.

[0033] According to a further important aspect of the invention, the first end portion 2a of the radiating element 2 is connected to at least one grounding spark-gap unit 7.

[0034] According to a preferred embodiment, the spark-gap unit 7 can be constituted by a spark gap that is provided with two electrodes 8a and 8b facing each other.

[0035] Conveniently, the antenna 1 is provided with means 9 for adjusting the distance between the pair of facing electrodes 8a and 8b.

[0036] For example, as shown in Figures 2 and 3, one of the two electrodes, for example electrode 8a, can be supported by a threaded element that is coupled to a bracket 11: screwing or unscrewing the threaded element moves electrode 8a closer to electrode 8b.

[0037] Advantageously, according to a preferred embodiment the fuse element 6 can be constituted by a microfuse supported by a printed circuit.

[0038] In particular, it has been found that the antennas 1 described above may operate in single-band mode at a frequency comprised between 440 and 470 MHz or at a frequency comprised between 870 and 960 MHz. However, an antenna 1 may also be of the multiband type and more precisely may operate in dual-band or tri-band mode.

[0039] Operation of an antenna according to the present invention is as follows.

[0040] Practically simultaneously with the flow of current, the fuse element 6 fuses and vaporizes.

[0041] If the antenna 1, or rather its radiating element 2 (or the unbreakable protective enclosure 10) collides with a high-voltage line, the current flows through the antenna 1 following the path constituted by the radiating element 2, the fuse element 6, and the inductor 4.

[0042] Due to vaporization of the fuse element 6, an electric arc is established which in any case limits the current that will flow through the inductor 4.

[0043] The current that flows through the inductor is further reduced by the action of the spark gap.

[0044] The distance between the electrodes 8a and 8b is in fact advantageously shorter than the length of the electric arc generated at the vaporized fuse element 6, and this entails the triggering of an additional electric arc between the tips of the electrodes 8a and 8b.

This subsequent triggering divides the current into two arcs, with a consequent further limitation of the current that flows through the inductor 4, preventing its fusing.

[0045] All the characteristics of the invention that are described above as being advantageous, convenient or the like, may also be omitted or replaced by equivalents.

[0046] Thus, for example, the fuse element 6 can be replaced by a low-voltage capacitor, which when subjected to a high voltage is destroyed, simulating the fusing of the fuse element 6.

[0047] The invention thus conceived is susceptible of numerous modifications and variations, all of which are within the scope of the appended claims.

[0048] In practice it has been found that in all the embodiments the invention has achieved the intended aim and objects.

[0049] In particular, it has been found experimentally that an antenna according to the invention can withstand the flow of intense currents for times on the order of one tenth of a second without voltages that are dangerous for users appearing on the feeder cable.

[0050] This result appears to be highly satisfactory also in relation to the fact that the safety devices (such as disconnectors) that operate on high-voltage lines have reaction times on the order of hundredths of a second.

Claims

1. A train antenna (1) comprising a radiating element (2) that is connected to a feeder cable (3), a fuse element (6), a grounding inductor (4) and at least one spark-gap unit (7), wherein said fuse element (6) is provided with a first end (6a) for connection to a first end portion (2a) of said radiating element and a second end (6b) for connection to said grounding inductor (4) and to said feeder cable (3), said fuse element (6) being adapted to disconnect said first

connection end (6a) from said second connection end (6b) upon flow of a current whose intensity exceeds a limit current, said first end portion (2a) of said radiating element (2) being connected to said at least one spark-gap unit (7) connected to the ground, and said feeder cable (3) being connected downstream of said fuse element (6).

2. The antenna according to claim 1, **characterized in that** it further comprises an unbreakable protective enclosure (10) for said radiating element (2).

3. The antenna according to claim 1, **characterized in that** said at least one spark-gap unit (7) comprises a spark gap provided with two facing electrodes (8a, 8b).

4. The antenna according to one or more of the preceding claims, **characterized in that** it comprises means (9) for adjusting the distance between said pair of facing electrodes (8a, 8b) according to the critical trigger voltage.

5. The antenna according to one or more of the preceding claims, **characterized in that** said radiating element (2) comprises a radiating rod.

6. The antenna according to one or more of the preceding claims, **characterized in that** said fuse element (6) comprises a microfuse that is supported by a printed circuit.

7. The antenna according to claim 3, **characterized in that** the distance between said facing electrodes (8a, 8b) is shorter than the length of said fuse element (6).

Patentansprüche

1. Eisenbahnantenne (1), umfassend ein an ein Speisekabel (3) angeschlossenes Abstrahlelement (2), einen Schmelzeinsatz (6), einen Erdinduktor (4) und wenigstens eine Funkenstreckeneinheit (7), wobei der Schmelzeinsatz (6) mit einem ersten Ende (6a) zum Anschluß an einen ersten Endabschnitt (2a) des Abstrahlelements und mit einem zweiten Ende (6b) zum Anschluß an den Erdinduktor (4) und an das Speisekabel (3) versehen ist, wobei der Schmelzeinsatz (6) dazu angepaßt ist, das erste Anschlussende (6a) von dem zweiten Anschlussende (6b) zu trennen, wenn ein Strom fließt, dessen Stärke einen Stromgrenzwert überschreitet, wobei der erste Endabschnitt (2a) des Abstrahlelements (2) mit der wenigstens einen an Masse angeschlossenen Funkenstreckeneinheit (7) verbunden ist und das Speisekabel (3) nach dem Schmelzeinsatz (6) geschaltet ist.

2. Antenne nach Anspruch 1, **dadurch gekennzeichnet, daß** sie ferner ein bruchfestes Schutzgehäuse (10) für das Abstrahlelement (2) umfaßt.

3. Antenne nach Anspruch 1, **dadurch gekennzeichnet, daß** die wenigstens eine Funkenstreckeneinheit (7) eine mit zwei sich gegenüberliegenden Elektroden (8a, 8b) versehene Funkenstrecke umfaßt.

4. Antenne nach einem oder mehreren der vorhergehenden Ansprüche, **dadurch gekennzeichnet, daß** sie Mittel (9) für die Einstellung der Entfernung zwischen dem Paar gegenüberliegender Elektroden (8a, 8b) entsprechend der kritischen Zündspannung umfaßt.

5. Antenne nach einem oder mehreren der vorhergehenden Ansprüche, **dadurch gekennzeichnet, daß** das Abstrahlelement (2) eine Abstrahlstange umfaßt.

6. Antenne nach einem oder mehreren der vorhergehenden Ansprüche, **dadurch gekennzeichnet, daß** der Schmelzeinsatz (6) eine Feinsicherung umfaßt, welche durch einen gedruckten Schaltkreis unterstützt wird.

7. Antenne nach Anspruch 3, **dadurch gekennzeichnet, daß** der Abstand zwischen den gegenüberliegenden Elektroden (8a, 8b) kürzer als die Länge des Schmelzeinsatzes (6) ist.

Revendications

1. Antenne (1) pour trains, comprenant un élément rayonnant (2) qui est connecté à un câble d'alimentation (3), un élément fusible (6), une bobine d'inductance (4) de mise à la terre et au moins un dispositif éclateur (7), ledit élément fusible (6) comportant une première extrémité (6a) destinée à être connectée à une première partie d'extrémité (2a) dudit élément rayonnant et une seconde extrémité (6b) destinée à être connectée à ladite bobine d'inductance (4) de mise à la terre et audit câble d'alimentation (3), ledit élément fusible (6) étant apte à déconnecter ladite première extrémité de connexion (6a) par rapport à ladite seconde extrémité de connexion (6b) lors du passage d'un courant dont l'intensité dépasse une valeur limite d'intensité, ladite première partie d'extrémité (2a) dudit élément rayonnant (2) étant connectée audit au moins un dispositif éclateur (7) mis à la terre, et ledit câble d'alimentation (3) étant connecté en aval dudit élément fusible (6).

2. Antenne selon la revendication 1, **caractérisée en ce qu'**elle comprend en outre une enceinte protectrice incassable (10) pour ledit élément rayonnant

(2).

3. Antenne selon la revendication 1, **caractérisée en ce que** ledit au moins un dispositif éclateur (7) comprend un éclateur pourvu de deux électrodes (8a, 8b) en regard l'une de l'autre.

4. Antenne selon une ou plusieurs des revendications précédentes, **caractérisée en ce qu'**elle comprend un moyen (9) pour régler la distance entre lesdites deux électrodes (8a, 8b) en regard l'une de l'autre, en fonction de la tension critique de déclenchement.

5. Antenne selon une ou plusieurs des revendications précédentes, **caractérisée en ce que** ledit élément rayonnant (2) comporte une tige rayonnante.

6. Antenne selon une ou plusieurs des revendications précédentes, **caractérisée en ce que** ledit élément fusible (6) est constitué par un microfusible supporté par un circuit imprimé.

7. Antenne selon la revendication 3, **caractérisée en ce que** la distance entre lesdites électrodes (8a, 8b) en regard l'une de l'autre est plus courte que la longueur dudit élément fusible (6).

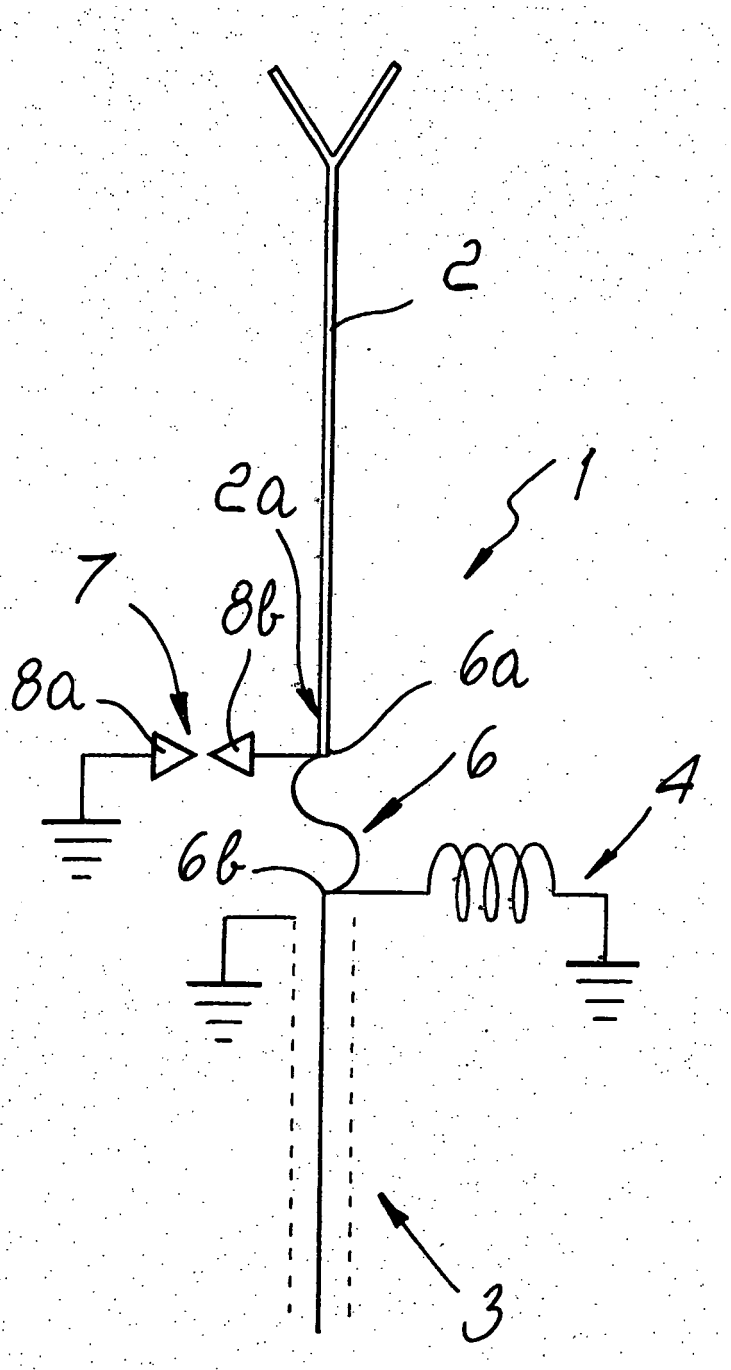

Fig. 1

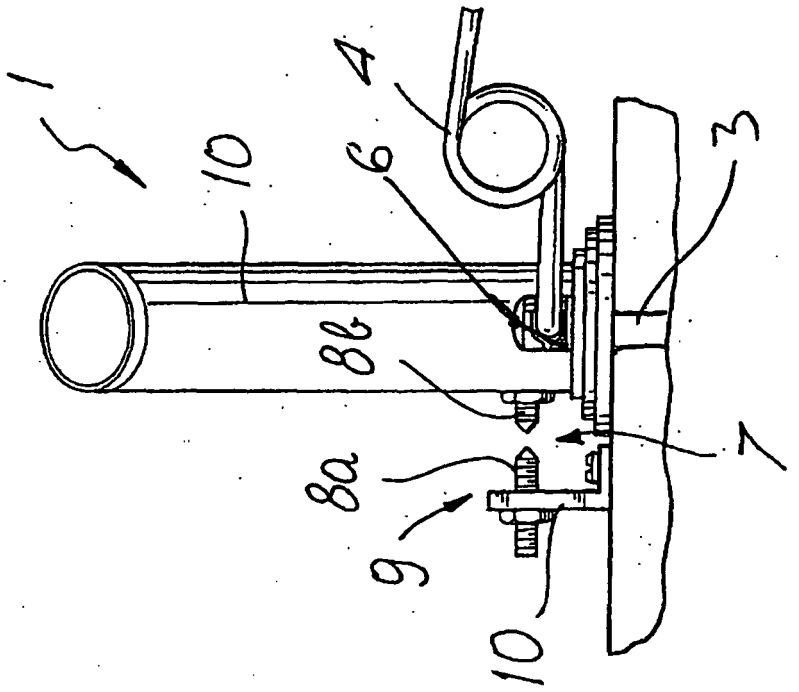

Fig. 3

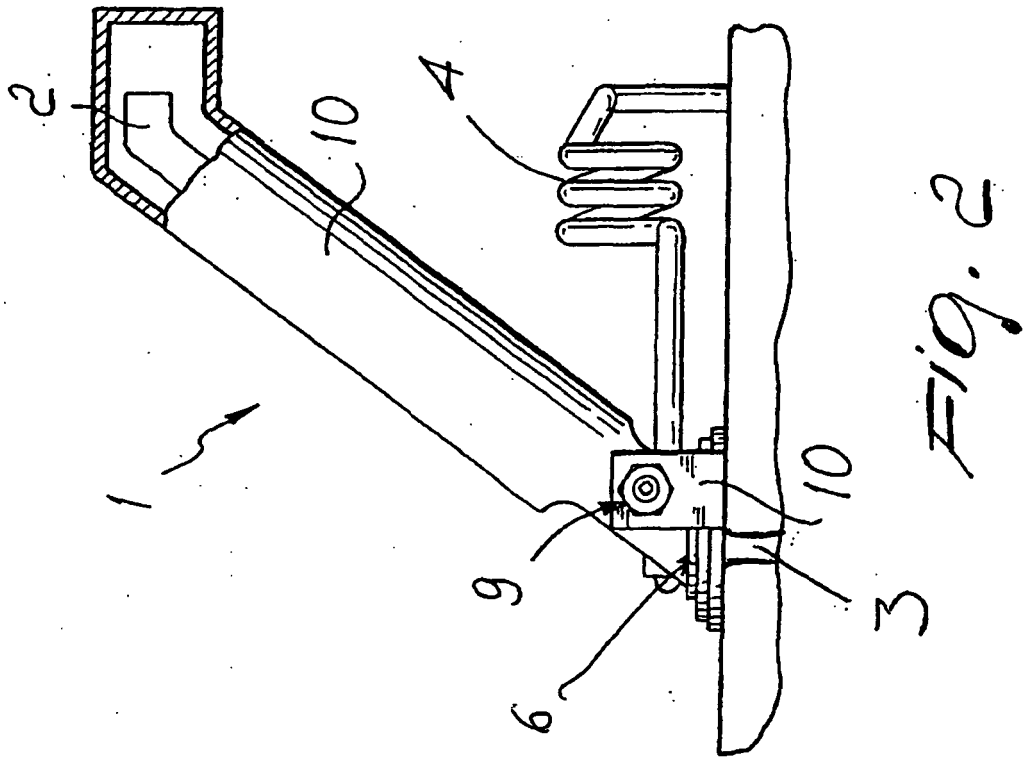

Fig. 2

REFERENCES CITED IN THE DESCRIPTION

This list of references cited by the applicant is for the reader's convenience only. It does not form part of the European patent document. Even though great care has been taken in compiling the references, errors or omissions cannot be excluded and the EPO disclaims all liability in this regard.

Patent documents cited in the description

- DE 2550915 **[0016]**
- GB 255987 A **[0016]**
- US 5122921 A **[0016]**
- DE 20106188 **[0017]**
- US 4395713 A **[0017]**
- US 3968411 A **[0019]**

Non-patent literature cited in the description

- Resettable fuses. *Automotive Engineering, society of Automotive Engineers,* 01 September 1996, vol. 104 (9), 137-139 **[0018]**