June 27, 1967 H. ST. LAWRENCE DANNATT 3,327,828

KEYBOARD MECHANISM HAVING LATCH MEANS

Filed Jan. 25, 1966

10 Sheets-Sheet 1

Fig. 1.

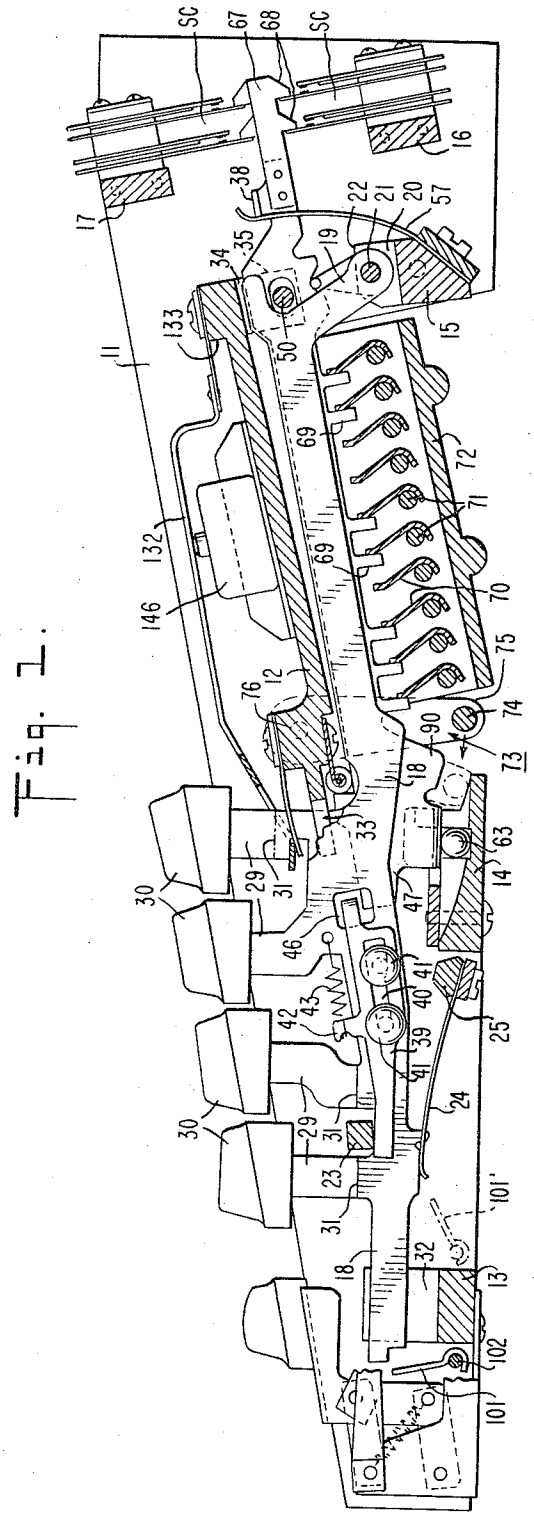

Fig. 2.

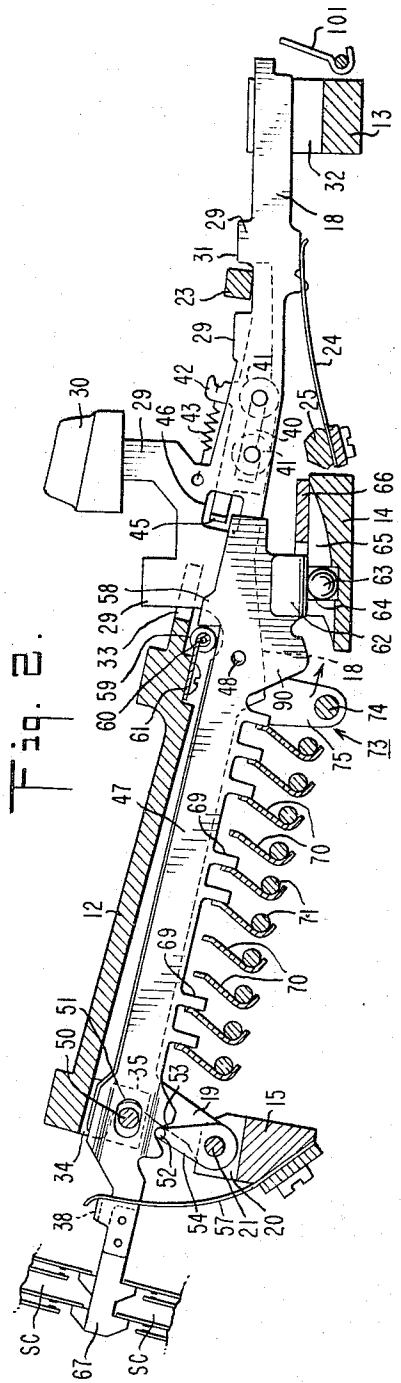

INVENTOR.
HUGH ST. LAWRENCE DANNATT
BY
John A. Harvey
ATTORNEY

June 27, 1967 H. ST. LAWRENCE DANNATT 3,327,828

KEYBOARD MECHANISM HAVING LATCH MEANS

Filed Jan. 25, 1966 10 Sheets-Sheet 2

Fig. 2.

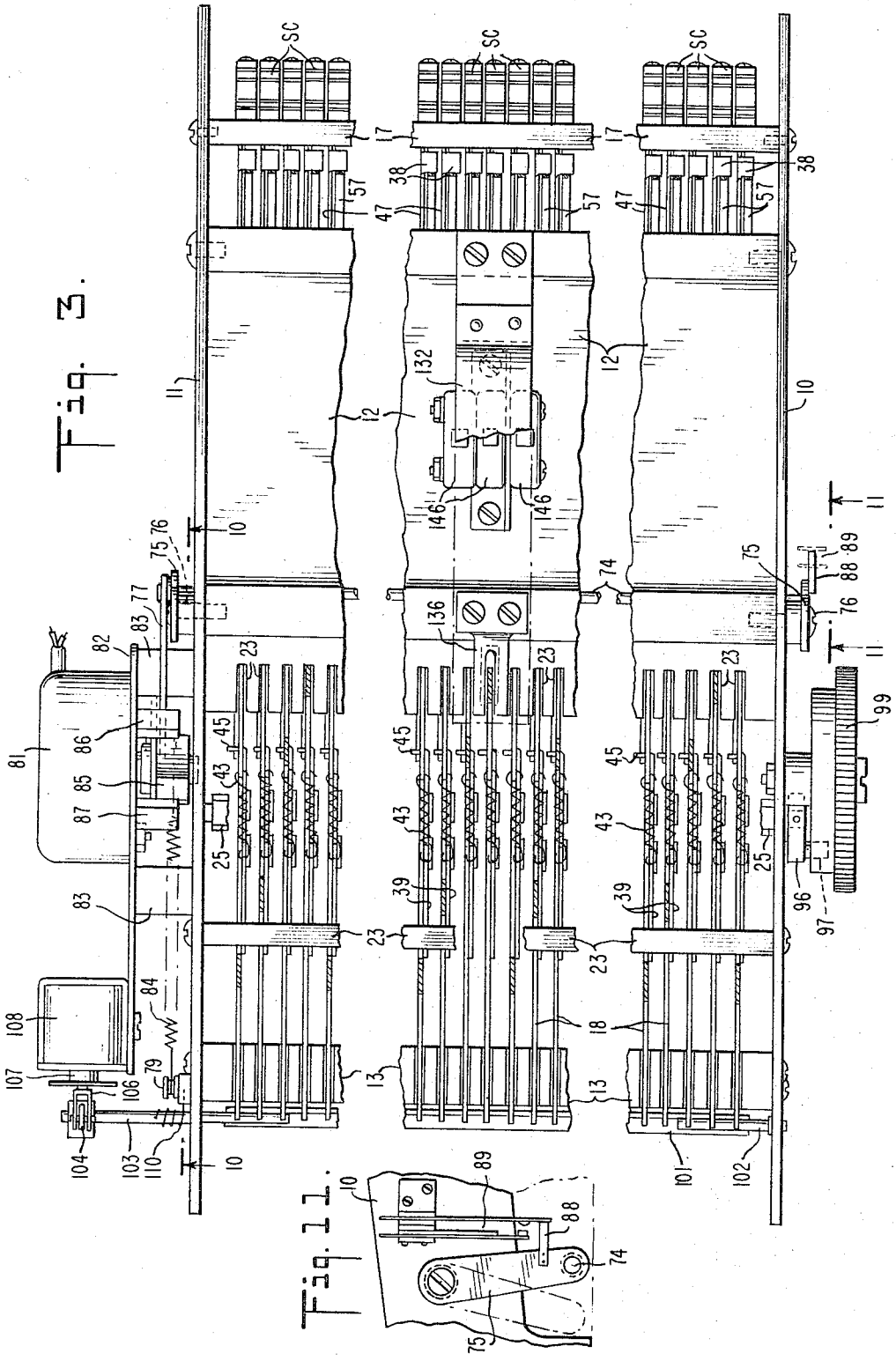

Fig. 11.

June 27, 1967 H. ST. LAWRENCE DANNATT 3,327,828

KEYBOARD MECHANISM HAVING LATCH MEANS

Filed Jan. 25, 1966 10 Sheets-Sheet 3

Fig. 15.

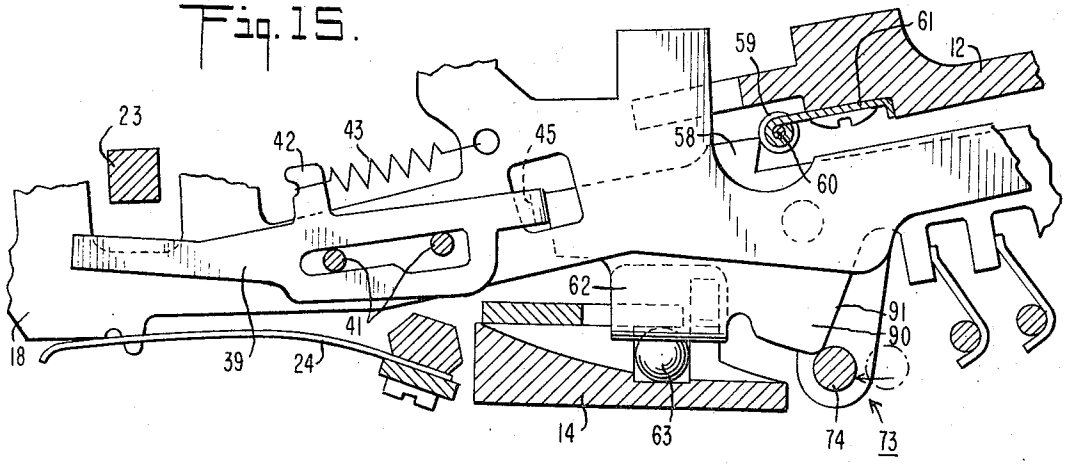

Fig. 16.

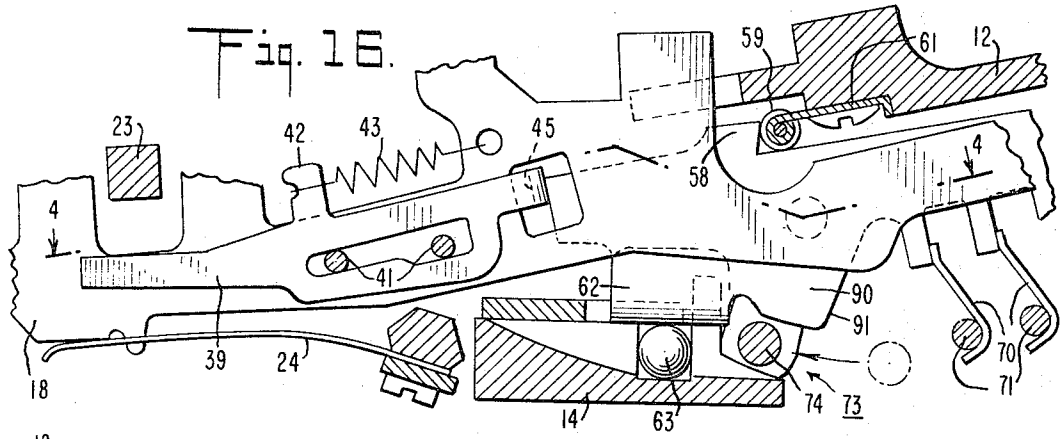

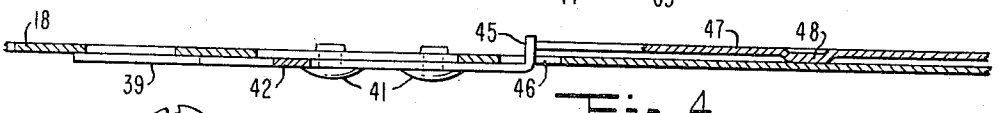

Fig. 4.

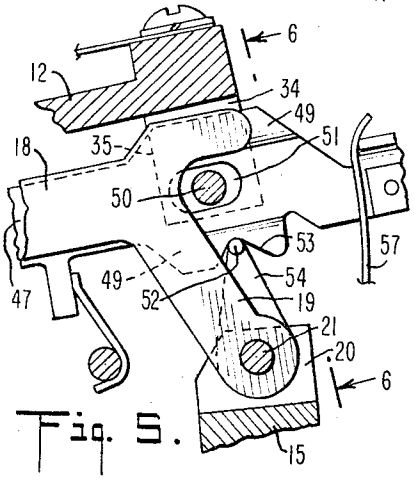

Fig. 5.

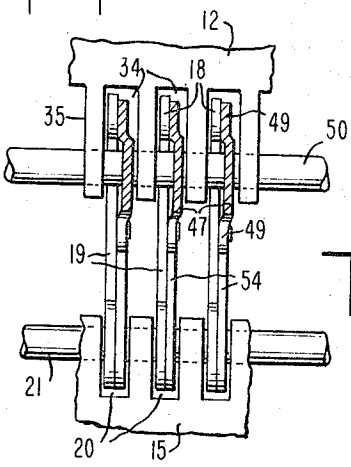

Fig. 6.

June 27, 1967 H. ST. LAWRENCE DANNATT 3,327,828

KEYBOARD MECHANISM HAVING LATCH MEANS

Filed Jan. 25, 1966 10 Sheets-Sheet 4

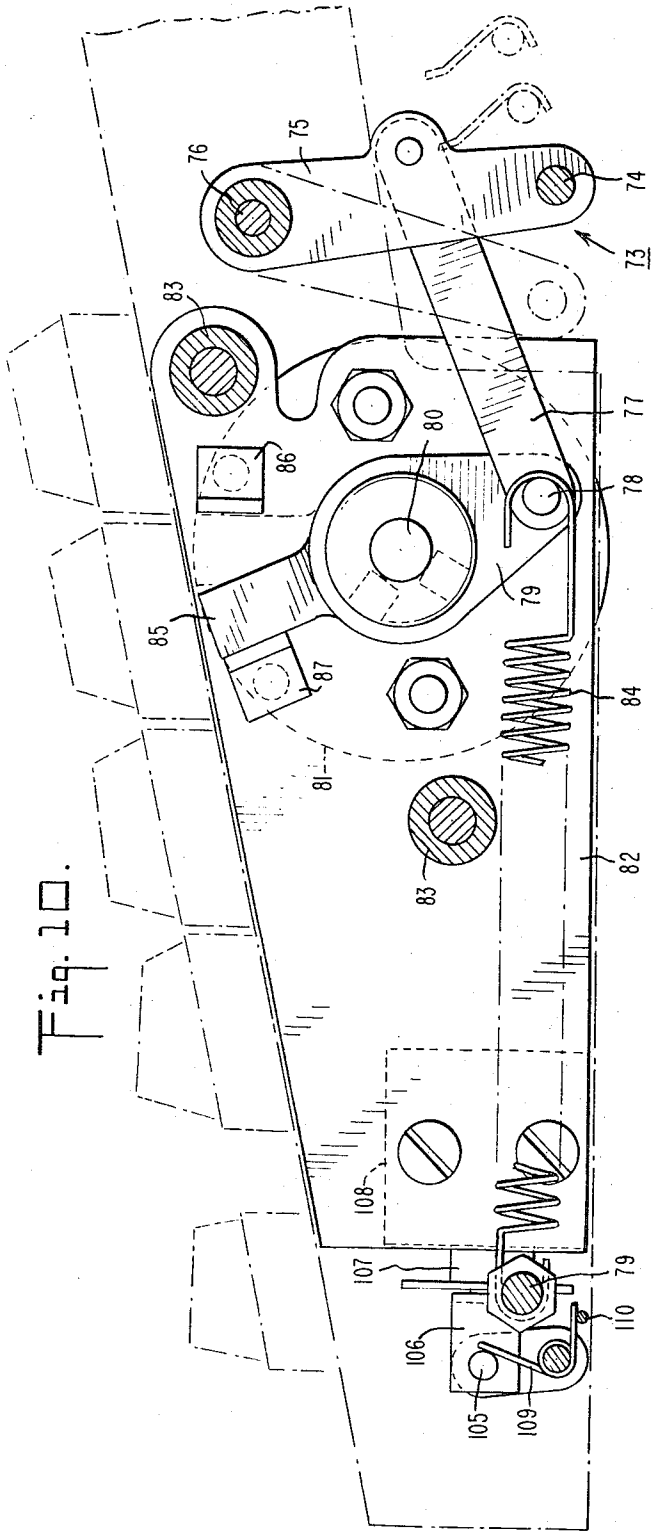

Fig. 10.

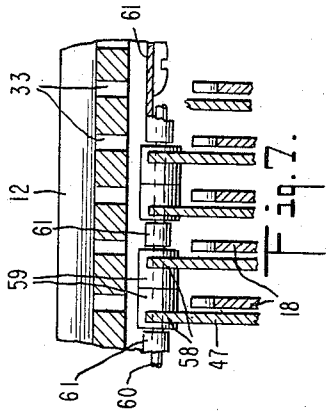

Fig. 7.

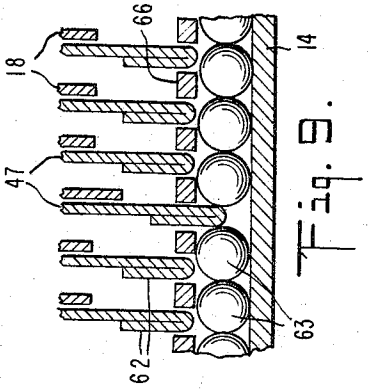

Fig. 9.

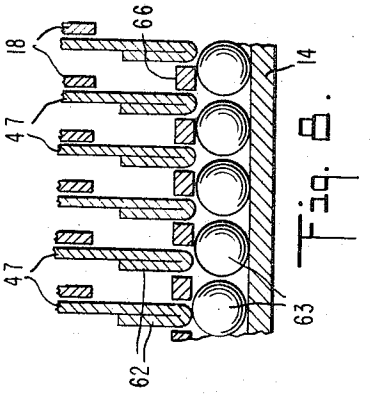

Fig. 8.

June 27, 1967 H. ST. LAWRENCE DANNATT 3,327,828

KEYBOARD MECHANISM HAVING LATCH MEANS

Filed Jan. 25, 1966 10 Sheets-Sheet 5

Fig. 12.

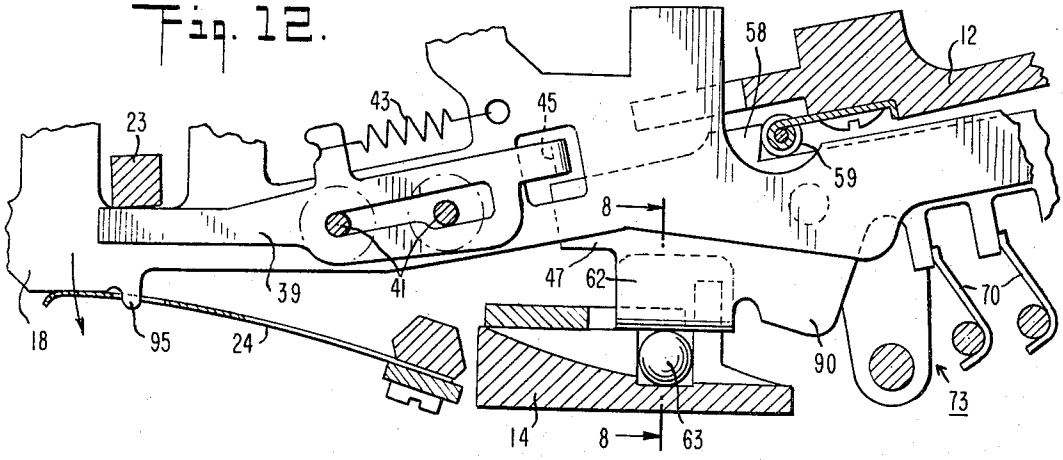

Fig. 13.

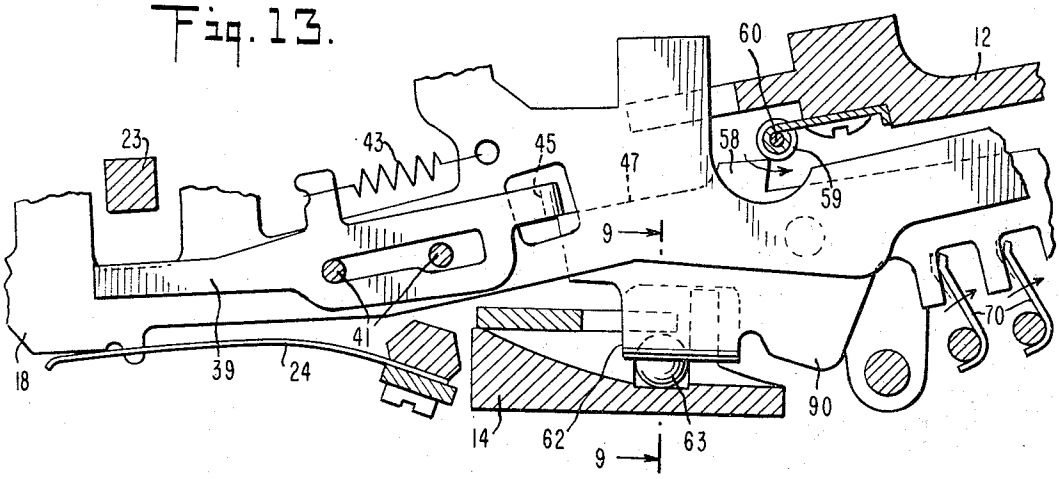

Fig. 14.

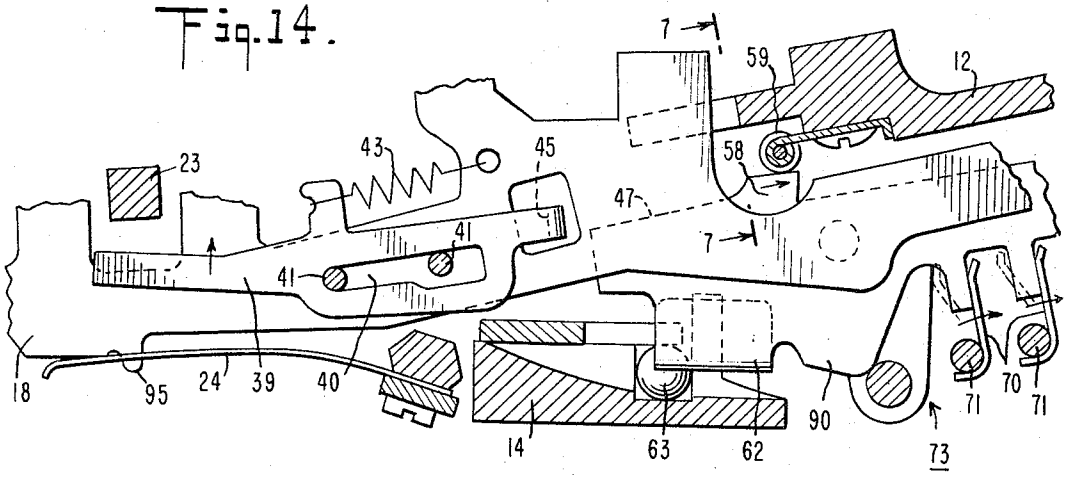

June 27, 1967 H. ST. LAWRENCE DANNATT 3,327,828

KEYBOARD MECHANISM HAVING LATCH MEANS

Filed Jan. 25, 1966 10 Sheets-Sheet 6

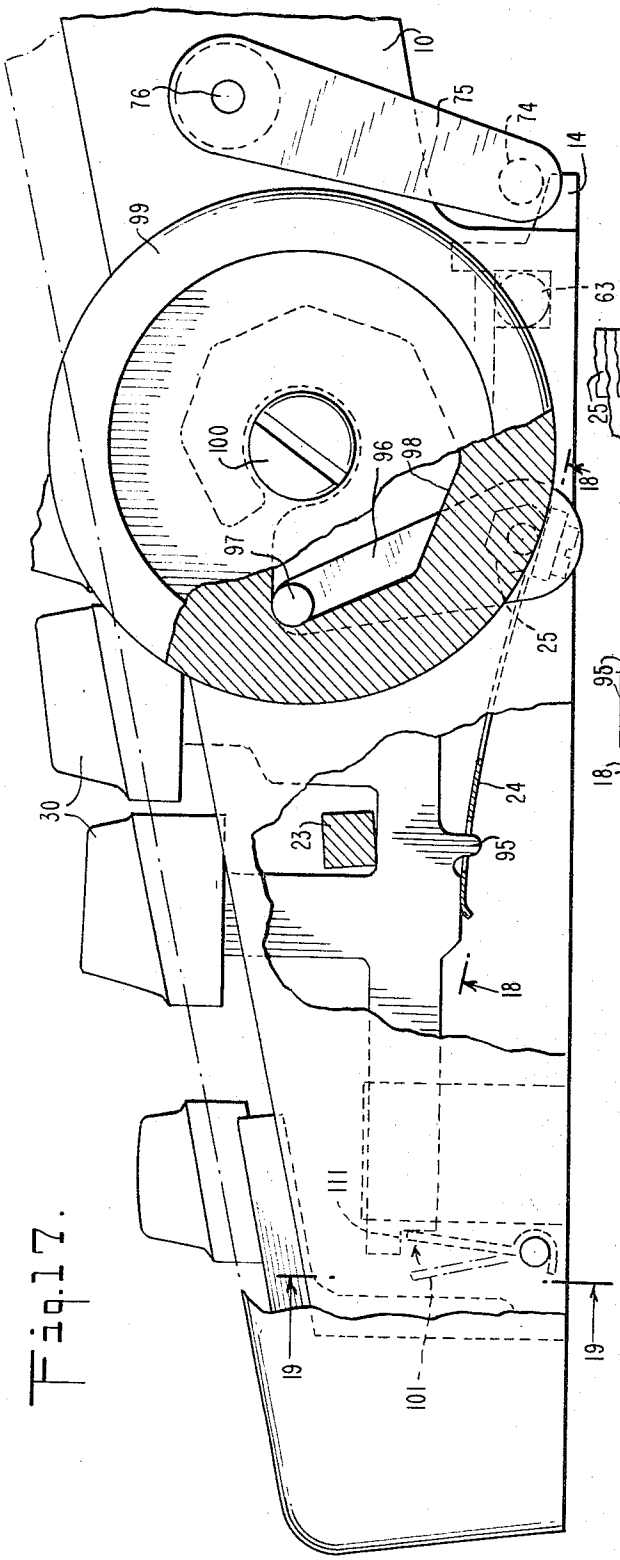

Fig. 17.

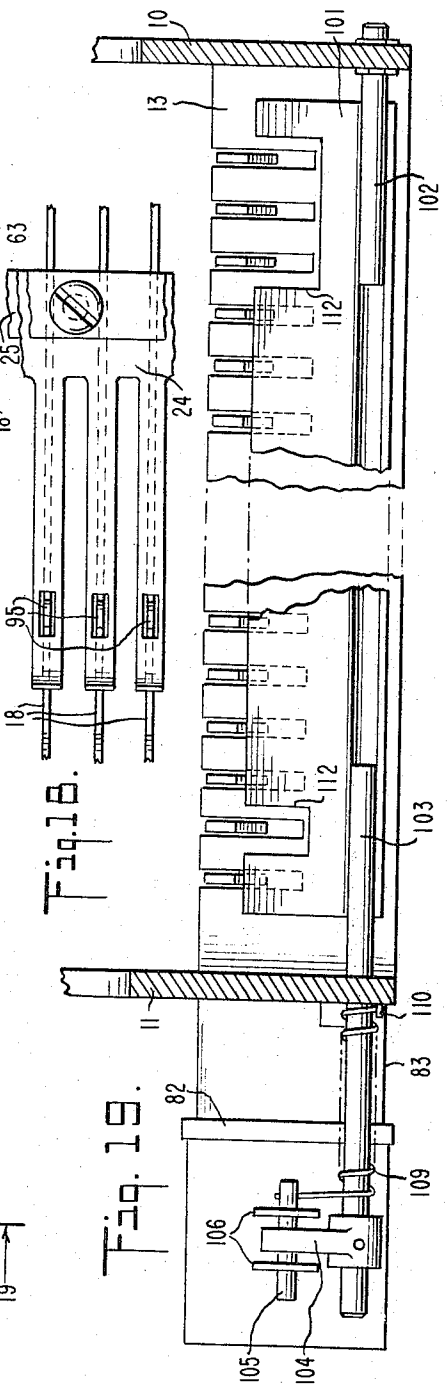

Fig. 18.

Fig. 19.

June 27, 1967 H. ST. LAWRENCE DANNATT 3,327,828

KEYBOARD MECHANISM HAVING LATCH MEANS

Filed Jan. 25, 1966 10 Sheets-Sheet 7

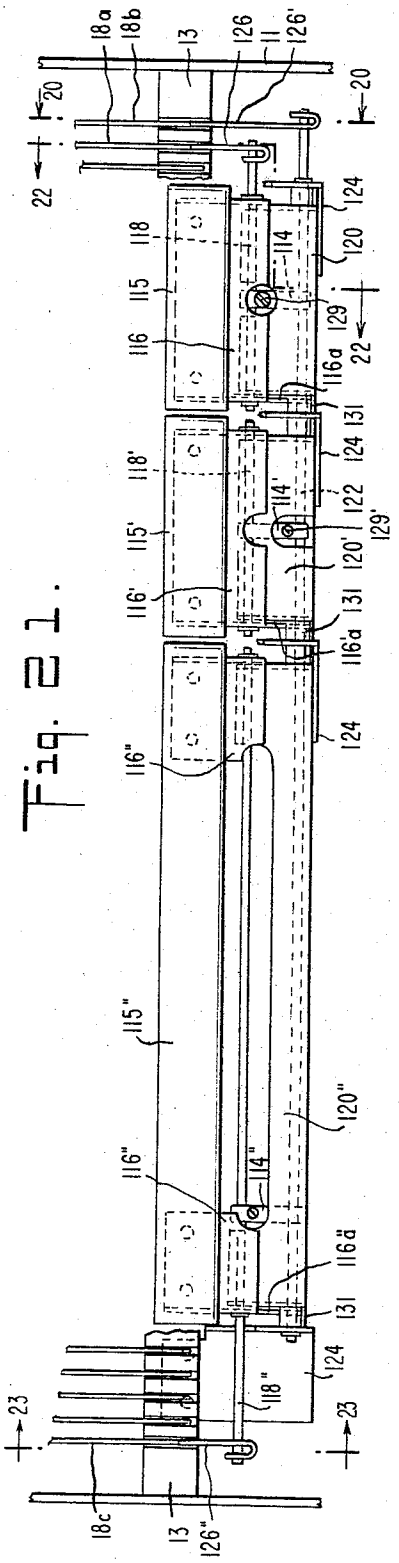

Fig. 21.

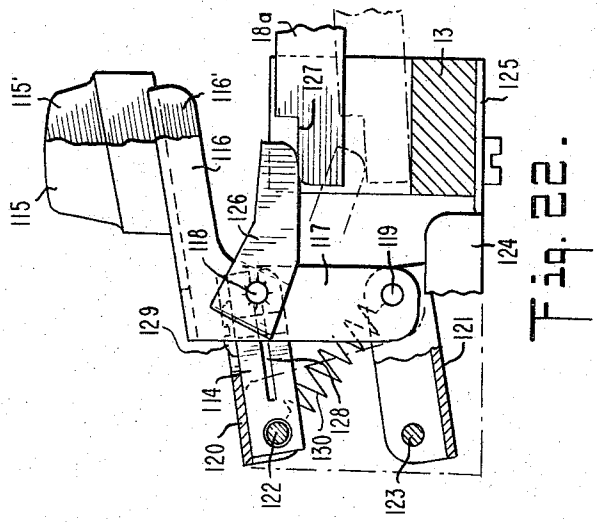

Fig. 22.

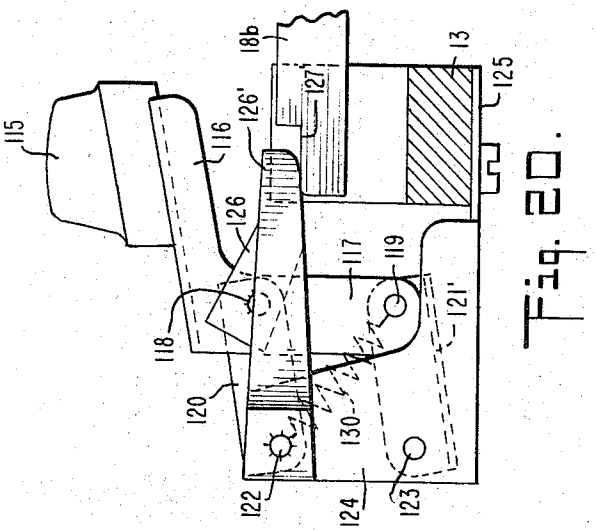

Fig. 20.

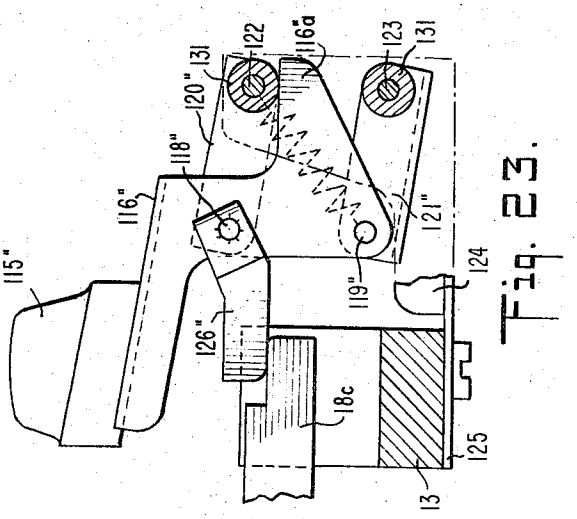

Fig. 23.

June 27, 1967 H. ST. LAWRENCE DANNATT 3,327,828

KEYBOARD MECHANISM HAVING LATCH MEANS

Filed Jan. 25, 1966 10 Sheets-Sheet 8

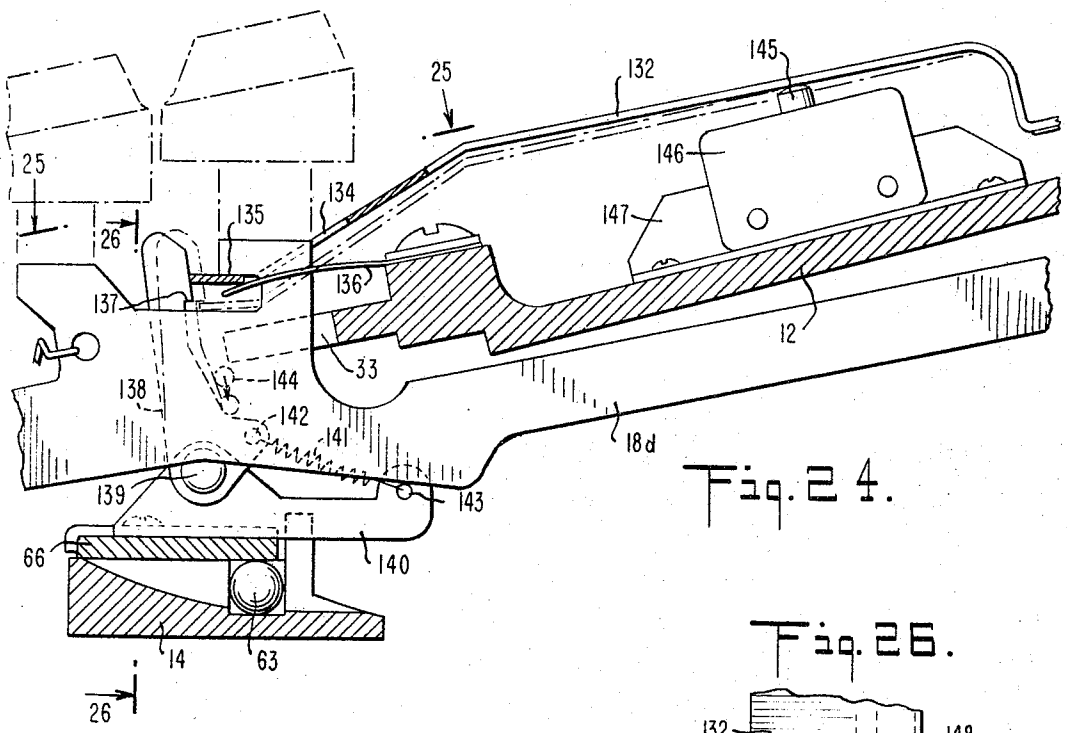

Fig. 24.

Fig. 25.

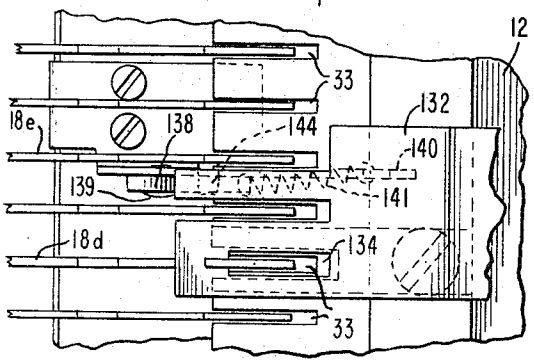

Fig. 26.

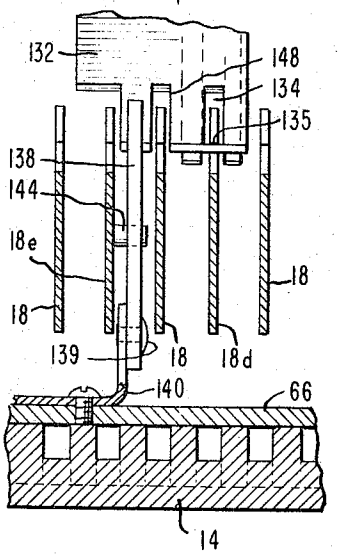

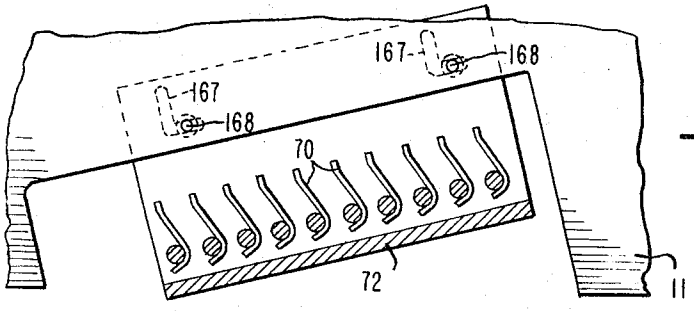

Fig. 30.

KEYBOARD MECHANISM HAVING LATCH MEANS

Filed Jan. 25, 1966 10 Sheets-Sheet 9

Fig. 29.

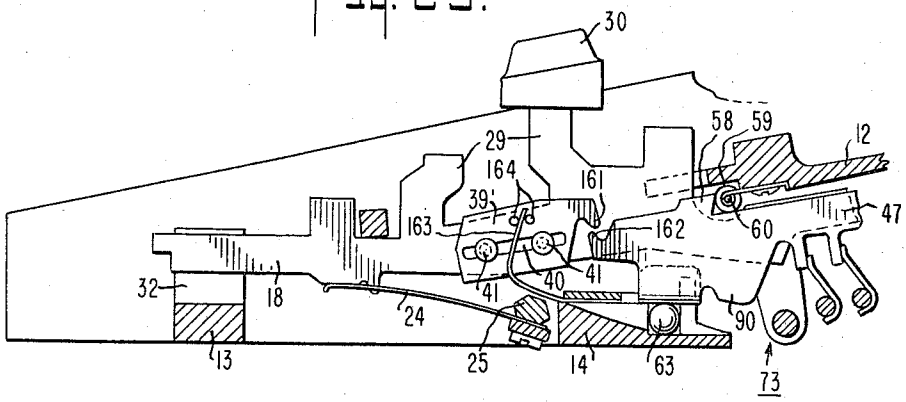

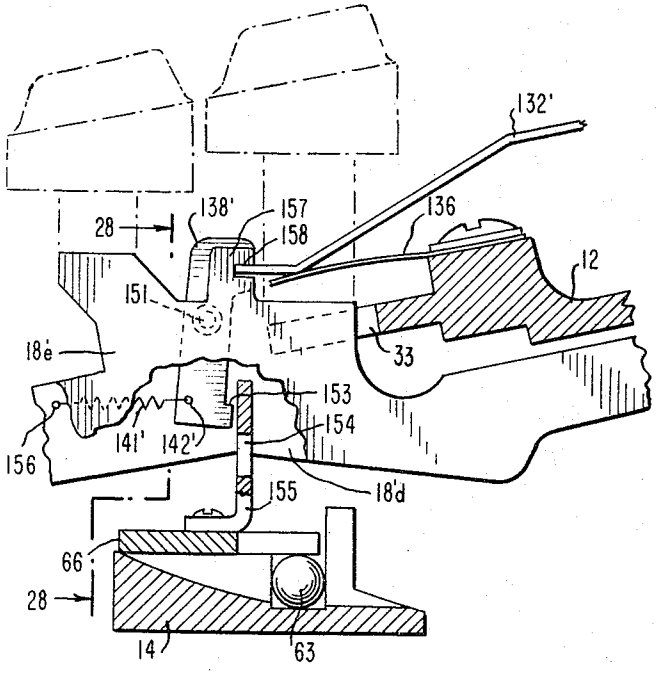

Fig. 27.

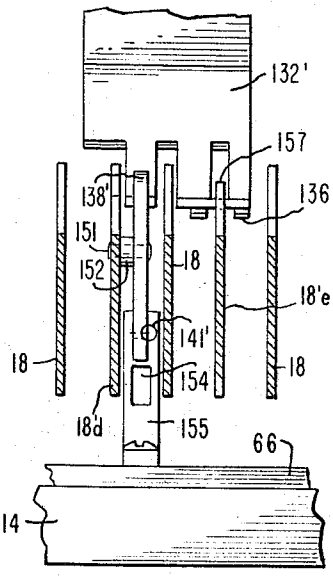

Fig. 28.

June 27, 1967 H. ST. LAWRENCE DANNATT 3,327,828

KEYBOARD MECHANISM HAVING LATCH MEANS

Filed Jan. 25, 1966 10 Sheets-Sheet 10

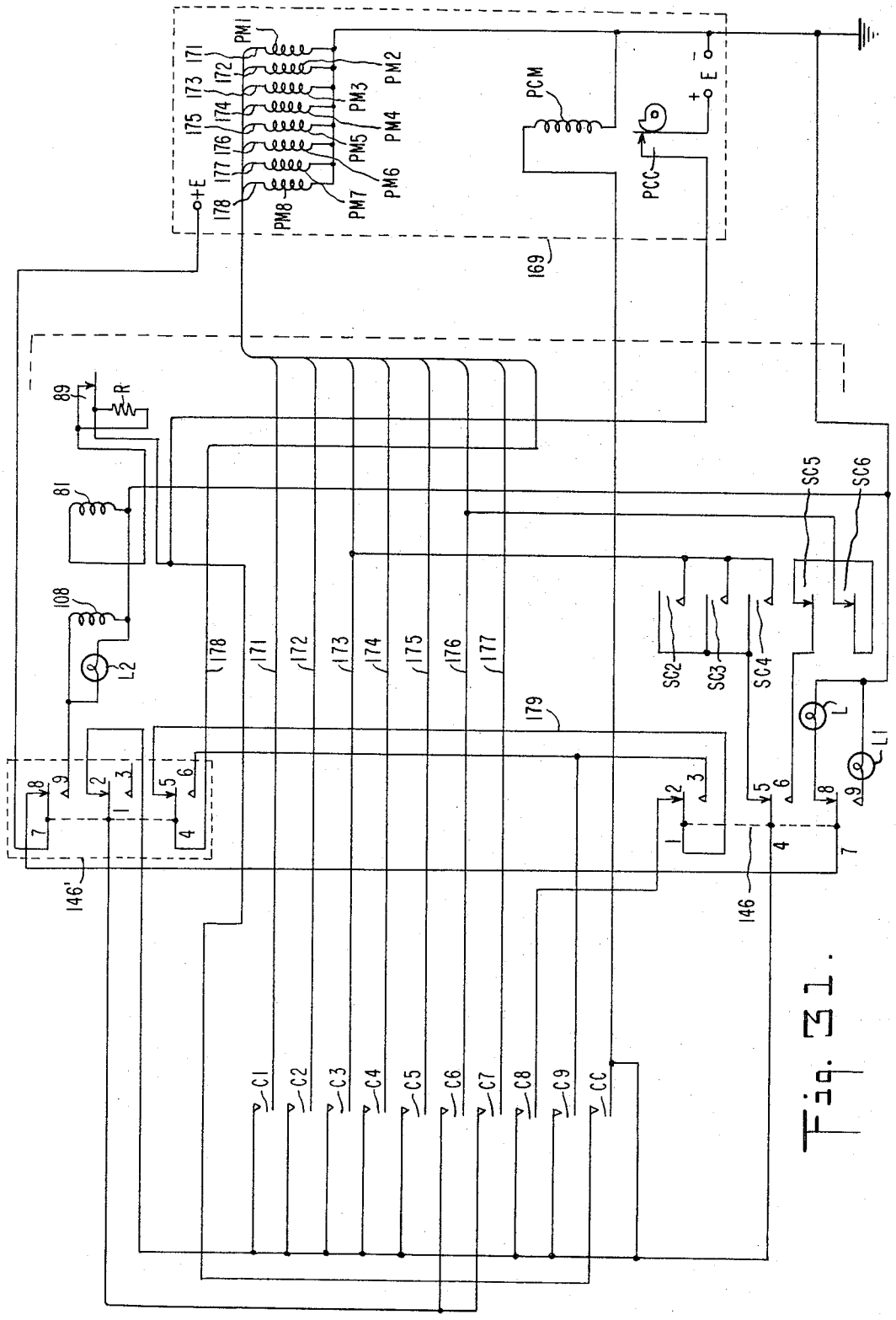

Fig. 31.

United States Patent Office 3,327,828
Patented June 27, 1967

3,327,828

KEYBOARD MECHANISM HAVING LATCH MEANS

Hugh St. Lawrence Dannatt, Rochester, N.Y., assignor to Friden, Inc., a corporation of Delaware

Filed Jan. 25, 1966, Ser. No. 522,873
18 Claims. (Cl. 197—98)

ABSTRACT OF THE DISCLOSURE

A keyboard mechanism, having a manual keyboard at its forward end, is provided with a plurality of code slides each having a rearwardly directed and sharply pointed nose intermediate its length and providing a latch portion forming a rearwardly directed latch notch acutely angled with respect the longitudinal axis of the slide member. The slide members are supported for longitudinal movement accompanied by pivotal movement of at least their latch portion, and the acutely angled latch notch of each is engageable with an individual latch roller to latch the slide member in a latched position restrained against longitudinal movement to an operated position. Each slide member is spring-biased to move longitudinally to its operated position when unlatched from its latch roller, but until unlatched this bias retains the rearwardly directed pointed-nose latch portion of each slide member in latchable engagement with its associated latch roller due to the acutely angled latch notch of the slide member. A plurality of manually operable key levers are positioned in interleaved relation to the slide members and are supported for movement between non-operated and operated positions. Each key lever has a coupling structure for so coupling it with an individual one of the slide members that manual actuation of a key lever through an initial range toward operated position angularly moves the pointed nose of its associated slide member an incremental displacement beyond the point of latchable engagement with the associated latch roller as established by the axis of rotation of the latter, after which the slide member is permitted to move without restraint to its operated position. An operated slide is power restored to its latched position, and in operated position selects a code corresponding to the individual key lever manually operated.

The present invention relates to keyboard mechanisms and, more particularly, to such mechanisms having utility in manually entering data into machines which may reproduce, record, transmit and/or otherwise process the entered data.

Many data processing machines use keyboard mechanisms for manually entering alphanumeric characters, symbols, and functional-control items of data information into the machine. A familiar example of this is in the ordinary typewriter where the manually operable key levers of the keyboard provide a form of data entry by mechanical selective operation of machine elements which, upon selection, operate to provide typed reproduction of items of entered data according to a typing format established by selective items of entered functional-control information. Another familiar example is in one form of tabulating card punch machine where the manually operative keyboard is electrically connected by key lever selective coded electrical circuits to effect recording in tabulating cards of coded items of alphanumeric data, symbols, and functional-control information.

In all such applications, it is usually desirable that the entry of data information be as rapid as permitted by

the rate at which the machine will accept data or as limited only by the rapidity with which an operator may accomplish successive key manipulations. At the same time, it is usually equally desirable that the operator shall not manipulate two or more keyboard keys at the same time or successively at a higher rate than that at which the associated machine will accept data. It is usually also desirable that even a moderately prolonged period of key depression shall not result in repetitive entry of the same item of data information. When for any reason the machine cannot accept the entry of data, it is desirable that the keyboard be locked against any manually manipulation.

With a view to enabling a high rate of operator key manipulation as rapid as data entry is permitted by the associated machine, it has heretofore been proposed that a keyboard be provided with key levers mechanically coupled through an anti-repeat pawl to effect an unlatching movement of a longitudinally reciprocal slide normally latched in one longitudinal position. Key lever unlatching of the slide permits it to move longitudinally to a second data entry position, and at the same time to effect insertion of an interposer member in an interlock structure to prevent interposer-entry unlatching of a second slide until the first has restored to latched position under power reset. The anti-repeat pawl intercoupling each key lever and assicated slide permits restoration of an unlatched slide to its latch position even though the associated key remains manually depressed. Thus the data entered by the depressed key is not repeated and another key may be depressed while the first remains in depressed position. The slide upon being moved to unlatched position initiates a slide reset operation which occupies a fixed interval of time selected to be within the rate at which the associated machine accepts entry of successive items of data information. These prior proposed keyboard mechanisms inherently involve a rather complex and bulky keyboard structure, and exhibit variable amounts of frictional unlatched forces tending to result in uneven and disturbing key touch manipulations which can be avoided only by structural provisions requiring undesirably excessive amounts of operational key pressures. They also operate with higher noise levels than is desirable. The slides provide coded items of entry data information, but when once coded do not readily enable a change of code without an extensive and undesirable amount of keyboard disassembly.

It is an object of the present invention to provide a new and improved keyboard mechanism which avoids one or more of the disadvantages and limitations of prior such mechanisms.

It is a further object of the invention to provide a novel keyboard mechanism of compact and relatively simple construction enabling a low and pleasing keyboard silhouette and one exhibiting both smooth yet firm key manipulation and quiet operation.

It is yet a further object of the invention to provide an improved keyboard mechanism possessing high versatility for numerous and diverse applications, combined with consistent dependability over prolonged periods of operation, and one which enables a very easily and simply effected change in the coding of data information entered by the keyboard.

It is yet a further object of the invention to provide a relatively simple and inexpensive keyboard mechanism having a coding slide actuation structure which also enables keyboard lockup to be effected in a positive and dependable manner under all operational conditions, and one additionally possessing desirable anti-repeat and key interlock features of operation.

Other and further objects and advantages of the invention will appear as the detailed description thereof

proceeds in the light of the drawings forming a part of this application and in which:

FIG. 1 is a slide elevational view in cross-section illustrating a keyboard mechanism embodying the present invention in a particular form;

FIG. 2 is a slide elevational view in cross-section of the FIG. 1 structure and shows more particularly the configuration of coding slide members employed in the keyboard mechanism and constructional features particularly concerned with the operation of the slide members;

FIG. 3 is a plan view, particularly in cross-section, of the FIG. 1 keyboard mechanism;

FIGS. 4–7 are enlarged fragmentary views illustrating particular constructional details of the keyboard mechanism;

FIGS. 8 and 9 are enlarged fragmentary cross-sectional views illustrating features of construction and operation of a key lever interlock structure utilized in the keyboard mechanism;

FIG. 10 is a side elevational view illustrating a drive structure used in the keyboard mechanism to effect angular drive movement of a slide member reset bail structure;

FIG. 11 is an enlarged fragmentary view illustrating a pair of electrical contacts and the manner of their operation by pivotal motion of the slide member reset bail;

FIGS. 12–16 are enlarged side elevational cross-sectional views used to illustrate sequential operational movements of certain components concerned with the operational unlatching and relatching of the coding slide members employed in the keyboard mechanism;

FIG. 17 is an enlarged side elevational view, partly broken away, illustrating a key lever touch pressure manual control arrangement used in the keyboard mechanism, and FIG. 18 is an enlarged fragmentary view of a spring comb plate used in the touch pressure control arrangement;

FIG. 19 is an end elevational view illustrating the construction of a selective-group key lever lockup structure which may be used in the keyboard mechanism;

FIGS. 20–23 illustrate in plan view and by enlarged fragmentary side elevational views the construction of space bar and control bar support structures and the mechanical intercoupling by which these structures operate preselected key levers of the keyboard mechanism;

FIGS. 24–26 are enlarged fragmentary side elevational, plan, and end elevational views illustrating the construction of a key lever operated switch-actuating structure used in the keyboard mechanism, FIGS. 27 and 28 illustrating in enlarged fragmentary side elevational and end elevational views a modified form of this switch-actuating structure;

FIG. 29 is a fragmentary side elevational view of a modified form of coding slide control structure suitable for use in the keyboard mechanism;

FIG. 30 is a fragmentary side elevational view illustrating the manner of attaching and supporting an integral code selector structure on the keyboard mechanism frame structure; and

FIG. 31 is an electrical circuit diagram showing a representative circuit arrangement interconnecting the various electrical contacts operated by the keyboard mechanism with an associated data utilizing equipment.

Referring now more particularly to FIGS. 1–3 of the drawings, a keyboard mechanism embodying the present invention includes a keyboard frame structure comprised by side plates **10** and **11** and secured in spaced relation by a base plate **12** and plural spacer bars **13–17**. A plurality of key levers **18** are positioned in spaced relation between the end plates **10**, **11** and are supported for pivotal motion by integrally formed and laterally extending rear arms **19** which are received in individual comb slots **20** of the spacer bar **15** and are pivotally mounted on a rod **21** extending between the frame side plates and fixedly positioned in aligned apertures of the comb teeth **22**. The key levers **18** are biased upwardly against a common transverse stop bar **23**, supported between the frame side plates **10** and **11**, by a comb spring plate **24** hereinafter described more fully and which is secured to a spring tension bar **25** journaled by the side plates **10** and **11** for adjustable rotation in a manner presently to be explained.

The key levers **18** are conveniently fabricated with like configurations having plural laterally extending and forwardly positioned projections **29** which are adapted to be received and retained in sockets of key buttons **30**, the spacings of the projections **29** on the key levers defining parallel key button rows conveniently spaced for finger manipulation of the key buttons by an operator. Each key lever **18** in the assembly has all of the projections **29** except one cut off at a convenient elevation, such as the elevation **31**, the one retained projection on the key lever being in a selected button row and having a key button **30** mounted on its end. The key levers **28** are spaced apart in conventional manner by slightly more than the key button width. They are retained in this spaced arrangement and pivotally guided at their forward ends by comb slots **32** provided in the upper edge of the spacer bar **13**, are similarly spaced and guided centrally by comb slots **33** formed in the forward edge of the base plate **12**, and are spaced and guided at their rear ends by comb slots **34** provided in a rear lateral projection **35** of the base plate **12**.

An elongated pawl **39** having a central longitudinal slot **40** is supported for angular and longitudinal movement on the side of each key lever **18** by enlarged head studs **41** extending through the slot **40**. Each pawl is provided with a lateral projection **42** which anchors one end of a bias spring **43** having its opposite end received in an aperture **44** provided in the base portion of the rearwardly adjacent key lever projection **29**. The spring **43** biases the pawl **39** in a clockwise direction as seen in FIG. 1 normally to engage, in the rest position of its associated key lever, the forward end of the pawl with the stop bar **23**. The rear end of the pawl **39** is bent over laterally to provide an actuating projection **45** which extends through an aperture **46** of the key lever into engageable relation with the forward end of a slide member **47** associated with each key lever and supported for pivotal and longitudinal movement in a manner now to be considered.

As just indicated, there is associated with each key lever **18** a slide member **47** having a configuration shown more clearly in FIG. 2. The slide members **47**, as shown by the enlarged fragmentary views of FIGS. 4–7, are positioned in side by side relation with their associated key levers but are maintained in slight spaced relation to the associated key lever by a small dimple **48** pressed laterally from the slide member and also by short longitudinally extending plateaus **49** likewise pressed laterally from the slide member, the dimple **48** and plateaus **49** minimizing the frictional engagement between the slide member and its associated key lever. The slide members **47** are pivotally supported on a rod **50** which extends through aligned apertures in the comb teeth of the base plate projection **35** and which is received in an elongated slot **51** of each slide member to permit a limited amount of longitudinal movement of the slide member. While the rod **50** could support and guide the rear end of each slide member **47** in its longitudinal movement, the sides of the slide member slot **51** would in such case preferably need to be polished to minimize the frictional forces involved. In practice, it is preferred to form the slot **51** slightly wider than the diameter of the rod **50** and to support the slide member during its longitudinal motion upon a pin **52** which engages a notch **53** in the rearmost bottom edge of the slide member and is fixedly secured at the end of an arm **54** extending into an associated comb slot **20** of the spacer bar **15** and pivotally supported on the

rod 21. Each of the slide members 47 is provided at its rear end with an overturned ear 38 which is engaged by the slightly overturned end of an individual tooth of a comb spring plate 57, secured to a sloping rear edge of the spacer bar 15 as shown, to provide a bias force urging movement of the slide member in a rearward direction and urging movement of the rear end of the slide member in a downward direction to maintain good engagement of the notch 53 with the pin 52. The slide members 47 are normally latched against such rearward movement, however, by a slide member latch portion 58 which engages a latch roller 59 individual to the slide member. These latch rollers are rotatably journaled on a wire 60 retained by the overturned end of a plate 61 which is secured to the base plate 12 at its forward end as shown and is slotted to receive the latch rollers 59.

Upon finger depression of a key button 30 pivotally to depress the associated key lever 18, the pawl actuating projection 45 of the pawl 39 associated with the depressed key lever engages the forward end of the associated slide member 47 and pivots it about the pin 52 while moving it slightly forward to disengage the slide member latch portion 58 from its associated latch roller 59. Upon latching disengagement of the latch portion 58 and latch roller 59, an overturned interlock portion 62 (FIG. 8) of the slide member begins to be inserted between balls 63 (FIG. 9) of an interlock structure formed in the spacer bar 14 by a longitudinal ball retaining slot 64 and transverse comb slots 65 permitting entry of the interlock portion 62 between adjacent ones of the interlock balls 63. A comb plate 66, secured to the upper surface of the spacer bar 14, retains the interlock balls 63 in the longitudinal slot 64 of the spacer bar 14 while also permitting the interlock portion 62 of the slide members to be inserted between the interlock balls 63. The length of the longitudinal slot 64 of the spacer bar 14 and the number of interlock balls 63 retained in this slot are such that, as indicated in FIG. 9, only one interlock portion 62 of any slide member may be inserted sufficiently far between adjacent interlock balls 63 as to release the latch portion 58 of the slide member from its associated latch roller 59. The interlock portions of all other slide members are thereupon prevented from entering between the interlock balls 63 sufficiently far as to enable another slide member to become likewise unlatched. Thus only one slide member may become unlatched at a given time, and all other slide members are mechanically interlocked in their latched positions until the one slide member has been restored to latched position in a manner next to be considered.

As will be evident from the drawings, the latch portion 58 of each slide member 47 has a sharply pointed nose configuration providing an angled edge surface in engagement with its associated latch roller 59. So long as the apex or nose of the latch portion 58 is above the axis of the roller support wire 60, the spring bias force exerted by the comb spring plate 57 on the slide member tends to move the latch portion 58 on its associated latch roller 59 upward into fully latched position of the slide member 47. Thus if finger pressure on the key button 30 in pivoting the slide member 47 in the manner just explained should be released at any time prior to the time when the slide member latch portion 58 is positioned with its nose an incremental distance above the axis of the roller wire 60, the slide member will restore to fully latched position. As soon as the slide member 47 has been pivoted by finger button pressure sufficiently far that the nose of the latch portion 58 is an incremental distance below the axis of the roller wire 60, the bias force exerted by the comb spring plate 57 on the slide member 47 will cause the nose of the latch portion 58 to ride down on the now rotating latch roller 59. The slide member 47 will now begin to move longitudinally to the rear, with the latch portion 58 continuing in engagement with the now rotating latch roller 59 even to the extent that the latch roller is eventually engaged by the uppermost top edge surface of the latch portion 58. While this is occurring, the interlock portion 62 of the slide member moves down between and rearwardly through the interlock balls 63 and the rearward longitudinal movement of the slide member 47 continues until halted by engagement of the rod 50 with the forward edge of the slide member slot 51.

The lower edge of each slide member 47 is provided with one or more coding teeth 69 which engage and pivotally move individual ones of a plurality of coding vanes 70, which extend transversely of the keyboard mechanism and are operated in common by a corresponding coding tooth 69 of all the slide members 47, secured for pivotal motion on individual ones of a plurality of vane support rods 71 journaled in the end walls of a U-shaped code selector frame 72. The latter is secured, in a manner presently to be explained more fully, by machine screws extending through slots provided in its end walls and threaded into the side plates 10 and 11 of the keyboard mechanism frame. The vane support rods 71 have a common end extending beyond one end wall of the code selector frame 72 and rotary motion of each rod, effected by pivotal motion of its associated coding vane upon rearward longitudinal motion of a slide member 47 as just described, effects in conventional manner the closure of a pair of normally open electrical code selector contacts (not shown) individual to each rod. These contacts are supported upon the end wall of the code selector frame 72, and may be similar in construction and have a similar type of coding-vane support rod actuation as that shown in the Blodgett U.S. Patent No. 2,700,447. By providing one or more coding teeth 69 at preselected ones of the tooth positions on each slide member 47, and by omitting coding teeth from all other tooth positions thereon, each slide member 47 in longitudinally moving to its rearmost unlatched position effects closure of an individual combination of the electrical code selector contacts thereby distinctively to identify the individual alphanumeric character or symbol or functional control item of data information assigned to the individual key button and key lever which unlatched the slide member by manual manipulation of the key button. If desired, any one or more or all of the slide members may also operate an electrical contact pair or plural contact stack. This is accomplished by fixedly securing to the rear end of such slide member a projecting switch actuator 67 of insulating material having edge projections 68 engaging the movable contact of each slide contact pair SC supported on the spacer bar 16 or 17 (or supported in alternation on these spacer bars where contacts SC are provided for each of a contiguous group of slide members).

One coding tooth 69 at a preselected tooth position is provided on all of the slide members 47, so that one common contact pair is operated to closed contact position by unlatched longitudinal motion of all of the slide members. This common contact pair is so operated to closed contact position, however, that its contacts close later and open earlier than any of the other code selector contacts and electrical energization is supplied through these common contacts to energize the remaining code selector contacts as will be explained more fully hereinafter. These common contacts also initiate a cycle of operation of the associated equipment which utilizes each item of coded data information generated by the energized code selector contacts in a manner hereinafter explained. The associated equipment, after progressing through a portion of its cycle of operation, supplies return electrical energization to the keyboard to effect latch restore movement of a latch restore bail 73 by means of a bail actuating structure illustrated in FIG. 10. The latch restore bail 73 is comprised by a rod 74 which extends laterally between the side plates 10 and 11 of the keyboard mechanism and is supported at its ends on arms 75 pivoted on machine screws 76 threaded into the side plates. In particular, the latch restore bail 73 is movably pivoted between a rearmost position shown in full lines

and a forward position indicated in broken lines in FIG. 10. This is accomplished by mechanical connection of a bail arm **75** through a link member **77** to a pivot stud **78** provided on one end of an arm **79** which is secured on a shaft **80** of a rotary solenoid-operated actuator **81** mounted on a supporting and heat-dissipation plate **82** secured by spacing blocks **83** to the outside of the side plate **11** of the keyboard frame as illustrated more particularly in FIG. 3. A helical spring **84** has one end anchored on the stud **78** and its other end anchored on a stud **79** fixed to the side plate **11**, and biases the latch restore bail **73** to its forward position shown in broken lines in FIG. 10 whenever the solenoid actuator **81** is deenergized. The forward spring-bias position of the restore bail **73** is established by engagement of an extension **85** of the arm **79** with a fixed stop member **86** secured to the heat-dissipation plate **82**, this stop position of the extension **85** being indicated in broken lines in FIG. 10. Upon energization of the solenoid actuator **81**, however, the arm **79** is rotated counterclockwise as seen in FIG. 10 to engage the extension **85** with a second fixed stop member **87** also secured on the plate **82** and which establishes the rearmost position of the latch restore bail **73** shown in full lines in FIG. 10.

The solenoid actuator **81** is normally maintained energized by the associated equipment to which coded data information is supplied by manual manipulation of the keyboard mechanism. The latch restore bail **73** is thus normally maintained in its rearmost position where, as illustrated in FIG. 11, an insulating link **88** on an arm **75** separates the contacts of a switch **89** supported on the side plate **10** (FIG. 3) and used for a purpose hereinafter described. Partial completion of each cycle of operation of the associated equipment, in response to the supply thereto of an item of coded data information, results in brief deenergization by the equipment of the solenoid actuator **81**. The latch restore bail **73** is thereupon pivoted by the bias force of the spring **84** from its rearmost position to its forward position, and this motion of the latch restore bail restores to latched position any slide member **47** which has previously been unlatched by manual key button actuation in the manner earlier described. The manner with which the slide members **47** are unlatched and thereafter are moved longitudinally forwardly to relatched position by action of the latch restore bail **73** will now be considered by reference to FIGS. 12–16 which illustrate a complete cycle of slide member unlatching and restoration to latched position.

FIG. 12 illustrates the normal latched position of any slide member **47** prior to manual pivotal actuation of a key lever **18**, the latter thus engaging the stop bar **23** and the latch portion **58** of the slide member being in full latching engagement with its associated latch roller **59**. The latch restore bail **73** is held in its rearmost position at this time by energization of the solenoid actuator **81** as earlier described.

In FIG. 13, the key lever **18** has been manually depressed sufficiently far that the associated pawl **39** has engaged and pivoted the slide member **47** beneath its point of latched engagement with the associated latch roller **59**. The nose of the latch portion **58** of the slide member **47** accordingly has moved below the axis of the roller wire **60**, so that latching engagement can no longer be maintained by reason of the rearward force exerted by an associated finger of the comb spring plate **57** on the slide member as earlier explained. As the slide member now moves downward and longitudinally in a rearward direction, the nose of the latching portion **58** of the slide member continues to engage and rotate the latch roller **59** thus to minimize any frictional forces which may be associated with the unlatching operation and thereby reduce the downward force necessarily exerted on the key lever to effect unlatching of the slide member. It may be noted, as illustrated in FIG. 13, that the force exerted by the actuating projection **45** of the pawl **39** on the end of the slide member **47** maintains the pawl **39** substantially nonpivoted on the key lever **18** notwithstanding the bias force exerted by the spring **43** on the pawl. As also illustrated in FIG. 13, it may be noted that the interlock portion **62** of the slide member has now moved between adjacent balls **63** of the interlock structure to prevent similar unlatching of any other slide member.

FIG. 14 illustrates the positioning of the key lever **18** near the end of its downward stroke, and shows the rearmost position of the unlatched slide member **47** at the moment when the latch restore bail **73** is about to initiate a cycle of reciprocal pivotal motion to restore the unlatched slide to latched position. As the slide member **47** moves rearwardly to its rearmost position, the coding vanes are pivoted by the coding teeth **69** from their positions indicated in broken lines to their positions shown in full lines and in thus pivoting operate against the bias spring force of the code selector contacts. This bias force tends to pivot the slide member **47** upwardly at its forward end, and the upper edge surface of its latch portion **58** accordingly tends to continue to maintain rolling contact with the latch roller **59** and thus minimize frictional drag on the slide member motion. It will be noted in FIG. 14 that the rearward motion of the slide member has effected disengagement of its forward end with the pawl-actuating projection **45**, and the pawl spring **43** thereupon pivots the pawl **39** on the key lever **18** about the forward stud **41** and until the rearmost stud **41** limits the pivotal movement by its engagement with the upper edge of the pawl slot **40**.

The purpose of this pivotal movement of the pawl **39** is made evident in FIG. 15 which illustrates the key lever **18** remaining in its depressed position and the slide member partially restored to near latchable position by action of the latch restore bail **73**. It will be recalled that the solenoid actuator **81** is deenergized by the associated equipment as the latter initiated a cycle of operation upon closure of the code selector common contacts as earlier explained, and the resultant spring-tension effected pivotal displacement of the restore bail **73** in forward direction causes it to engage the restore bail rod **74** with a downwardly projecting restore portion **90** provided on the lower edge of the slide member **47** so that continued forward motion of the restore bail moves the slide member in forward direction toward its relatchable position with the associated latch roller **60**. The slide restore portion **90** has a sloping cam surface **91** which when engaged by the restore bail rod **74** exerts a pivotal upward force on the forward end of the slide member to lift it into latchable engagement with the associated latch roller **59**. Here again the continued engagement of the upper flat surface of the latch portion **58** with the latch roller **59** minimizes the frictional forces involved in the slide restore operation. As illustrated in FIG. 15, the forward end of the slide member **47** while moving in forward direction engages the side of the pawl actuating projection **45** and forces the pawl **39** forwardly on the key lever **18** against the tension of the spring **43** so that the slide member **47** may move in forward direction to fully latched position without restoring unlatching engagement of the pawl actuating projection **45** with the upper end surface of the slide member. As the latch restore bail **73** continues its forward movement, the restore bail rod **74** begins to ride under the nose of the slide restore portion **90** and thus forceably moves the forward end of the slide member **47** upwardly toward latching engagement of its latch portion **58** with the latch roller **59**. The restore bail rod **74** moves beneath the slide restore portion **90** just after the nose of the latch portion **58** of the slide is elevated an incremental amount above the axis of the latch roller support wire **60**, at which time the sloping edge surface of the latch restore portion **58** lifts the slide member **47** upward to fully latched position on the latch roller **59** by reason of the rearwardly directed force exerted by the comb spring plate **57** (FIG. 2) on the slide

member. This disengages the slide restore portion **90** and restore bail rod **74** so that the restore bail **73** thereafter completes its forward motion without restraint by any of the latched slide members.

FIG. 16 illustrates the key lever **18** yet in fully depressed position, the slide member **47** in fully latched position with its interlock portion **62** out of engagement with the interlock balls **63**, and the restore bail rod **74** now moved to its forwardmost position. In this position, the restore bail rod **74** underlies the restore portion **90** of all slide members and thereby locks them against pivotal motion to unlatched position until the restore bail rod has again moved rearwardly sufficiently far as to be no longer engaged by the restore portion **90** of any slide member which may be key-lever pivoted to unlatched position. Thus continued deenergization of the solenoid actuator **81**, as by removal of power from the associated data utilizing equipment, causes the restore bail to be biased by its bias spring **84** to its forwardmost position where it locks up all key levers against manual manipulation. As illustrated in FIG. 16, the pawl **39** remains longitudinally displaced on the key lever **18** with the pawl actuating projection **45** yet in side abutting relation to the end of the latched slide member so that the latter cannot again be unlatched by the pawl **39** until the key lever **18** is once more restored to its normal uppermost or non-operated position to reestablish the overlapping relation between the pawl actuating projection **45** and the end of the slide member as illustrated in FIG. 12. Even though the key lever **18** remains so depressed for a prolonged interval, another key lever may be manually depressed to pivot and unlatch its associated slide member as soon as the restore bail has been moved rearwardly by reenergization of the solenoid actuator **81**.

It has been found in practice that the latch rollers **59** rotate through unequal ranges of angular motion during the rearward and forward movements of their associated slide members **47**, and this has the important advantage of more evenly distributing the wear on their axial bore journal surfaces and the wear on the peripheral bearing surface of their support wire **60** (which is usually approximately one-third the external diameter of the latch rollers).

FIGS. 17 and 18 illustrate the manner with which the key levers are spring-biased by the comb spring plate **24** against the fixed stop bar **23**, and FIG. 17 also illustrates the manual control by which this key lever spring tension may be adjusted to suit each operator's touch. The teeth of the comb spring plate **24** are provided near the ends with rectangular apertures **94**, and these apertures are engaged by a small projection **95** extending as shown from the lower edge of the key lever. The spring tension bar **25**, journaled in the end plates **10** and **11** as earlier explained, has an arm **96** affixed to one of its ends extending outside of the side plate **10**. The end of the arm **96** is provided with a projecting stud **97** which is biased by the spring comb plate **24** into engagement with a cam surface **98** provided on the inside surface of a cup-shaped thumb wheel **99** rotationally supported by a shouldered machine screw **100** on the outer surface of the side plate **10**. The cam surface **98** of the thumb wheel **99** is forward with several linear portions joined by obtuse angled portions which, upon engagement therewith of the stud **97**, tend to provide a small detent action establishing a number of preselected angular positions of the thumb wheel **99**. For ease of manual manipulation, these preselected detent positions may be visually indicated to the operator by indicia (not shown) provided on the periphery of the thumb wheel so that the operator may readily turn the latter to a position at which the resultant bias force of the comb spring plate **24** provides a desired value of key button touch force required to depress the key levers.

It is occasionally desirable to permit operation of a large group of key levers while locking a smaller group thereof against operation. This, for example, permits all of the

key levers to be operated in "lower case" and a majority of the key levers also to be operated in "upper case" for generation of coded alphanumeric charcaters, symbols and functional control items of data information while locking the remaining key levers in "upper case" against operation. Thus referring to FIGS. 17 and 19, selective lockup of particular key levers may be accomplished by a lockup vane secured to and pivotally supported by stud end shafts **102** and **103** journaled in the side plates **10** and **11**. The stud shaft **103** has an arm **104** affixed near its end, the arm **104** supporting a pin **105** by which a yoke **106** is connected to the arm **104**. As shown more clearly in FIG. 3, the yoke **106** is affixed to the end of a movable armature **107** of an electromagnet **108**. The lockup vane **101** is normally biased by a helical tension spring **109**, anchored at one end by a stud **110** affixed to the side plate **11** and anchored at its opposite end by the pin **105**, to a position out of engagement with a notch **111** provided in the ends of the key levers **18** as shown by the left-hand broken line position of the vane **101** in FIG. 17. Energization of the electromagnet **108**, however, pivots the lockup vane **101** against the bias of the spring **109** to position the vane in engageable relation with the notches **111** of the key levers **18** where the vane locks against manual operation all key levers except those which have positions corresponding to notches **112** provided in the lockup vane **101**. Thus all of the key levers may be operated in the deenergized state of the electromagnet **108** whereas only preselected ones of the key levers, as established by the positioning of the lockup vane notches **112**, may be manually operated during the energized state of electromagnet **108**. If desired, a second such lockup vane may be provided for selective lockup of a further group of the key levers, this second vane occupying the position of the lockup vane **101'** shown in broken lines in FIG. 1 where the vane is adapted to engage the lower edge surface of the key levers **18**. The lockup vane **101'**, if used, may have the same construction as the lockup vane **101** just described and may be similarly operated by a spring biased electromagnet (not shown) as in the case of the lockup vane **101** just described.

The usual typewriter form of keyboard mechanism is conventionally provided with an elongated space bar positioned at the lower edge of the keyboard. This space bar, and shorter auxiliary control bars, are provided in the present beyboard mechanism as shown in FIGS. 21–23. The structure here illustrated and described below is disclosed and claimed in the copending application of John F. Herrmann entitled Control Bar Support and Actuation Structure, Ser. No. (Dkt. 6374), and assigned to the same assignee as the present application.

An inner control bar **115** (FIGS. 20 and 21) is supported on a platform frame **116** having depending spaced leg portions **117** which are pivotally supported by short shafts **118** and **119** journaled in the ends of respective link members **120** and **121** in turn pivotally supported at their opposite ends on respective shafts **122** and **123**. The latter extend across the keyboard mechanism and are journaled in plural spaced support frame structures **124** each having a base plate **125** secured to the spacer bar **13** as shown. The shaft **122** is journaled in one end of a split-end clamp bar **114** fixedly clamped at its split end **128** and by a machine screw **129** to the shaft **118** which is elongated and has an arm **126** affixed to its end, the free end of the arm **126** engaging a notch **127** provided in the end of an outer key lever **18***a*. Thus as the control bar **115** is manually depressed, the platform frame **116** moves downward under support of the pivotal links **120** and **121** to rotate the shaft **118** and its affixed arm **126**, thereby depressing the key lever **18***a*. The platform frame **116** is biased by a spring **130** to non-depressed position where a stop arm **116***a* (shown more clearly in FIG. 23) of the frame **116** engages a bushing **131** on the shaft **122**.

An intermediate control bar **115'** (FIGS. 21 and 22) is similarly arranged and supported by a platform frame

116' having the same configuration as the platform frame 116 and which is pivotally supported on a shaft 118' and a short shaft corresponding to the shaft 119. The latter are journaled in an upper link 120' and a lower link corresponding to the link 121 which are pivotally supported on the respective shafts 122 and 123. The split-end clamp bar 114' is journaled on the shaft 118' and its slit end is clamped by a machine screw 129' on the shaft 122. The latter extends to the side as shown in FIG. 21 and has affixed to its end an arm 126' engaging a notch 127' of a side key lever 18*b*. Thus manual depression of the control bar 115' effects depression of the key lever 18*b* in the same manner as just described with respect the operation of the control bar 115 and the key lever 18*a*.

The conventional space bar 115'' (FIGS. 21 and 23) is supported in the same manner as the control bar 115 just described, support and actuating elements of the space bar corresponding to similar support and actuating elements of the control bar 115 being designated by similar reference numerals with a double prime notation, and manual depression of the space bar 115'' effects through the arm 126'' depression of a space key lever 18*c*.

"Upper case" and "lower case" key levers are provided in the present keyboard mechanism. The "upper case" key lever when depressed operates a switch actuating structure to a depressed position where it remains until released by manual actuation of a "lower case" key lever. The structure by which this operation is accomplished is illustrated in FIGS. 24–26. The structure includes a cantilever spring member 132 secured at its rear end to an upstanding rear edge transverse portion 133 of the base plate 12 and having at its forward end a rectangular notch 134 which is engaged with a forward-edge notch 135 of the "upper case" key lever 18*d*. The forward end of the spring member 132 is biased upwardly by a small cantilever spring 136 secured as shown to the base plate 12 and extending beneath the forward end of the spring member 132. Upon manual depression of the "upper case" key lever 18*d*, the notch 135 of this key lever engages and depresses the forward end of the spring member 132 to the position shown in broken lines where the end of the spring member 132 is engaged by a latch notch 137 of a latch member 138 pivoted at 139 on a frame structure 140 secured to the upper plate 66 of the interlock structure earlier described. A tension spring 141, having one end engaging an aperture 142 of the latch member 138 and having its opposite end engaging an aperture 143 of the support frame 140, maintains the latch member 138 biased toward latching position with the end of the spring member 132 and thus maintains the latter latched in depressed position when it is so depressed by depression of the "upper case" key lever 18*d* which thereafter restores to its normal non-operated position. The "lower case" key lever 18*e*, positioned near the "upper case" key lever 18*d* as illustrated in FIG. 26, is provided with a laterally extending pin 144 which upon depression of the "lower case" key lever 18*e* engages a sloping rear edge surface of the latch member 138 and rocks the latter out of latching engagement with the end of the spring member 132 thus permitting the latter to restore to its non-depressed position shown in full lines in FIG. 24. While the cantilever spring member 132 remains in depressed position, it depresses an actuating member 145 of each of a plurality of microswitches 146 supported in side-by-side relation by a bracket 147 on the base plate 12, thereby effecting closure of a plurality of normally open microswitch electrical contacts. As illustrated in FIG. 26, the cantilever spring member 132 is provided with an end slot 148 at the position of each key lever 18 positionally intervening between the "upper case" key lever 18*d* and the "lower case" key lever 18*e* so that these intervening key levers operate independently of the microswitch actuating structure just described.

It is often desirable that, as on conventional typewriter keyboards, the "upper case" key lever (also often called a "lock" key) be latched in depressed position to indicate to the operator whether the prevailing operation of the keyboard is in "upper case" or "lower case" status. Latching of the "upper case" key lever in depressed position may be accomplished by the structure illustrated in FIGS. 27 and 28, which is essentially similar in overall construction to that just described in connection with FIGS. 24–26 except for the latching of the "upper case" key lever in depressed position. Structural components in FIGS. 27 and 28 which correspond to similar components of the structure of FIGS. 24–26 are identified by the same reference numerals and analogous components by the same reference numerals primed. As illustrated in FIGS. 27 and 28, the "upper case" key lever 18'*d* pivotally supports by a rivet 151 and spacer bushing 152 a latch member 138' having a notched nose portion which continuously extends over and engages the end of the cantilever spring member 132'. The latch member 138' has a projecting latch portion 153 which is adapted to engage a latch aperture 154 of a bracket 155 secured to the upper plate 66 of the interlock structure earlier described. Upon manual depression of the "upper case" key lever 18'*d*, the force exerted by the latch member 138' on the cantilever spring member 132' in moving the latter to depressed position biases the latch member 138' in counterclockwise direction as seen in FIG. 27 and against the tension of a spring 141', having one hand anchored in an aperture 142' of the latch member 138' and its opposite end anchored in an aperture 156 of the key lever 18'*d*, until the projecting latch portion 153 enters the latch aperture 154. Now when manual pressure is released upon the key lever 18'*d*, the projecting latch portion 153 remains positioned in the latch aperture 154 due to the tensional force of the cantilever spring member 132' aided by the force of the cantilever spring 136. This latched engagement maintains the "upper case" key lever 18'*d* in depressed position. A "lower case" (or shift) key lever 18'*e* is provided on its upper edge with a projection 157 having a notch 158 continuously extending over and engaging the end of the cantilever spring member 132' which causes the "lower case" (or shift) key lever 18'*e* to be depressed with the shift key lever 18'*d*. Now when the "lower case" key lever 18'*e* is manually depressed to relieve the spring tension exerted on the latch member 138' by the cantilever spring members 132' and 136, the tension spring 141' withdraws the projecting latch portion 153 of the member 138' from the latch aperture 154 and this permits both the "upper case" key lever 18'*d* and "lower case" key lever 18'*e* to restore to their normal non-operated positions.

FIG. 29 illustrates a modified form of the keyboard mechanism using a different form of pawl construction carried by each key lever and effective upon manual depression of a key lever to move its corresponding slide member to unlatched position. This construction is essentially similar to that earlier described in connection with FIGS. 1–7, and similar structural components are designated by similar reference numerals and analogous components by similar reference numerals primed, except that the pawl 39' of the present structure is supported by enlarged head rivets 41 and the elongated slot 40 only for longitudinal motion on the side of the associated key lever 18 and has a hooked end portion 161 adapted upon depression of the key lever to engage a forward hooked end portion 162 of the associated slide member 47. The hooked end portion 161 of the pawl 39', upon depression of the associated key lever 18, hooks over the hooked end portion 162 of the associated slide member 47 and maintains this hooked engagement while the slide member 47 is pivotally moved to the unlatched position at which its latch portion 58 is displaced an incremental amount below the axis of the latch roller support wire 60. Upon attaining this angular displacement of the slide member 47, its latch portion 58 begins rapidly to roll beneath the associated latch roller 59 under the influence of the longitudinal bias force exerted on the slide member 47 by its comb spring plate earlier described. This

further angular displacement of the slide member **47** disengages its hooked end portion **162** from the hooked end portion **161** of the pawl **39'** thus releasing the slide member to move to its rearmost position. If the key lever **18** is retained in depressed position at the time the slide member **47** is restored to latched position by operation of the restore bail **73** in the manner earlier described, the forward end of the hooked end portion **162** of the slide **47** engages the end of the hooked end portion **161** of the pawl **39'** and moves the pawl longitudinally on the key lever **18** against the force of a positioning spring finger **163** which may conveniently be comprised by a tooth of a spring comb plate secured to the interlock structure fabricated on the spacer bar **14** and which has its free end positioned between small studs **164** secured to the side of the pawl **39'** as shown. Thus the slide member **47** is permitted to move into fully latched position with the latch roller **59** without interference by the pawl **39'**, and the latter in its longitudinally displaced position on the key lever **18** is ineffective again to unlatch the slide member **47** until the key lever is restored to normal non-operated position in engagement with the stop bar **23** at which time the spring finger **163** returns the pawl **39'** to a position where its hooked end portion **161** overlies the hooked end portion **162** of the slide member **47**. The operation of this modified form of structure is otherwise the same as that earlier described in connection with FIGS. 1–7.

To permit simple and easily effected change of any slide member of the keyboard mechanism with another slide member having different numbers and positions of its coding teeth **69** for purposes of changing the code generated by the corresponding key lever, the code selector frame is movably secured to the slide plates **10** and **11** of the keyboard mechanism as illustrated in FIG. 30. In particular, the end walls of the code selector frame **72** are provided with L-shaped slots **167** as shown and the frame is secured to the side plates **10** and **11** by machine screws **168** which extend through the slots **167** into threaded engagement with the side plates. The code selector frame **72** is normally supported on the side plates **10** and **11** with the mounting screws positioned at the toe of the L-shaped slots **167**, whereby the coding vanes **70** are positioned in an upper forward position with respect the coding teeth of the slide members. To remove one or more slide members from the keyboard mechanism, the securing screws **168** are loosened and the code selector frame is moved to the rear of the keyboard mechanism and is then dropped downwardly to position the securing screws **168** at the top of the L-shaped slots **167**. The restore bail is next dropped by removing the machine screws **76** at each end, and the guide rod **59** (FIGS. 1 and 2) is then withdrawn. Any slide member may then be moved to unlatched position by manual operation of its associated key lever after which the slide member may be withdrawn from the rear of the keyboard mechanism. A new slide member may then be inserted into position in the keyboard mechanism and placed in latched position therein by downward manual manipulation of the rear end of the new slide member. When all changes of slide members have been completed, guide rod **50** is replaced and the code selector frame **72** is repositioned by manually raising it upwardly and pushing it forwardly to reposition the securing screws **168** in the toe of the L-shaped slots **167** after which the securing screws **168** are tightened to maintain the selector frame in assembled position. The restore bail **74** is then repositioned and pivotally secured to the side plates **10** and **11** by the machine screws **76**.

FIG. 31 is an electrical circuit diagram showing a representative circuit arrangement interconnecting the various electrical contacts operated by the present keyboard mechanism with an associated data utilizing equipment shown within the broken-line box **169**. The latter may, by way of example, be a tape punch of the type shown in the Blodgett U.S. Patent No. 2,927,715 having a punch clutch magnet PCM, punch magnets PM1–PM8, and punch cam-actuated contacts PCC which are normally closed but are cam-operated to open contact position during a portion of each punch operating cycle beginning near the outset thereof. It was earlier explained that the coding vanes **70** of the keyboard mechanism are rotated in various combinations by the coding teeth **69** of each slide member **47**, and that the coding vanes upon such rotation close electrical code selector contacts supported on one end plate of the code selector frame **72**. These code selector contacts are identified in FIG. 31 as normally open contacts C1–C9 as are the common contacts CC which it was earlier explained are operated by a coding vane rotated by all slide members. It was also explained that the common contacts CC close later than closure of any of the coding contacts C1–C9 and open earlier than do these coding contacts. For enhanced flexibility of application, the present arrangement is shown as utilizing two microswitch sets **146** and **146'** each operated by a key lever structure of the type heretofore described in connection with FIGS. 24–26 or FIGS. 27 and 28. In the present arrangement, the microswitch set **146** is operated by "upper case" and "lower case" key levers and the microswitch set **146'** by a "control" key lever and a "control release" keylever respectively similar to the key levers **18***d* and **18***e* of FIGS. 24–26 or corresponding key levers of FIGS. 27 and 28 but usually having no associated code selective slide members.

Energizing potential is supplied by the associated equipment **169** through the normally closed cam-actuated contacts PCC to the restore bail solenoid actuator **81** to position the restore bail in its rearward non-restore position and to energize the stationary contact of the common contacts CC. It was explained in connection with FIG. 11 that the restore bail in non-restore position opened electrical contacts **89**, and these contacts in open position insert a resistor R in series with the energizing circuit of the solenoid actuator **81** to reduce the power consumption and thermal heating of the latter. When the common contacts CC close by reason of the unlatched longitudinal movement of any slide member of the keyboard mechanism, energizing potential is supplied directly to stationary contacts of the code selector contacts C1–C5, C8 and C9 and is supplied indirectly through normally closed contacts **1** and **2** of the control microswitch set **146'** to stationary contacts of the code selector contacts C6 and C7. The code selector contacts C1–C9 close in various code selective combinations and the contacts C1–C7 energize corresponding ones of the punch magnets PM1–PM7 through respective conductors **171–177**. The "lower case" parity code selector contacts C8 when closed energize the punch magnet PM8 through a conductor **178**, normally closed contacts **4** and **5** of the control microswitch set **146'**, a conductor **179**, and normally closed contacts **1** and **2** of the "upper-case" and "lower-case" microswitcch set **146** or normally open contacts **1** and **3** of the latter and "upper case" parity code selector contacts C9 when closed.

The common contacts CC upon closing also energize the punch clutch magnet PCM to initiate a cycle of punch operation. Shortly after the initiation of each such cycle of operation, the punch cam-actuated contacts PCC are opened to remove energization from the solenoid actuator **81** and thus effect restore bail relatching of the operated slide in the manner earlier described. The opening of the punch cam-actuated contacts PCC also deenergizes the common contacts CC, and thus the code selector contacts C1–C9, and the punch clutch magnet PCM. The latch restore bail in its restore position closes the contacts **89** so that the current limiting resistor R is removed from the energizing circuit of the solenoid actuator **81** when the latter is again reenergized near the end of the punch cycle by closure of the cam-actuated contacts PCC. Normally closed contacts **4** and **5** of the microswitch set **146** supply energization from the common contacts CC to con-

tacts SC2, SC3, and SC4 which are operated to closed contact position by the slide member associated with three selected ones of the key levers and when so operated effect insertion of a "3" code bit (energization of the punch magnet PM3) into the corresponding coded item of information so long as the keyboard mechanism is operated in the "lower case" mode which is indicated by the illumination of an indicating lamp L through normally closed contacts 7 and 8 of the microswitcch set 146. Upon transfer of the contacts of the microswitch set 146 by the "upper case" key lever, the slide member operated contacts SC2, SC3 and SC4 are no longer energized to insert a "3" code bit and a "6" code bit is inserted into each coded item of information by energization of the punch magnet PM6 through the normally closed slide member operated contacts SC5 and SC6 unless these latter contacts are operated by a slide member associated with either of two preselected key levers [as for example those operated by the function control bars 115 and 115' (FIG. 21)]. Operation of the microswitch set 146 to transfer its contacts effects closure of its normally open contacts 7 and 9 to illuminate a lamp L1 indicating operation of the keyboard mechanism in the "upper case" mode. The energization of the indicating lamps L and L1 is supplied through normally closed contacts 7 and 8 of the control microswitch set 146' from the associated equipment 169 as shown, so that operation of the control microswitch set 146' to transfer its contacts by the operation of the "control" key lever extinguishes the indicator lamps L and L1 and effects closure of the control microswitch set 146' contacts 7 and 9 to illuminate a further indicator lamp L2 while concurrently energizing the electromanget 108 to position the lockup vane 101 (FIGS. 3 and 19) and thus effect lockup of a preselected group of key levers as earlier described. In the control position of the control microswitch set 146', its contacts 1 and 2 open to deenergize the code selector contacts C6 and C7 and its contacts 4 and 6 close to select the code selector contacts C9 for generation of the parity check bit.

It will be evident from the foregoing description of the invention that a keyboard mechanism embodying the invention is one of compact and relatively simple construction exhibiting both smooth yet firm key manipulation and quiet operation and enabling a pleasingly low keyboard silhouette. The keyboard mechanism of the invention possesses high versatility in application and dependability in operation, and possesses the desirable advantage that it enables an easily and simply effected change in the coding of data information entered by the keyboard. Further, a keyboard mechanism embodying the invention possesses desirable anti-repeat and full and selective key interlock features of operation effected in a positive and dependable manner under all operational conditions.

While there have been described specific forms of the invention for purposes of illustration, it is contemplated that numerous changes may be made without departing from the spirit of the invention.

What is claimed is:

1. A keyboard mechanism, having a keyboard at the forward end thereof, comprises a plurality of slide members each having a rearwardly directed and sharply pointed nose providing a latch portion forming a rearwardly directed latch notch acutely angled with respect to the longitudinal axis of said each slide member, means supporting said slide members to enable longitudinal motion thereof and to allow pivtotal motion of at least said latch portion thereof, a plurality of manually operable key levers positioned in interleaved relation to said slide members and each supported for movement between non-operated and operated positions, a plurality of latch rollers each engageable by the pointed nose latch portion of an individual one of said members and positionable in the acutely angled latch notch formed thereby to latch each member in a latched position restrained against longitudinal movement thereof to an operated position, means providing bias forces urging said slide members when unlatched to move longitudinally to said operated position thereof and in said latched positions thereof to retain their rearwardly directed pointed nose latch portions biased into latchable engagement with individual ones of said latch rollers due to said acutely angled latch notch, means providing bias forces urging said key levers to said non-operated positions thereof, means operatively intercoupling each said key lever and an individual one of said slide members throughout an initial range of manually actuated movement of said individual key lever toward said operated position thereof for angularly moving the pointed nose of the latch portion of said each slide member an incremental displacement beyond the point of latchable engagement with the associated latch roller as established by the axis of rotation thereof and thereafter permit unrestrained longitudinal movement of the slide member to said operated position thereof, power operated means for longitudinally moving said slide members from their operated position to their latchable position, and means operated by each said slide member in the operated position thereof for effecting selection of an individual coded item of information corresponding to the individual key lever manually operated.

2. A keyboard mechanism in accordance with claim 1 in which each said slide member is supported for both longitudinal and pivotal motion and is guided to move in a plane parallel to the plane of motion of an individual adjacent one of said key levers.

3. A keyboard mechanism in accordance with claim 2 in which said slide members and key levers have elongated flat configurations and each slide member and an adjacent individual key lever are pivotally supported at a common end and in closely spaced side-by-side interleaved relation for edgewise angular movement.

4. A keyboard mechanism in accordance with claim 3 in which said slide members are supported at a common rear end region thereof by said slide supporting means and are urged by said bias means to move longitudinally toward said region thereof, and in which said slide member latch portion extends edgewise from the slide member and has a rearwardly directed hook-like configuration establishing a hooked latching engagement with an individual one of said rollers in the latched position of each said slide member.

5. A keyboard mechanism in accordance with claim 1 in which the latch portion of each said slide member includes a projecting nose having a rearwardly directed angled nose surface terminating in an acutely angled apex and adapted under the longitudinal bias force acting upon the slide member and by engagement of said nose portion with the peripheral surface of an associated latch roller to urge pivotal movement of said each slide member either to latched or unlatched relation with the latch roller in dependance upon the prevailing lateral displacement of the apex of said nose surface in relation to the axis of rotation of the associated latch roller.

6. A keyboard mechanism in accordance with claim 1 in which the latch portion of each said slide member has a sharply pointed nose configuration formed by the juncture of an acutely angled edge surface adapted for anti-friction latching and unlatching engagement with an individual one of said latch rollers during pivotal movement of said each slide member and a relatively flat edge surface portion adapted for anti-friction guiding engagement with said individual latch roller during longitudinal motion of said each slide member.

7. A keyboard mechanism in accordance with claim 1 in which said intercoupling means comprises a spring biased pawl pivotally supported on each key lever and movable therewith initially operatively to engage and pivotally to move the associated slide member to unlatched position and thereafter pivotally to move under spring bias to a position operatively disengaged from said associated slide member while the associated key lever re-

mains in operated position and until the associated key lever returns substantially to the non-operated position thereof.

8. A keyboard mechanism in accordance with claim 7 in which each said pawl is supported upon the associated key lever for both pivotal and longitudinal movement to permit by such longitudinal movement engagement therewith and longitudinal movement of the associated slide member to latchable position while the associated key lever remains in said operated position thereof.

9. A keyboard mechanism in accordance with claim 1 in which said intercoupling means comprises a pawl supported on each key lever for movement longitudinally thereof and spring bias means for urging the pawl to a longitudinal position on the key lever at which movement of the key lever toward its operated position operatively engages the pawl with an end portion of an associated slide member and pivotally moves the associated slide member to unlatched position.

10. A keyboard mechanism in accordance with claim 9 in which a slide member during power operated movement to the latchable position thereof is adapted to engage and longitudinally to move the associated pawl to permit return of the slide member to said latchable position thereof while preventing reestablishment of said operative engagement until the associated key lever has returned substantially to non-operated position.

11. A keyboard mechanism in accordance with claim 1 in which said power operated means includes a pivotally supported and power-actuated bail and each said slide member has a restore slide portion providing an angled edge cam surface engaged by said bail to exert on said each slide member a force effective to move said each slide member both longitudinally and pivotally to its latchable position with an individual one of said latch rollers.

12. A keyboard mechanism in accordance with claim 11 in which the latch portion of each slide member includes a projecting nose having an angled nose surface adapted under the longitudinal bias force acting upon the slide member and by engagement of the nose with the peripheral surface of an associated latch roller to urge pivotal movement of the slide member into said latched portion thereof and thereby disengage said restore slide portion and said bail.

13. A keyboard mechanism in accordance with claim 11 in which said bail upon moving to a reset position at which an operated slide member is returned to its latchable position cooperates with said restore slide portions of said slide members to restrain pivotal movement of any thereof to a position at which the latch portion thereof moves to unlatching engagement with its associated latch roller.

14. A keyboard mechanism in accordance with claim 13 in which said power operated means includes spring means for exerting on said bail a bias force urging said bail to move to said reset position thereof and additionally includes electrical means having an electrically energizable normal state effective to operate said bail to a reset position displaced from operative engagement with said restore slide portions of said slide members and having an electrically deenergized state permitting said spring means to move said bail to said reset position thereof.

15. A keyboard mechanism in accordance with claim 1 which includes an electrical switch controlled by an actuator member movable between a switch controlling non-actuated position and a switch controlling actuated position, a latch member for latching said actuator member in the actuated position thereof, means responsive to movement of a first preselected key lever to the operated position thereof for moving said actuator member to the actuated and latched position thereof, and means responsive to movement of a second preselected key lever to the operated position for unlatching said actuator member to said non-actuated position thereof.

16. A keyboard mechanism in accordance with claim 15 which includes a group-selective key lever mechanical lock member for locking selective key levers against manual actuation and means controlled by said electrical switch according to said actuated and non-actuated positions of said actuator member for respectively positioning said lock member in a mechanical locking relation to said key levers and withdrawing said lock member from locking relation therewith.

17. A keyboard mechanism in accordance with claim 1 in which said slide members each have an interlock portion, and in which there is provided means operated by said interlock portion of any slide member having its latch portion moved to latch disengageable position with an associated latch roller for restraining the latch portion of any other slide member for moving to its latch disengageable position.

18. A keyboard mechanism in accordance with claim 2 wherein said slide members are each of elongated flat configuration having said latch portion at one end thereof and having an elongated aperture and a laterally extending portion at the other end thereof, wherein said slide support means includes a plurality of slotted members positioned transversely of said slide members near the ends thereof to provide guide slots for guiding the slide members during edgewise and longitudinal movement thereof and includes a removable transverse retaining rod member normally extending through the elongated apertures of all of said slide members, and wherein said slide member biasing means is comprised by a plurality of spring fingers positioned in abutting relation to individual ones of said laterally extending portions of said slide members, whereby removal of said retaining rod member from said slide apertures permits ready longitudinal withdrawal of any slide members from said keyboard mechanism and ready longitudinal insertion of a replacement slide member into said keyboard mechanism.

References Cited

UNITED STATES PATENTS

62,637	3/1867	Kellogg	292—341.11 X
201,572	3/1878	Taylor	292—341.11
2,978,086	4/1961	Hickerson	197—16
3,014,569	12/1961	Palmer	197—16
3,086,635	4/1963	Palmer	197—107 X
3,115,963	12/1963	Harbor et al.	197—140 X
3,129,800	4/1964	Bogeaus	197—6.7
3,135,371	6/1964	Young	197—16
3,152,759	10/1964	May	197—98 X
3,189,153	6/1965	Barnard	197—98
3,191,740	6/1965	Smusz et al.	197—16
3,239,049	3/1966	Voit	197—16

WILLIAM B. PENN, *Primary Examiner.*

ROBERT E. PULFREY, *Examiner.*

E. S. BURR, *Assistant Examiner.*