May 13, 1947. W. G. McCONNEL 2,420,605

FREQUENCY MODULATED ROTATING RADIO BEACON

Filed July 16, 1942 2 Sheets-Sheet 1

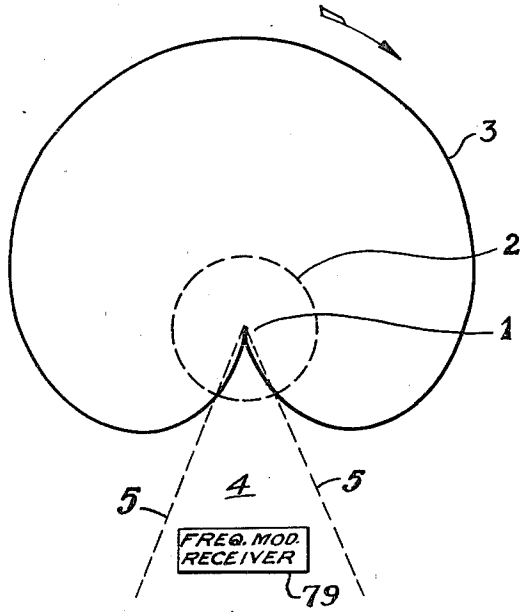

Fig. 1

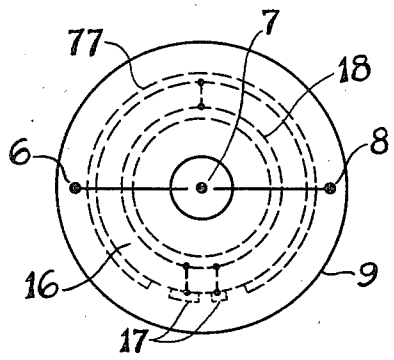

Fig. 3

INVENTOR
WILLIAM G. Mc CONNEL
BY Joseph Q. Stansfield
ATTORNEY

May 13, 1947. W. G. McCONNEL 2,420,605

FREQUENCY MODULATED ROTATING RADIO BEACON

Filed July 16, 1942 2 Sheets-Sheet 2

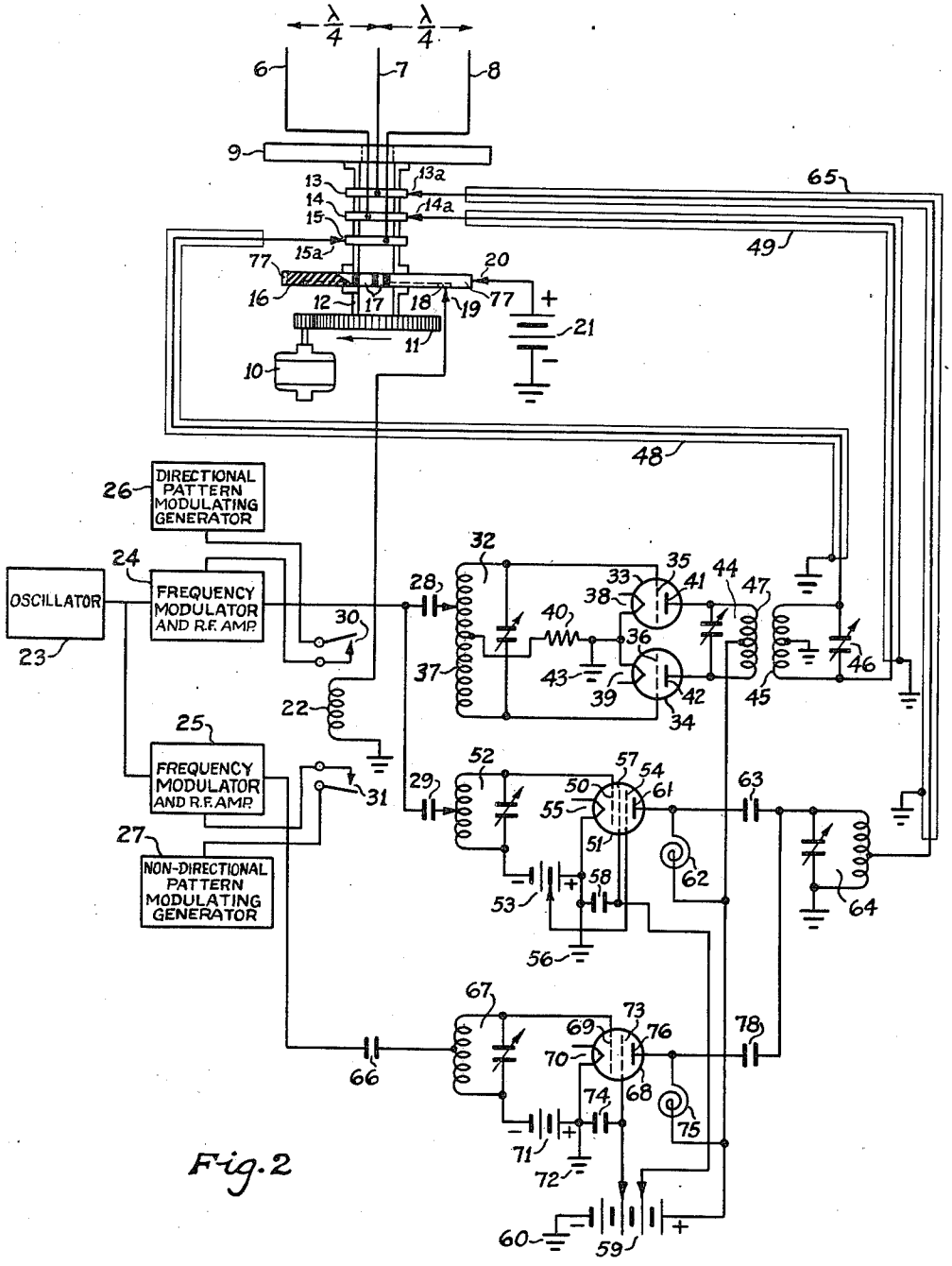

Fig. 2

INVENTOR
WILLIAM G. McCONNEL
BY Joseph Q. Stansfield
ATTORNEY

Patented May 13, 1947

2,420,605

UNITED STATES PATENT OFFICE

2,420,605

FREQUENCY MODULATED ROTATING RADIO BEACON

William G. McConnel, Baltimore, Md., assignor to Bendix Aviation Corporation, South Bend, Ind., a corporation of Delaware

Application July 16, 1942, Serial No. 451,136

14 Claims. (Cl. 250—11)

1

This invention relates to radio beacons, and more particularly to a rotating radio beacon employing frequency modulated emission.

The interference free quality of transmission obtainable by the use of wide band frequency modulated transmission systems is well known. When a receiver equipped with the proper limiters is employed, communication may be carried on at times when the intelligibility of an amplitude modulated communication circuit is seriously impaired by electrical disturbances. Using a frequency modulation receiver of the type mentioned, it is found that a signal preponderance of 2:1 of one transmission over another is enough to insure solid reception of the stronger transmission without interference from the weaker. This ability to completely separate transmissions on the basis of an amplitude differential, though the nominal carrier frequencies may be identical, is employed in the invention to provide a rotating radio beacon realizing the immunity to impulse interference which characterises frequency modulation and to permit the relatively close geographic spacing of beacons of this type.

One of the principal objects of the invention is to provide a new and novel rotating radio beacon having greater reliability and improved operating characteristics.

Another object of the invention is to provide a new and novel rotating radio beacon which is less subject to impulse interference.

Still another object of the invention is to provide a rotating radio beacon in which the interference zone between adjacent beacons operating on the same frequency is much smaller in area than in present rotating radio beacon systems.

Yet another object of the invention is to provide a rotating radio beacon requiring a minimum of equipment at the receiving location.

The above objects and advantages of the invention are accomplished by non-directionally radiating a signal frequency modulated with an identifying characteristic, directionally radiating a signal frequency modulated with a different identifying characteristic, the second signal having substantially the same mean carrier frequency as the first mentioned signal, and causing the directionally radiated pattern to rotate at a uniform rate in a selected direction. At a predetermined point in the rotation, the transmission is momentarily modified to provide a reference point. The resultant space signal is received on a frequency modulation receiver incorporating limiter circuits and the observer's position may

2

be determined by observation of the receiver output and the use of a stop watch, or the equivalent thereof.

Other objects and advantages of the invention will in part be disclosed and in part be obvious when the following specification is read in conjunction with the drawings in which:

Figure 1 is a diagram of the space transmission patterns employed.

Figure 2 is a schematic diagram of apparatus providing the space transmission patterns of Figure 1.

Figure 3 is a top view of the antennas and table showing in more detail the conductive sectors of the keying disc underlying the table as shown in Figure 2.

It is to be understood that these drawings are intended to illustrate one of the many forms in which the invention may be utilized and are not to comprise a limitation in the content or scope of the invention.

Referring to Figure 1, the location of the beacon is indicated at 1. The transmitter radiates two differently modulated frequency modulated signals having the same mean carrier frequency. For the purposes of explanation, let one signal be modulated at 500 cycles and radiated non-directionally as indicated by the polar pattern 2, while the other signal is modulated at 1200 cycles and is radiated directionally with a maximum amplitude greater than that of the non-directional radiation as indicated by the polar pattern 3. The cardioid shaped pattern 3 is caused to rotate clockwise at the uniform rate of one revolution per minute and as the null of the cardioid pattern passes through north at the transmitter location, the modulation of both signals is keyed with the code character N, the dot of the N ending just as the cardioid null is at true north. This completes the outline of the transmission characteristics.

A frequency modulation receiver 79 is situated in the space field at 4 and reacts in the following manner to the signals impressed thereon. As the radiation maximum of the cardioid 3 sweeps past the receiver, the signal bearing the 1200 cycle modulation controls the receiver limiter and only the 1200 cycle note is heard by the observer. Upon the continuing rotation of the cardioid pattern, the signal strength of the 1200 cycle modulated signal becomes progressively less and less, until, when the cardioid null lies within a few degrees of the direction of the receiver from the beacon location, the non-directionally radiated 500 cycle modulated signal is stronger

than the 1200 cycle signal. The non-directional signal now takes over control of the receiver limiter and only the 500 cycle note is heard by the observer. As outlined above, the modulation on both signals is keyed with the code character N as the cardioid null passes through north, the dot of the N ending just as the null lies at truth north. With this reference point, the observer's bearing from the radio beacon transmitter is readily obtained by starting a stop watch at the end of the character N and stopping the watch when the tone change denoting the passage of the cardioid null past the observer is heard. The dotted lines 5 indicate the limits of this region, whose angular width is dependent on the ratio of the maximum directionally radiated signal to the non-directionally radiated signal. The true bearing is obtained by multiplying the stop watch indication in seconds by 6, the number thus obtained being the desired bearing.

The apparatus of Figure 2 shows one of the many possible systems for producing the space field patterns described above. The antennas 6, 7, and 8 are mounted at intervals of one-quarter wavelength of the mean carrier frequency on an artificial ground plane comprising the rotatable table 9 which is rotated clockwise by the motor 10 acting on the drive gear 11 attached to the shaft 12 which may be of insulating material. The shaft 12 is provided with the slip rings 13, 14, and 15 having the corresponding cooperating brushes 13*a*, 14*a*, and 15*a*. Slip ring 13 is connected to the central antenna 7, while slip rings 14 and 15 are connected to antennas 6 and 8 respectively. Also affixed to the shaft 12 is the keying disc 16 provided with the conducting sectors 17, 77 and the annular contact ring 18. The brush 19 makes continuous contact with the ring 18, while the brush 20 makes intermittent contact with the conducting sectors 17 and 77 which are electrically connected to the conducting ring 18 and are located on the periphery of the disc 16. When the brush 20 is in contact with one of the sectors 17 or 77, current flows from the positive terminal of the battery 21, through brush 20, sector 17 or 77, ring 18 and brush 19 to the operating winding of the keying relay 22 and the relay contacts 30, 31 are closed. The relative positioning of the conducting ring and sectors may be more clearly seen in Figure 3.

As the disc 16 rotates in unison with the antenna table 9, contacts 30, 31 remain closed during most of the revolution while sector 77 and brush 20 remain in contact. At a predetermined point in the revolution, however, contact between brush 20 and sector 77 is interrupted, opening the relay contacts, and upon the continuation of rotation, the sectors 17 and the brush 20 cooperate to open and close the relay contacts in a manner forming the code character N. Thereafter, contact between sector 77 and brush 20 is reestablished and the cycle begins to repeat itself.

In the apparatus generating the radio frequency energy necessary to energize the antenna array of Figure 2, there is situated the oscillator 23 whose output is fed into the frequency modulators and radio frequency amplifiers 24 and 25. If desired, two oscillators having somewhat different output frequencies may be employed to excite the two frequency modulators. The modulators and amplifiers 24 and 25 may be of the type wherein frequency modulation is produced by modulating the carrier energy, combining the modulated energy with the carrier energy in phase quadrature, thus producing phase modulation, and then multiplying the frequency of the phase modulated signal, converting it to a frequency modulated signal having the desired mean carrier frequency and degree of frequency modulation. The generator 26 supplies the energy controlling modulator 24 in series with the contacts 30 of the relay 22, and the generator 27 supplies the energy controlling modulator 25 in series with the contacts 31 of the relay 22. The output of modulator 24 is impressed on the tuned circuit 32 situated in the grid circuits of the amplifying tubes 33, 34 through the condenser 28. The control grids 35, 36 are connected to opposite ends of the tuned circuit 32 and the center tap of the inductance 37 of circuit 32 is connected to the filaments 38, 39 through the resistor 40 which supplies negative bias for the grids 35, 36 by virtue of the grid current flowing therethrough in the presence of radio frequency grid excitation. The filament circuit is grounded at 43. The anodes 41, 42 are connected to opposite ends of the tuned circuit 44 including the center tapped inductor 47. Coupled to inductor 47 is the winding 45, which is grounded at its center tap, and this winding is tuned by the variable capacitor 46. The shielded concentric lines 48, 49 are connected to opposite ends of the inductor 45, these lines serving to convey the radio frequency energy from the output of the amplifier described to the antennas 6 and 8 via the brushes 15*a*, 14*a* and the slip rings and circuit connections on the rotating antenna mount.

The output of modulator 24 is also impressed on the control grid 50 of the amplifier tube 51 via the condenser 29 and the tuned circuit 52 having one terminal connected to the grid 50 and the other terminal connected to the negative terminal of the bias source 53. The suppressor grid 54 of the tube 51 is connected to an intermediate point on the source 53, and the positive terminal of source 53 is connected to one side of the filament 55 which is grounded at 56. The screen grid 57 is maintained at positive potential by the connection to an intermediate positive point on the direct current power supply 59 having the negative terminal connected to ground at 60. Radio frequency potentials on the screen grid 57 are eliminated by the condenser 58 connected between this grid and the filament 55. The anode 61 of tube 51 is connected to the positive terminal of source 59 through the anode circuit choke 62, and the radio frequency potentials developed across the choke 62 are impressed on the output circuit 64 via the condenser 63. The other end of the output circuit 64 is grounded and the shielded concentric transmission line 65 is connected to an intermediate point on the output circuit for impedance matching purposes.

The output of modulator 25 passes through the condenser 66 to the tuned circuit 67 in the control grid circuit of the amplifier 68, one terminal of the tuned circuit being connected to the control grid 69 while the other terminal is connected to the filament 70 through the bias source 71, the positive terminal of source 71 being connected to the filament 70 and grounded at 72. The screen grid 73 is energized by connection to an intermediate point on the source 59 and radio frequency potentials on the screen grid 73 are eliminated by the bypass capacitor 74 connected between this point and the filament 70. The anode current flows from the positive terminal of source 59 through the anode circuit

choke 75 to the anode 76 and radio frequency potentials developed across this choke pass through the blocking condenser 78 and are also impressed on the output circuit 64. The transmission line 65 thus conveys the output energies of both amplifiers 51 and 68 to the central antenna 7 on the rotating antenna mount. For purposes of insuring correct phasing of the output of amplifier 51, it may be desirable that the length of transmission line 65 differ by one quarter wavelength or some odd multiple thereof from the length of the lines 48 and 49.

As is well known in the art, two antennas spaced by one-half wavelength and excited in opposite phase provide a figure-of-eight shaped space radiation pattern, and when this pattern is additionally modified by an antenna centrally spaced therebetween and excited in phase quadrature this pattern is altered to form a cardioid. The amplifiers 33 and 34 excite antennas 6 and 8 in counterphase while the output of amplifier 51 excites the central antenna 7 with the same signal in quadrature phase relationship due to the additional length of transmission line 65 thus providing a cardioid shaped space pattern of radiation. Rotation of the table 9 by the motor 10 causes this pattern to rotate in space as described in the discussion of Figure 1. The output of modulator 24 is modulated by the output of the generator 26 which may have a frequency of 1200 cycles per second and the cardioid pattern of radiation is therefore identified by this frequency.

Also impressed in the central antenna 7 is the output of the amplifier 68 which energy appears only on the central antenna and is therefore non-directionally radiated. This energy is frequency modulated by the energy derived from the generator 27 which may have a frequency of 500 cycles per second and the non-directional pattern of radiation is therefore identified by this frequency. During the rotation of the antenna system, the segments 17 of the disc 16 pass under the brush 20, operating the relay 22 and keying the output of both modulation generators 26 and 27, through the action of the contacts 30 and 31, to form the code character N. As indicated previously, the brush 20 is so located that the dot of the N ends as the null of the cardioid radiation pattern passes through true north. Interpretation of the received signal takes place at the receiving location as outlined in the discussion of Figure 1.

Vacuum tubes 33 and 34 may be of the triode type as indicated, while vacuum tubes 51 and 68 are preferably of the pentode or tetrode type to afford greater freedom from interaction due to the common anode load circuit. It is desirable that the output of neither of the latter two tubes be limited by the amplitude of the plate voltage excursions in order that there will be as little interference as possible between the directional and non-directional radiation.

The top view of the rotating antenna mount 9 in Figure 3 gives additional details of the position of the antennas, 6, 7, and 8 and also shows in dotted lines the disc 16 with the annular conducting ring 18 connected to the conducting segments 17 and the conducting ring 77.

A mechanically rotated antenna system has been shown as the most simple system for obtaining the desired radiation patterns, and it is quite practical at frequencies of the order of 100 megacycles as the required diameter of the rotating table is only 1½ meters or 4½ feet. The

rotation speed may, of course, be altered to suit the requirements of individual installations. If it is desired to radiate the rotating patterns as described with a stationary antenna system, this may be accomplished by employing two pairs of spaced antennas in space quadrature, exciting opposite antennas of a given pair with oppositely phased carrier currents while corresponding antennas in the two systems are excited in phase, and modulating the carrier energy fed to the two pairs in phase quadrature at the desired frequency of cardioid pattern rotation. As in the system previously described, a central antenna excited in quadrature at the carrier frequency is centrally located in the alternative. Any system providing the necessary rotating pattern may be used in the practice of the invention and it is not necessary that the directional transmission pattern be exactly cardioid in shape. It is, however, desirable that the directional pattern have but one null and that that null occupy a relatively small angular sector.

For purposes of simplification, the filament or heater circuits for the electron emitters of the vacuum tubes have been omitted in the diagram as such circuits are well known in the art.

It will be obvious that many changes and modifications may be made in the invention without departing from the spirit thereof as expressed in the foregoing description and in the appended claims.

What I claim is:

1. In a radio beacon, means for producing a non-directional space radiation pattern of periodic energy frequency modulated with a predetermined characteristic, means for producing a directional space radiation pattern of periodic energy frequency modulated with a second predetermined characteristic, and means for rotating said directional pattern in space.

2. In a radio beacon, means for producing a non-directional space radiation pattern of periodic energy frequency modulated with a predetermined characteristic, means for producing a directional space radiation pattern of periodic energy frequency modulated with a second predetermined characteristic, means for rotating said directional pattern in space, and means operative to vary the energy of said radiation patterns for identifying the moment of passage of a predetermined point of said directional pattern through a selected azimuthal direction.

3. In a radio beacon, means for producing a non-directional space radiation pattern of periodic energy frequency modulated with a predetermined characteristic, means for producing a directional space radiation pattern of periodic energy frequency modulated with a second predetermined characteristic and having a single radiation minimum, means for rotating said directional pattern in space, and means operative to vary the energy of said radiation patterns for identifying the moment of passage of a predetermined point of said directional pattern through a selected azimuthal direction.

4. In a radio beacon system, means for producing a stationary space radiation pattern of periodic energy frequency modulated with a predetermined characteristic, means for producing a directional space radiation pattern of periodic energy frequency modulated with a second predetermined characteristic, means for rotating said directional pattern in space and means operative to vary the energy of said radiation patterns for identifying the moment of passage of

a predetermined point of said directional pattern through a selected azimuthal direction.

5. In a radio beacon system, means for producing a non-directional space radiation pattern of periodic energy frequency modulated with a predetermined frequency, means for producing a directional space radiation pattern of periodic energy frequency modulated with a second predetermined frequency, means for rotating said directional pattern in space, means operative to vary the energy of said radiation patterns for identifying the moment of passage of a predetermined point of said directional pattern through a selected azimuthal direction, and receiving means responsive to the energy in said patterns providing output impulses at the moment of said identification and at the moment of passage of said predetermined point of said directional pattern across a line joining the center of rotation of said directional pattern and the receiving location, whereby the azimuthal location of said receiving means with respect to said center of rotation may be determined by measurement of the time interval between said impulses.

6. In a radio beacon system, means for producing a non-directional space radiation pattern of periodic energy frequency modulated with a predetermined frequency, means for producing a directional space radiation pattern of periodic energy frequency modulated with a second predetermined frequency, means for rotating said directional pattern in space about a center substantially coincident with the center of said non-directional space radiation pattern, means operative to vary the energy of said radiation patterns for identifying the moment of passage of a predetermined point of said directional pattern through a selected azimuthal direction, and receiving means responsive to the energy in said patterns and providing output impulses at the moment of said identification and at the moment of passage of said predetermined point of said directional pattern across a line joining the center of rotation of said directional pattern and the receiving location, whereby the azimuthal location of said receiving means with respect to said center of rotation may be determined by measurement of the time interval between said impulses.

7. In a radio beacon system, means for producing a non-directional space radiation pattern of periodic energy frequency modulated with a predetermined frequency, means for producing a directional space radiation pattern of periodic energy frequency modulated with a second predetermined frequency and having a single radiation minimum, means for rotating said directional pattern in space about a center substantially coincident with the center of said non-directional space radiation pattern, means operative to vary the energy of said radiation patterns for identifying the moment of passage of said radiation minimum through a selected azimuthal direction, and receiving means responsive to the energy in said patterns and providing output impulses at the moment of said identification and at the moment of passage of said radiation minimum across a line joining the center of rotation of said directional pattern and the receiving location, whereby the azimuthal location of said receiving means with respect to said center of rotation may be determined by measurement of the time interval between said impulses.

8. In a radio beacon, a source of periodic energy of substantially constant frequency, means for frequency modulating energy from said source at a predetermined frequency, means for frequency modulating energy from said source at a second predetermined frequency, an antenna system including three substantially coplanar spaced antennas, means for impressing said first mentioned modulation on the end antennas of said antenna system in out of phase relationship, means for impressing said first mentioned modulation on the central antenna of said antenna system in quadrature with the voltages on said end antennas, means for impressing said second mentioned modulation on said central antenna, and means for rotating said antenna system at a uniform rate.

9. In a radio beacon, a source of periodic energy of substantially constant frequency, means for frequency modulating energy from said source at a predetermined frequency, means for frequency modulating energy from said source at a second predetermined frequency, an antenna system including three substantially coplanar spaced antennas, means for impressing said first mentioned modulation on the end antennas of said antenna system in out of phase relationship, means for impressing said first mentioned modulation on the central antenna in quadrature with the voltages on said end antennas, means for impressing said second mentioned modulation on said central antenna, means for rotating said antenna system at a uniform rate, and means for interrupting both of said frequency modulations at a predetermined point in the rotation of said antenna system.

10. In a radio beacon, a source of periodic energy of substantially constant frequency, two frequency modulators connected to the output of said source, a source of alternating current having a predetermined frequency, a source of alternating current having a second predetermined frequency, relay means for intermittently connecting one of said alternating current sources to one of said frequency modulators and the other of said alternating current sources to the other of said frequency modulators, an antenna system comprising three substantially coplanar spaced antennas, means for impressing the output of one of said modulators on the end antennas of said antenna system in out of phase relationship, means for impressing the output of said one of said modulators on the central antenna of said system in quadrature with the voltages on said end antennas, means for impressing the output of the other of said modulators on said central antenna, means for rotating said antenna system at a uniform rate, and means operative upon the rotation of said antenna system for controlling the operation of said relay means.

11. In a radio beacon, a source of periodic energy of substantially constant frequency, two frequency modulators connected to the output of said source, a source of alternating current having a predetermined frequency, a source of alternating current having a second predetermined frequency, relay means for intermittently connecting one of said alternating current sources to one of said frequency modulators and the other of said alternating current sources to the other of said frequency modulators, an antenna system comprising three substantially parallel antennas spaced by approximately one quarter wavelength at the mean radiated frequency, means for impressing the output of one of said modulators on the end antennas of said antenna system in opposite phase relationship, means for

impressing the output of said one of said modulators on the central antenna of said system in quadrature with the voltages on said end antennas, means for impressing the output of the other of said modulators on said central antenna, means for rotating said antenna system at a uniform rate, and means operative upon the rotation of said antenna system for controlling the operation of said relay means.

12. In a radio beacon, a source of periodic energy of substantially constant frequency, two frequency modulators connected to the output of said source, a source of alternating current having a predetermined frequency, a source of alternating current having a second predetermined frequency, relay means for intermittently connecting one of said alternating current sources to one of said frequency modulators and the other of said alternating current sources to the other of said frequency modulators, an antenna system comprising three substantially parallel antennas spaced by approximately one quarter wavelength at the mean radiated frequency, an amplifier having an output circuit symmetrical with respect to ground, means connecting the input of said amplifier to the output of one of said frequency modulators, connecting lines of equal length connecting symmetrical points on said output circuit to the end antennas of said antenna system, means for impressing the output of said one of said frequency modulators on the central antenna of said system in quadrature with the voltages on said end antennas, means for impressing the output of the other of said modulators on said central antenna, means for rotating said antenna system at a uniform rate, and means operative upon the rotation of said antenna system for controlling the operation of said relay means.

13. In a radio beacon, a source of periodic energy of substantially constant frequency, two frequency modulators connected to the output of said source, a source of alternating current having a predetermined frequency, a source of alternating current having a second predetermined frequency, relay means for intermittently connecting one of said alternating current sources to one of said frequency modulators and the other of said alternating current sources to the other of said frequency modulators, an antenna system comprising three substantially parallel antennas spaced by approximately one quarter wavelength at the mean radiated frequency, an amplifier having an output circuit symmetrical with respect to ground, means connecting the input of said amplifier to the output of one of said frequency modulators, connecting lines of equal length connecting symmetrical points on said output circuit to the end antennas of said antenna system, a second amplifier connected to the output of said one of said frequency modulators, a connecting line differing in length by an odd number of quarter wavelengths at the mean radiated frequency from the length of said connecting lines connected between the output of said second amplifier and the central antenna of said system, means for impressing the output of the other of said modulators on said central antenna, means for rotating said antenna system at a uniform rate, and means operative upon the rotation of said antenna system for controlling the operation of said relay means.

14. In a radio beacon, a source of periodic energy of substantially constant frequency, two frequency modulators connected to the output of said source, a source of alternating current having a predetermined frequency, a source of alternating current having a second predetermined frequency, relay means for intermittently connecting one of said alternating current sources to one of said frequency modulators and the other of said alternating current sources to the other of said frequency modulators, an antenna system comprising three substantially parallel antennas spaced by approximately one quarter wavelength at the mean radiated frequency, an amplifier having an output circuit symmetrical with respect to ground, means connecting the input of said amplifier to the output of one of said frequency modulators, connecting lines of equal length connecting symmetrical points on said output circuit to the end antennas of said antenna system, a tuned impedance matching circuit connected to the central antenna of said antenna system by a connecting line differing from the length of said connecting lines by an odd number of quarter wavelengths at the mean radiated frequency, an amplifier connected between the output of said one of said frequency modulators and said impedance matching circuit, an amplifier connected between the output of the other of said frequency modulators and said impedance matching circuit, means for rotating said antenna system at a uniform rate, and means operative upon the rotation of said antenna system for controlling the operation of said relay means.

WILLIAM G. McCONNEL.

REFERENCES CITED

The following references are of record in the file of this patent:

UNITED STATES PATENTS

Number	Name	Date
2,014,732	Hansell	Sept. 17, 1935
2,184,843	Kramar	Dec. 26, 1939