No. 626,300. Patented June 6, 1899.

A. W. ROGERS & S. W. WINSLOW.

METHOD OF MAKING ABRASIVE PAD COVERS FOR BUFFING MACHINES.

(Application filed Apr. 18, 1898.)

(No Model.)

Fig. 1.

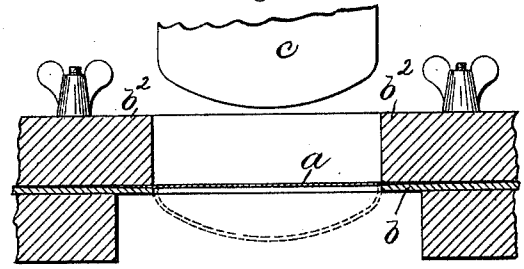

Fig. 2.

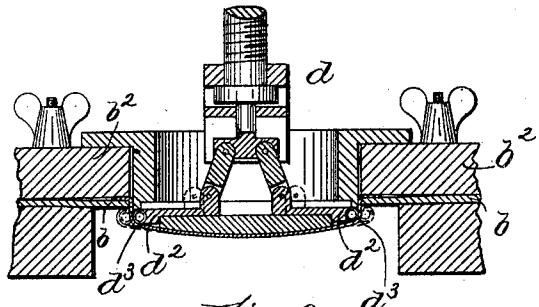

Fig. 3.

Fig. 4.

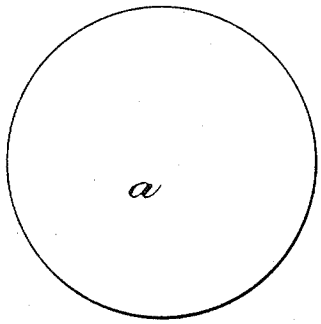

Fig. 5.



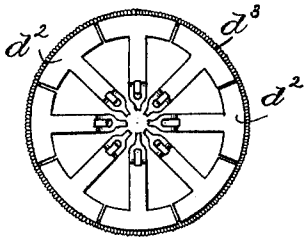

Fig. 8.

Fig. 6.

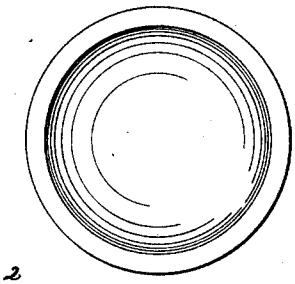

Fig. 7.



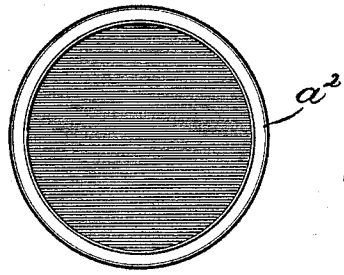

Fig. 9.



Witnesses
Jas. J. Maloney.
M. C. Hill.

Inventors
Andrew W. Rogers
and Sidney W. Winslow.
by Jno. P. Livermore
Atty.

THE NORRIS PETERS CO., PHOTO-LITHO., WASHINGTON, D. C.

UNITED STATES PATENT OFFICE.

ANDREW W. ROGERS AND SIDNEY W. WINSLOW, OF BEVERLY, MASSACHUSETTS, ASSIGNORS TO SIDNEY W. WINSLOW, TRUSTEE, OF SAME PLACE.

METHOD OF MAKING ABRASIVE PAD-COVERS FOR BUFFING-MACHINES.

SPECIFICATION forming part of Letters Patent No. 626,300, dated June 6, 1899.

Application filed April 18, 1893. Serial No. 470,921. (No model.)

To all whom it may concern:

Be it known that we, ANDREW W. ROGERS and SIDNEY W. WINSLOW, of Beverly, county of Essex, State of Massachusetts, have invented an Improvement in Methods of Making Abrasive Pad-Covers for Buffing-Machines, of which the following description, in connection with the accompanying drawings, is a specification, like letters on the drawings representing like parts.

Our invention relates to a method of making abrasive covers for pads of buffing-machines for buffing the soles of boots and shoes—such, for example, as shown in Letters Patent to Winslow and Fifield, No. 221,647, dated November 11, 1879.

The present invention consists of a method of making abrasive covers of the kind shown and described in an application of A. W. Rogers, one of the joint inventors of the present invention, said pad-cover having a circular working face and an inturned marginal portion overlying a portion of the pad or foot on which the abrasive cover is used in the machine and said cover being molded so that the angle or fold between the working face and overlying portion is properly curved to correspond with the shape of the pad or foot. In order to produce such a pad-cover in accordance with the present invention, a flat blank or piece of suitable material, preferably the emery-cloth of commerce, is yieldingly secured around its marginal portion, as by being fastened between clamps, and the middle unclamped portion is then subjected to lateral pressure, which stretches and bulges the material and at the same time causes the marginal clamped portion to slip between the clamps and to contract or draw in toward the center of the blank, which at the end of this operation is of smaller size at its periphery than the original blank, but is stretched laterally, so as to provide fullness within the contracted periphery. The stretched or fulled portion is then expanded laterally with relation to the periphery, so that the material within the clamped periphery becomes expanded to a larger diameter than the clamped periphery, thus bringing the cover to the desired shape. The stretching and expanding may be performed as two consecutive operations or may be performed simultaneously, or substantially so, the result being that a flat blank has its marginal portion contracted and the portion within the margin expanded and folded as required.

Figure 1 is a sectional view illustrating the first portion of the process; Fig. 2, a sectional view illustrating the final portion of the process; Fig. 3, a plan view of a die or former that may be employed to expand and fold the stretched material; Figs. 4 and 5, a plan view and transverse section of the original blank; Figs. 6 and 7, similar views of the same blank with its margin contracted and the portion within the margin stretched to produce the necessary fullness, and Figs. 8 and 9 similar views of the completed article.

In order to produce a molded abrasive cover for a buffing-machine in accordance with this invention, a blank *a*, Figs. 4 and 5, of a proper size and shape and suitably tempered or softened by moisture, is taken and its marginal portions are then secured between the clamp members b b^2, (see Fig. 1,) which are shown as in the form of flat plates having a circular opening of a size less than that of the working face of the finished pad-cover, said plates being pressed by any suitable means against the margin of the blank between them, so as to hold the same firmly, but not so firmly as to prevent the material of the blank from slipping between them when acted upon by a considerable strain, not, however, enough to endanger the breaking or tearing of the material. The said blank, with its marginal portion thus yieldingly clamped, then has its middle portion pressed in the direction transverse to its plane, preferably by a convex-ended plunger *c*, which thus stretches the portion of the material within the opening of the clamp-plates and at the same time draws the clamped marginal portion inward toward the center, and thus contracts the margin while stretching the middle portion, so that the blank is brought to the condition shown in Figs. 6 and 7. The stretching should not be sufficient to wholly pull the marginal portion from between the clamping-plates, and while the marginal portion, contracted as has been described, is

still held or clamped the stretched intermediate portion is expanded to a greater size than the opening in the clamp-plates, as shown in dotted lines, Fig. 2, thus taking up the fullness of the middle part of the blank and producing a fold at the periphery of the expanded portion, as shown at a^2 in Figs. 8 and 9. It is not essential that the marginal portion should yield during such expansion of the stretched portion if sufficient fullness has been already provided; but the expanding operation may take place while the margin is contracting, and the complete expansion may be sufficient to draw the margin out from the clamps by the time that the blank is brought to the desired shape for the working pad-cover. Any suitable former or die capable of expanding circumferentially may be employed for thus expanding and folding the material—as, for example, a former d, Fig. 2, having a number of radially-movable segments d^2, (see Fig. 3,) capable of being moved outward or inward simultaneously. The former is shown as provided with a flexible band d^3, passed around the ends of the said movable segments d^2 to cover the spaces between them as they expand; but the said band may be omitted and the said expanded former may be given a rotary movement while or after expanding, so as to act upon all parts of the fold in the material being molded or formed.

It is obvious that the same device might be employed both to produce the lateral stretching of the blank and the expansion and folding and that these operations may be performed simultaneously by an expanding-former, such as shown in Figs. 2 and 3; but it is believed that the best results are attained by first stretching and subsequently expanding, as has been heretofore described.

The blank may be of any desired shape, and when the inwardly-folded or overlying part is to form a complete annular flange, as shown in Figs. 8 and 9, a circular blank, such as shown in Fig. 4, will be used; but it is obvious that blanks of other shape may be employed, in which case the overlying or attaching part may be varied in shape from a complete annular flange; but in all cases the fold or junction between the working face and the overlying part will be molded to the proper curvature by the herein-described process.

We claim—

That improvement in the art or method of making abrasive covers for buffing-machine pads which consists in yieldingly holding the marginal portion of a flat blank and applying pressure to the middle portion thereof in a direction transverse to its plane whereby said middle portion is stretched and the marginal portion contracted; and then applying expansive pressure in said stretched middle portion whereby it is re-formed, being expanded to a greater diameter than the inner edge of the restrained and contracted margin substantially as and for the purpose described.

In testimony whereof we have signed our names to this specification in the presence of two subscribing witnesses.

ANDREW W. ROGERS.
SIDNEY W. WINSLOW.

Witnesses:
JOS. P. LIVERMORE,
JAS J. MALONEY.