United States Patent

[11] 3,589,572

[72] Inventor **Charles Hannon**
250 Garth Road, Scarsdale, N.Y. 10583

[21] Appl. No. **759,678**
[22] Filed **Sept. 13, 1968**
[45] Patented **June 29, 1971**

[54] **DISPENSING CONTAINER WITH CLOSURES**
2 Claims, 7 Drawing Figs.

[52] **U.S. Cl.** **222/480**
[51] **Int. Cl.** **B67d 3/00**
[50] **Field of Search** 222/485, 486, 480, 487, 484, 482, 543, 538

[56] **References Cited**

UNITED STATES PATENTS

3,169,679	2/1965	Hunter	222/484
3,262,606	7/1966	Waterman	222/480 X
3,362,591	1/1968	Latham et al.	222/484 X

Primary Examiner—Stanley H. Tollberg
Attorney—Donald P. Gillette

ABSTRACT: A dispensing container for condiments such as salt, pepper and the like, having a detachable cover. The cover is formed for a forced fit over two separated portions in a wall of the container, one portion carrying an array of shaker holes and the other portion provided with a spoon size hole. The cover is provided with a flexible link or hinge connecting two flaps each of which covers one of the apertured portions. The cover is arranged so that either of the apertured portions can be uncovered while the other apertured portion remains covered.

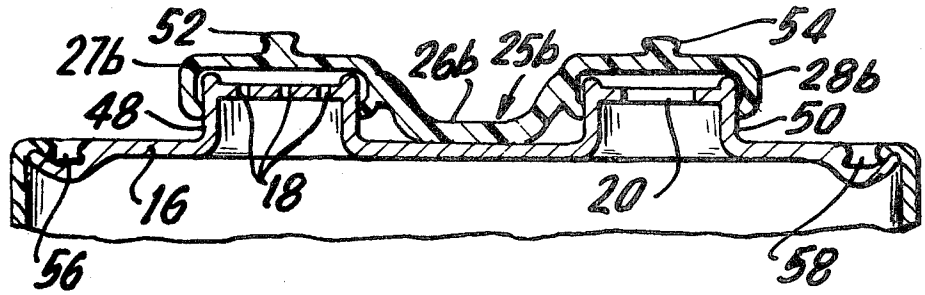

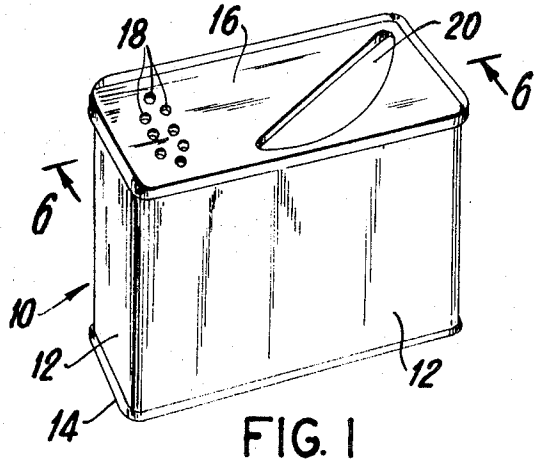

FIG. 1

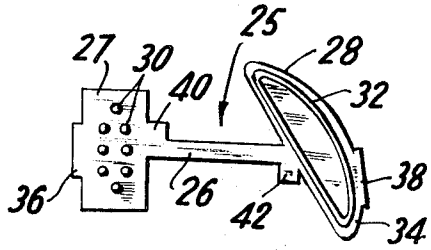

FIG. 2

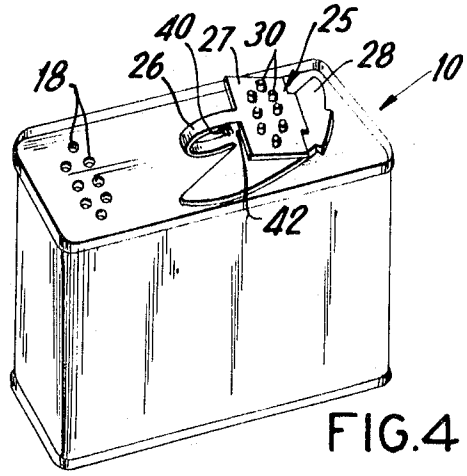

FIG. 4

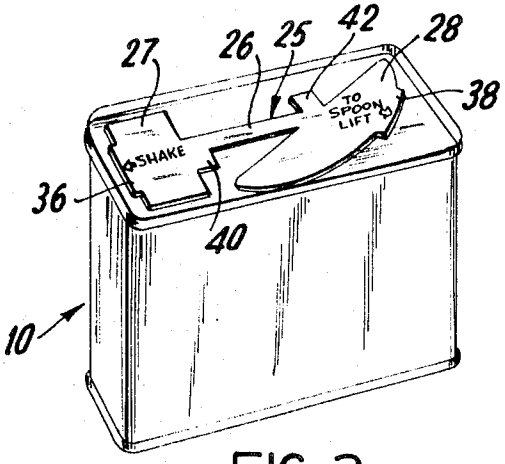

FIG. 3

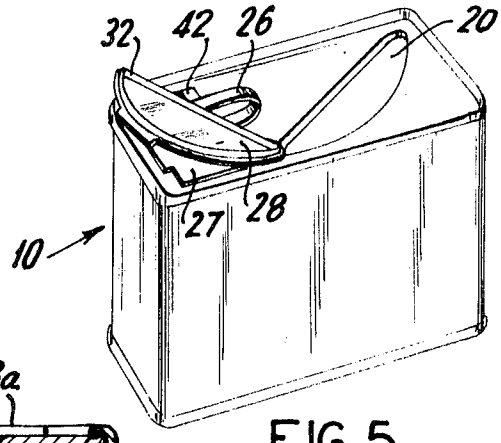

FIG. 5

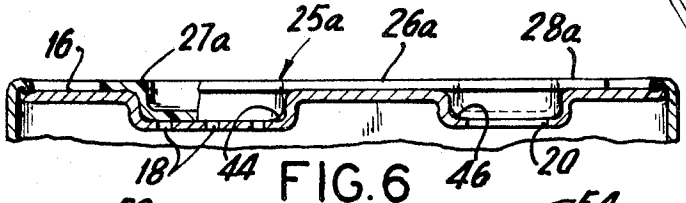

FIG. 6

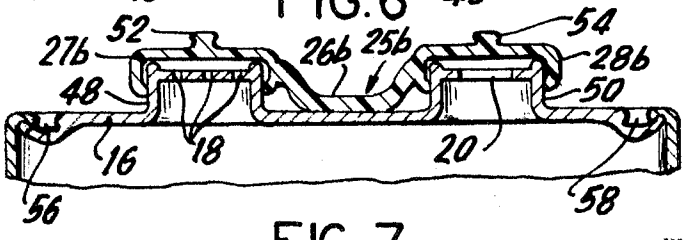

FIG. 7

INVENTOR
CHARLES HANNON
BY
March, Gillette & Wyatt
ATTORNEYS

DISPENSING CONTAINER WITH CLOSURES

This invention relates to dispensing containers having removable covers.

Known containers for shaking or spooning the contents therefrom are provided with covers over the dispensing apertures that are replaceable as by screw attachment or by force-fitting over the apertured portion.

A problem with such known containers is that the cover is easily misplaced and thereby lost or is difficult to remove.

It is an object of this invention to provide a dispensing container having a detachable cover that is maintained in place over the apertured portion of the container by friction fit.

It is a further object to provide the cover portion with an interlock arrangement for holding either of the closure flaps in opened position.

According to the invention there is provided on a wall of a dispensing container, two portions spaced apart and each provided with one or more apertures for dispensing contents of the container. A detachable cover is arranged to cover each portion with a friction-fit flap for each portion, each flap being connected to the other flap by a flexible elongated link or hinge of relatively narrow width. In order to gain access to the contents of the container, either of the flaps is pulled or pried from its seated position and turned away to uncover the aperture. The material forming the hinge of the cover is desirably flexible enough to be easily turned yet stiff enough to retain its position when placed away from the seated position. Accordingly, the material used for the hinge portion at least has preferably the property of both memory and flexibility.

In order to maintain firmly and positively the cover in its open position, regardless of the material from which it is formed, there is provided a pair of tabs at the opposite sides of the link at its respective junctions with the inset portions. These tabs serve to keep the opened inset portion in place when the tab of the opened inset is tucked under the tab of the seated inset. In the alternative, a ball-and-socket arrangement is provided for also holding the cover flap in open position, the ball being attached to a portion of the flap and the socket being suitably located on or in the wall of the container.

Other objects and advantages will be readily apparent from the following detailed specification and claims and the drawing appended hereto, wherein:

FIG. 1 is a perspective view of the dispensing container of the invention shown without a cover;

FIG. 2 is a plan view of the cover of the invention;

FIG. 3 is a perspective view of the container similar to FIG. 1 but shown with the cover in place;

FIG. 4 is a similar perspective view but showing the flap portion of the cover removed from one portion of the container to dispense the contents through the multiple-hole portion of the container;

FIG. 5 is a similar view of the container but showing the cover in position to dispense the contents therein from the larger hole or aperture in the top wall of the container;

FIG. 6 is a sectional view of the container of FIG. 1 as shown along the viewing line 6–6, showing a modification of the container and cover, and

FIG. 7 is a sectional view similar to FIG. 6 showing another modification of the container and cover of the invention.

Referring now to the drawing, a container 10 is formed of four sidewalls 12, a bottom wall 14 and a top wall 16 suitably joined to provide a hollow structure within which material, such as salt, pepper and the like, are inserted and kept for periodical dispensing for use in the kitchen or the like.

The top wall 16 is provided with a series of small holes 18 and a large spoon size hole 20 formed respectively in the top wall 16.

Referring now to FIG. 2, there is shown in a plan view, the inner face of a cover 25 according to this invention shown detached from the container 10. The cover comprises an enlarged generally rectangular flap 27 and a semicircular flap 28 connected by an elongated flexible hinge 26. The flap 27 is

provided with a plurality of spaced pins 30 of suitable size to effect a force-fit relation with the same plurality of apertures 18 when forced or inserted therein. The flap 28 is provided with a rib or wall 32 disposed along the peripheral or outer edge of the inner face of the flap 28 with suitable dimensions to effect a force-fit relation within the aperture or spoon hole 20 when inserted therein. The flap may be provided with a marginal edge 34 which will rest on the edge of the hole 20 when the flap 28 is seated in the hole 20. Finger tabs 36 and 38 are provided along one edge of the respective flaps 27 and 28 to provide means for the user to lift the flaps from the seated positions.

The container housing 10 may be of metal, cardboard or plastic. The cover 25 may be made of metal but is preferably made of plastic having the properties of pliability and memory. Thus, the material comprising the cover 25 is sufficiently flexible to allow for easy movement or bending of each of the flaps relative to the other flap about the hinge 26. In addition, the material of the cover should exhibit sufficient memory so that when a selected flap is oriented away from its cover position it will maintain its position when so oriented. The flaps 27 and 28 should be sufficiently rigid to maintain a firm closure over the apertures of the container when in place. Any of the known plastics are suitable both for the flap and hinge portions, and when suitably dimensioned will exhibit the properties needed, as will be apparent to those skilled in this art.

In operation with a container filled with the desired condiments, such as salt, pepper and the like, the cover 25 is pressed or forced into position and oriented so that the pins 30 are inserted into the corresponding holes 18 of the container 10. The flap 28 is inserted in the hole 20 by forcing the rib 32 in mating relation within the hole. The cover as thus seated in the container is illustrated by FIG. 3.

In order to gain access to the contents by either shaking the contents therefrom or by spooning same from the container, a flap is removed as desired in accordance with the method to be used. Accordingly, if the contents is to be shaken from the container, the flap 27 is lifted from its seated position by lifting the tab 36 and is bent away from the apertures or holes 18, as illustrated in FIG. 4.

If it is desired to remove the contents by spooning, the flap portion 28 is lifted from its seated position by tab 38 and bent over flap 27 away from the hole 20, as illustrated in FIG. 5.

Means are provided to firmly and positively hold either of the flaps 27 or 28 in open position away from the holes of the container. Several forms of such means are adaptable to the cover and container of the present invention. For example, as illustrated in FIGS. 2—5, the cover 25 is provided with a holding tab 40 at the junction of the hinge 26 and flap 27 and another holding tab 42 is provided on the opposite edge of hinge 26 joining with the flap 28.

In operation the tabs 40 and 42 serve to hold a flap in open position by an interlocking action. Thus, when flap 27 is removed from the holes 18 and bent over, as shown in FIG. 4, the tab 40 is inserted or slipped under the exposed edges of tab 42 and maintained in such position by the coaction of the two flaps, the seated flap 28 and its tab 42 serving as the base for holding flap 27. Similarly the tab 42 is inserted under tab 40 when the flap 28 is lifted from holes 20 and bent over flap 27.

Referring now to FIG. 6, there is shown a modification of a container and cover according to the principles of this invention. The top wall 16 is provided with a recess 44 and a recess 46, the bottom wall of each of which is provided respectively with holes 18 and 20, corresponding to those illustrated and described with respect to the first embodiment.

A cover 25*a* comprises a flap 27*a* and a flap 28*a* are suitably shaped to effect a force-fit relation with the recesses 44 and 46 when pressed or forced therein. A hinge 26*a* connects the two flaps and provides for flexibility and memory when one flap is removed and bent or turned over the other, as described heretofore with respect to the first embodiment.

A still further modification of the invention is shown in FIG. 7 wherein the holes **18** and **20** are provided in a flat surface of protuberances **48** and **50** which extend outwardly from the surface **16** of the container. The flaps in the form of caps **27***b* and **28***b* are arranged for a force-fit relation over the ends of the protuberances **48** and **50** to close or cover the apertures **18** and **20** when seated thereover. A flexible hinge **26***b* connects the two caps **27***b* and **28***b*, serving the same function as described heretofore with respect to the previous embodiments.

In order to maintain positively a cap in open position, there is provided a ball-and-socket arrangement comprising the balls **52** and **54** connected to a portion of the surface of the caps **27***b* and **28***b*. A socket in the form of holes **56** and **58** is provided in the surface of the container **16**, as shown at **56** and **58** arranged to receive a ball in force-fit relation in the usual ball-and-socket arrangements known in the art. Thus, when cap **28***b* is removed to uncover aperture **20**, ball **54** will be inserted in socket **56** to hold cap **28***b* in its opened position. In a similar fashion ball **52** is inserted in socket **58** to hold cap **27***b* in opened position.

It is thus seen that the objects of the invention have been accomplished. Means are provided for covering the apertures of a container so that the user can quickly remove the cover from either of a multiple choice arrangement for dispensing the contents without losing the cover. The cover provides a firm closure of the contents when not in use which is yet quickly and easily removed when desiring access to the contents.

It should be understood that the invention is not limited to a

rectangular form of container but, to the contrary, is applicable to a cylindrical or oblate form of container. It will be understood, furthermore, that the foregoing description of the details or exemplary structure is not to be construed in any way to limit the invention but that modifications may be made thereto without departing from the scope of the invention as set forth in the following claims.

I claim:

1. A dispensing container with a detachable cover, said container having dispensing apertures disposed in two, spaced portions in a wall of said container,

said cover having two flaps, each flap being adapted to cover a respective portion of said wall having said apertures;

a flexible hinge connecting said flaps;

means for detachably and independently connecting each of said flaps to said wall in friction-fit relation over respective junctions of each of said flaps with said hinge and adapted to detachably hold the tab of the other flap when detached from said wall to the tab of the flap which is attached to said wall.

2. A container according to claim **1** wherein said holding means comprises a ball-and-socket wherein a ball is attached to one of said flaps and the socket is disposed in said wall in such position to hold the ball of said flap inserted therein thereby to maintain uncovered the apertures associated with said flap.