(12) INTERNATIONAL APPLICATION PUBLISHED UNDER THE PATENT COOPERATION TREATY (PCT)

(19) World Intellectual Property Organization
International Bureau

(43) International Publication Date
22 June 2006 (22.06.2006)

PCT

(10) International Publication Number
WO 2006/064433 A2

(51) International Patent Classification:
A61B 5/15 (2006.01)

(21) International Application Number:
PCT/IB2005/054154

(22) International Filing Date:
9 December 2005 (09.12.2005)

(25) Filing Language: English

(26) Publication Language: English

(30) Priority Data:
04106494.0 13 December 2004 (13.12.2004) EP

(71) Applicant *(for all designated States except US)*: **KONINKLIJKE PHILIPS ELECTRONICS N.V.** [NL/NL]; Groenewoudseweg 1, NL-5621 BA Eindhoven (NL).

(72) Inventors; and

(75) Inventors/Applicants *(for US only)*: **AYATI, Shervin** [US/FR]; c/o Société Civile SPID, 156 Boulevard Haussmann, F-75008 PARIS (FR). **MORALES SERRANO, Francisco** [MX/FR]; c/o Société Civile SPID, 156 Boulevard Haussmann, F-75008 PARIS (FR). **FEIL, Hans** [NL/FR]; c/o Société Civile SPID, 156 Boulevard Haussmann, F-75008 PARIS (FR). **NEERKEN, Sieglinde** [DE/FR]; c/o Société Civile SPID, 156 Boulevard Haussmann, F-75008 PARIS (FR). **LUCASSEN, Gerhardus** [NL/FR]; c/o Société Civile SPID, 156 Boulevard Haussmann, F-75008 PARIS (FR).

(74) Agent: **CHAFFRAIX, Jean**; Société Civile SPID, 156 Boulevard Haussmann, F-75008 PARIS (FR).

(81) Designated States *(unless otherwise indicated, for every kind of national protection available)*: AE, AG, AL, AM, AT, AU, AZ, BA, BB, BG, BR, BW, BY, BZ, CA, CH, CN, CO, CR, CU, CZ, DE, DK, DM, DZ, EC, EE, EG, ES, FI, GB, GD, GE, GH, GM, HR, HU, ID, IL, IN, IS, JP, KE, KG, KM, KN, KP, KR, KZ, LC, LK, LR, LS, LT, LU, LV, LY, MA, MD, MG, MK, MN, MW, MX, MZ, NA, NG, NI, NO, NZ, OM, PG, PH, PL, PT, RO, RU, SC, SD, SE, SG, SK, SL, SM, SY, TJ, TM, TN, TR, TT, TZ, UA, UG, US, UZ, VC, VN, YU, ZA, ZM, ZW.

(84) Designated States *(unless otherwise indicated, for every kind of regional protection available)*: ARIPO (BW, GH,

[Continued on next page]

(54) Title: CANNULA INSERTING SYSTEM

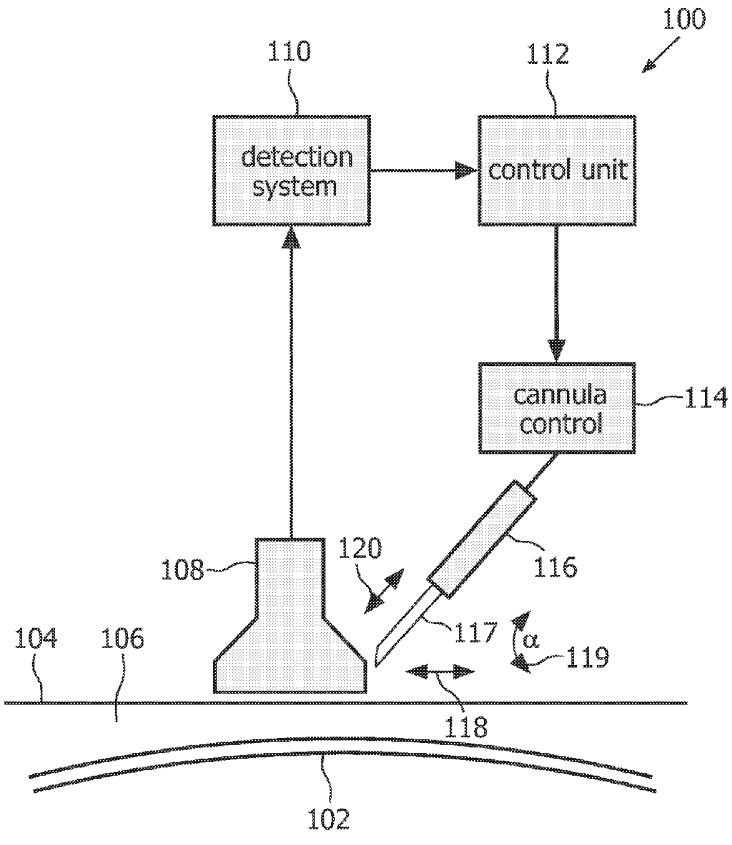

(57) Abstract: The present invention provides a highly automated puncture system for inserting a cannula or a needle into a blood vessel of a person or an animal. The puncture system has an acquisition module that allows for determining at least one location of a blood vessel underneath the surface of a skin and that is further enabled to determine an optimal puncture location that is well suitable for inserting a cannula into the blood vessel. Further, the puncture system has an actuator for moving and aligning the cannula to a determined position. The system is further adapted to autonomously insert the cannula into the blood vessel for multiple purposes, such as blood withdrawal, venous medication and infusions.

WO 2006/064433 A2

GM, KE, LS, MW, MZ, NA, SD, SL, SZ, TZ, UG, ZM, ZW), Eurasian (AM, AZ, BY, KG, KZ, MD, RU, TJ, TM), European (AT, BE, BG, CH, CY, CZ, DE, DK, EE, ES, FI, FR, GB, GR, HU, IE, IS, IT, LT, LU, LV, MC, NL, PL, PT, RO, SE, SI, SK, TR), OAPI (BF, BJ, CF, CG, CI, CM, GA, GN, GQ, GW, ML, MR, NE, SN, TD, TG).

Declaration under Rule 4.17:

— *as to applicant's entitlement to apply for and be granted a patent (Rule 4.17(ii))*

Published:

— *without international search report and to be republished upon receipt of that report*

For two-letter codes and other abbreviations, refer to the "Guidance Notes on Codes and Abbreviations" appearing at the beginning of each regular issue of the PCT Gazette.

Cannula inserting system

The present invention relates to the field of cannulation, hence to the insertion of a cannula or needle into the vascular system of a person or an animal.

Insertion of a cannula or a needle into a person's vascular system is an everyday task for physicians and has to be performed with high accuracy and care. Therefore, medical personnel has to be highly skilled for such tasks as blood withdrawal, drug administration or infusions. The physician has to find an appropriate blood vessel and introduce a distal end of a cannula or a needle with very high precision in order to prevent the generation of hematoma or effusions. Depending on the vascular system of a person even a highly skilled and experienced physician may require several attempts to insert a needle or a cannula at a suitable location into a blood vessel. Such multiple attempts of puncturing are rather painful and cause appreciable patient discomfort. Moreover, such multiple attempts are also rather time-consuming, which is disadvantageous especially in emergency situations.

There exist various devices and systems providing needle or cannula guidance and assisting a physician with inserting the cannula or needle into the vascular system of a patient. The document US 2003/0060716 discloses a device for inserting the distal end of a hollow needle into a blood vessel. There are provided locating means as an aid for locating a blood vessel and a holder for the cannula to be introduced. Also the introduction procedure is mechanized in that for an indwelling cannula and for a puncture cannula in each case there is provided a separate holder, which holders are traversable along a guide independently of one another in the direction of introduction as well as in the counter direction. In order to assist (?) the physician in aligning the device with respect to (?) the patient, there is provided an optical or acoustic display which emits a signal when the device is located in the designated position for puncture of the

located vessel. The device is moved manually over the skin until the display lights up, thereby indicating that an optimal position of the device with respect to the vessel is reached for introducing the cannula.

Even though the disclosed device provides mechanized introduction of a cannula into a blood vessel, alignment and positioning of the device with respect to the patient and the located blood vessel has to be performed manually. Furthermore, during introduction of a cannula the device must not be moved or tilted, which requires specific skills of the physician or medical personnel. Also, the device only indicates that an optimal position for introducing the cannula has been reached, but does not provide any active guidance for finding this optimal position. Hence, the physician making use of the device requires at least profound skills and experience to find the optimal position of the device for introducing the cannula.

The present invention therefore aims to provide a highly automated needle and cannula inserting system providing accurate, reliable as well as less painful insertion of the needle or cannula into the vascular systems of a person or animal and not requiring skilled handling by the user.

The present invention provides a puncture system for inserting a needle or cannula into a blood vessel of a person or an animal. The puncture system provides highly automated cannulation, i.e. insertion of a cannula or needle into a vascular system of a patient, and comprises location determination means providing at least a location of the blood vessel. The system further comprises processing means for determining a puncture location of the blood vessel, hence an optimal location of the blood vessel that is suitable for needle or cannula insertion. This puncture location is determined by making use of output signals of the location determination means. The puncture system further has fastening means for fixing the needle or cannula with respect to the puncture system. The fastening means are moveable with respect to an inserting direction and at least with respect to a second direction that is substantially non-parallel to the inserting direction.

The inserting direction is typically given by the alignment of the needle or cannula and determines an angle at which the needle or cannula is intended to penetrate the vascular system. Further, the fastening means are also moveable along at least a second direction, such as e.g. a direction substantially parallel to the surface of the skin of the person or animal. Hence, the needle or cannula is moveable with respect to the location determination means as well as with respect to a blood vessel.

Furthermore, the fastening means provide the possibility of manual movement and alignment of the needle or cannula and provide the possibility of manual insertion of the distal end of the needle or cannula into the blood vessel at the puncture location. In essence, this provides the possibility of semi automated insertion of the needle or cannula. The puncture system autonomously allocates and determines a suitable puncture location and guides an operator to insert the needle or cannula at the specified location into the blood vessel. The actual insertion is performed in an operator- supported manner. The force required for inserting the needle or cannula into the blood vessel is then provided by the operator, thus guaranteeing a maximum of sensitivity during needle or cannula insertion.

For instance, the location determination means and the processing means serve to locate and identify a blood vessel and to determine the puncture location, but insertion of the needle or cannula is not performed in a completely automated way but in a way that is at least partially controlled by the operator. For example, the puncture system may direct the needle or cannula along the inserting direction and may also translate the cannula to the inserting position, whereas insertion of the cannula or needle, i.e. translation of the cannula or needle along the inserting direction, is performed in an operator-supported manner.

Typically, the location determination means are adapted to provide a plurality of geometric data of the blood vessel, which allows to determine parameters, such as blood vessel diameter, blood vessel size as well as depth under the skin. Further, the location

determination means effectively provide determination of the blood vessel's course. Such geometric and location information of the blood vessel allows an optimal puncture location to be determined with high accuracy and reliability, thus finally allowing to minimize the danger of injury to a vessel wall. Consequently, the occurrence or extent of bleeding, hematoma or inflammation can be reduced to a minimum. Also by effective usage of the obtained geometric and location data of the blood vessel, multiple attempts of needle or cannula insertion can be prevented, because reliable and accurate inspection of the blood vessel prior to insertion of the needle or cannula substantially guarantees that the needle or cannula can be correctly inserted or introduced into the vascular system ina single attempt. In particular, in emergency situations it is obvious that this guided puncture is highly advantageous compared to entirely manual cannulation.

According to a further embodiment, the location determination means are not only adapted to detect and identify a blood vessel underneath the skin surface, but they also provide location determination of the cannula's distal end. Hence, by means of the location determination means, it can be precisely checked whether the cannula or needle has been correctly inserted into the vascular system of the person or animal. Additionally, the puncture system features indication means that are adapted to indicate whether the cannula or needle has been correctly inserted into the blood vessel by the puncture system.

According to a further embodiment of the invention, the location means are further adapted to track the location of the needle's or cannula's distal end during insertion of the needle or cannula. The puncture system further has control means for controlling the movement of the needle or cannula in response to the tracking of the needle's or cannula's distal end. In this way, the puncture system is provided with feedback allowing to monitor and check whether the distal end of the needle or cannula is correctly inserted. This functionality effectively represents a safety mechanism of the puncture system and helps to prevent that despite an accurate inspection of the blood vessel the cannula might be incorrectly introduced, which may have serious consequences for the person's or animal's health.

Typically, the location determination means provide course and location determination of the blood vessel as well as tracking of the needle's or cannula's distal end at a sufficient repetition rate that allows fast reaction in case the cannula introduction deviates from a determined path or schedule. Also, the location determination means allow to check whether the distal end of the needle or cannula has been inserted correctly into the person's vascular system. Hence, the location determination means not only provide a control mechanism during needle or cannula insertion but also allow to check the final position of the needle or cannula after the intravascular insertion has been completed.

According to a preferred embodiment, the puncture system further comprises actuation means that are adapted to autonomously move the fastening means into an inserting position and that are further adapted to insert the distal end of the needle or cannula into the blood vessel at the puncture location. In this embodiment the invention provides entirely automated needle or cannula insertion. Hence, the inventive puncture system provides location determination of the blood vessel, autonomous alignment and movement of the cannula to an inserting position and inserting direction and, finally, automated insertion of the cannula into the blood vessel at a location determined by the puncture system itself.

In this sense the inventive puncture system provides entirely automated insertion of a needle or cannula into a person's or animal's blood vessel, which is applicable to e.g. blood sampling or blood withdrawal, drug medication or infusion, blood transfusion, general catheter insertion and dialysis. Preferably, the entire process of locating a blood vessel, determining a puncture location as well as mechanically shifting and aligning the needle or cannula and, finally, inserting the needle or cannula can be performed without any user interaction, allowing to execute the above-mentioned tasks in a highly automated manner that may even be performed by unskilled or low-skilled medical personnel.

According to a further embodiment, the actuation means are manually controllable by an operator for manual insertion of the cannula by the operator. Even so, if implemented as an autonomous system, the puncture system also allows for partially automated insertion of a needle or cannula.

In a further preferred embodiment, the invention comprises fixing means for attaching the puncture system to the surface of the skin of the person or of the animal. Typically, these fixing means are designed as a cuff or collar that can be rigidly attached to e.g. an arm or arm bend of a person but also to other body parts of a person or animal that are suitable for e.g. blood withdrawal or infusions, like the back of the hand. However, application of the needle insertion system is by no means restricted to the above-mentioned parts of a body. In particular, by making effective use of the automated, high-precision blood vessel location determination, other application scenarios become conceivable. For instance, the needle or cannula inserting system may become applicable to body sites that are not yet accessible by manual puncturing performed by educated medical personnel. Since the fixing means provide rigid attachment of the puncture system to a suitable body part, the fastening means are moveable with respect to these fixing means in order to bring the needle or cannula into the determined inserting position.

According to a further preferred embodiment of the invention, the location means comprise optic and/or acoustic or opto-acoustic detection or signaling means and corresponding processing means that are adapted to perform a corresponding signal acquisition and signal processing for deriving relevant parameters for determination of the puncture location. The detection or signaling means may be embodied as imaging and image processing means, but may also be implemented as an acquisition system making use of e.g. Doppler based techniques that do not require image acquisition and image processing.

Typically, the location determination means are realized by making use of techniques, such as Near infrared imaging, Optical Coherence Tomography, Photo Acoustic Imaging or Ultrasound Techniques. In particular, Ultrasound techniques, Optical Coherence Tomography and Photo Acoustic Imaging provide inspection and analysis of the blood vessel and allow for precise acquisition of blood vessel-related data, even if the blood vessel is located at an appreciable depth under the skin of the person. Other techniques, that might be based on Doppler signals, like Doppler Ultrasound or Doppler Optical Coherence Tomography that are adapted to locate a flowing or streaming liquid, such as blood flowing in a blood vessel, in principle also allow precise and reliable location determination of a blood vessel underneath the skin surface. Also, combinations of Doppler-based and imaging-based signal acquisition techniques might be implemented.

In a further embodiment, the processing means are further adapted to determine the inserting position in response to the puncture position, which in turn is obtained by means of an optimization procedure performed by the processing means, that accounts for at least one blood vessel parameter that is derived from a data acquisition performed by the location determination means. The optimization procedure is preferably performed by making use of a plurality of blood vessel parameters, such as blood vessel size, blood vessel diameter, location and depth underneath the skin surface, the course of the blood vessel as well as the general geometry of the blood vessel. For example, the processing means are supplied with graphical data processing means in order to recognize and identify particular regions of a blood vessel that are not suitable for puncture, such as regions of a blood vessel that are near a branch or a junction. Also, the processing means and the location determination means may determine regions of a blood vessel featuring a narrowing that might be due to calcification. Hence, the optimization procedure serves to determine an optimal location of the blood vessel that is suitable for puncture, and which location is expected to cause a minimum of discomfort or pain.

The optimization procedure determines the optimal puncture position of the blood vessel, but it may further be applied to determine a corresponding inserting position for the cannula that is governed by the puncture position as well as by the inserting direction of the cannula. The inserting direction, i.e., the angle at which the needle or cannula is to be inserted into the blood vessel, is also preferably determined by means of the optimization procedure and typically varies between 10° and 45° with respect to the person's skin. Depending on the blood vessel's depth underneath the skin surface and the inserting direction, the inserting position may substantially deviate from the puncture position of the blood vessel.

According to a further preferred embodiment, the orientation of the needle or cannula and the inserting direction are modifiable and the actuation means are adapted to translate and align the fastening means in three spatial directions. In this way, the needle or cannula may be freely arranged and oriented within a range of coverage of the puncture system and may therefore be arbitrarily positioned as determined by the processing means and the puncture location.

According to a further preferred embodiment, the needle or cannula can be used for blood withdrawal and/or drug infusion and/or blood transfusion, and/or catheter insertion and/or dialysis applications. Hence, the invention can be universally applied for various different medical purposes that require insertion of a needle or cannula into a vascular system of a person. Respective fastening means for fixing the needle or cannula are typically realized by making use of a modular concept allowing for a quick and secure adaptation of the needle or cannula inserting system to a multitude of different purposes.

In another preferred embodiment, the invention provides autonomous insertion of the needle's or cannula's distal end into the blood vessel in response to detection that the needle or cannula is at the insertion position. Hence, insertion of the needle or cannula is typically performed by means of a two-step process. In a first step the needle or cannula

is translated and aligned in the direction of the inserting position and moved (?) along the inserting direction, after which, in the second step, any movement of the needle or cannula is disabled except for a movement along the inserting direction. In this way, it can be effectively guaranteed that during cannula insertion a potentially harmful lateral movement of the needle or cannula is prevented. Hence, during cannula insertion the lateral position of the cannula remains substantially fixed with respect to the surface of the skin, i.e. the needle or cannula is only moved along the inserting direction.

In another aspect, the invention provides a computer program product for a puncture system that is adapted to insert a needle or cannula into a blood vessel of a person or animal. The computer program product is executable by processing means of the puncture system and is further operable to perform a determination of at least one blood vessel parameter of the blood vessel by processing of the output of location determination means. The computer program product is inherently adapted to recognize and identify a blood vessel. It is further enabled to exploit the blood vessel recognition and identification for acquiring the at least one relevant blood vessel parameter. This at least one blood vessel parameter is at least representative of a blood vessel's location underneath the surface of the skin. Preferably, a plurality of blood vessel parameters representing blood vessel size, blood vessel diameter as well as a course of the blood vessel, geometry of the blood vessel and depth underneath the surface of the skin can be precisely determined. The computer program product is further operable to determine a puncture location of the blood vessel by processing of the at least one blood vessel parameter. Preferably, by making use of a plurality of blood vessel parameters, the computer program product is operable to perform an optimization procedure in order to determine an optimal puncture location of the blood vessel.

Further, the computer program product is operable to calculate a driving signal for driving actuation means of the puncture system in order to insert the needle's or cannula's distal end into the blood vessel at the puncture location. In this way, the computer program product allows to analyze acquired blood vessel data in order to

determine an optimal puncture location and to control mechanical drives and actuators for inserting the needle's or cannula's distal end into the blood vessel in a precise, reliable and less painful way compared to manual needle or cannula insertion performed by medical personnel or by a physician.

In still another aspect, the invention provides a puncture system that comprises a cuff for fixing the puncture system to a body part of a person or animal and an apparatus for detecting a blood vessel underneath the surface of the skin of the body part and for autonomously inserting a needle or cannula into the blood vessel in response to detection of at least the blood vessel's location. The autonomous insertion of the cannula comprises acquisition of geometric data of the blood vessel, determination of a puncture location of the blood vessel and the corresponding positioning and aligning of the needle or cannula for inserting the distal end of the cannula into the blood vessel at the puncture location. Therefore, the puncture system comprises an acquisition system, preferably an image acquisition system for acquiring location, course and also other geometric data of the blood vessel. Further, the system has a processing unit for determining a puncture location of the blood vessel and at least an actuator for moving and aligning the needle or cannula in an appropriate way.

In a further preferred embodiment, the system further comprises a movement control unit that is adapted to process data provided by the acquisition system during insertion of the cannula in order to control the needle's or cannula's movement during insertion into the tissue of the person or animal.

In a further embodiment, the puncture system is adapted to insert the needle or cannula and to be detached from the inserted needle or cannula in such a way that the puncture system is removable from the body part, leaving the needle or cannula inserted in the biological tissue, e.g. in the skin. Therefore, the fastening means are adapted to dissociate the needle or cannula, if the needle or cannula has been correctly inserted. Further, if the needle or cannula is correctly inserted, also the cuff can be loosened, thus

allowing to detach the entire puncture system from the body part. This feature is particularly advantageous with respect to catheter as well as infusion-related application scenarios.

Further, it is to be noted that any reference signs in the claims are not to be construed as limiting the scope of the present invention.

In the following, various embodiments of the invention will be described in greater detail by making reference to the drawings in which:

Figure 1 illustrates a schematic block diagram of the inventive puncture system,

Figure 2 shows a schematic illustration of puncture location and inserting position determined by the puncture system,

Figure 3 shows attachment of the puncture system to a suitable body part,

Figure 4 shows a flowchart of how to determine puncture location and perform needle or cannula insertion,

Figure 5 shows a flowchart of needle or cannula insertion with skin penetration detection.

Fig. 1 shows a schematic block diagram of the puncture system 100. The puncture system 100 has an acquisition module 108, a detection system 110, a control unit 112, a cannula control 114 as well as a cannula mount 116. The cannula 117 itself can be rigidly attached to the cannula mount 116 that represents fastening means for fixing the cannula and means for moving and aligning the cannula 117 as controlled by the cannula control unit 114. The cannula 117 or the cannula mount 116 can be moved along the inserting direction 120 as well as along direction 118 that is substantially parallel to the surface of the skin 104. In principle, direction 118 can be any direction in the plane parallel to the skin surface. Typically, the cannula 117 and the cannula mount 116 are moveable by

means of the cannula control 114 in all three spatial directions. Also, the angle α 119 between the inserting direction 120 and the surface of the skin 104 may be arbitrarily modified by means of the cannula control 114 in a way that is determined by means of the detection system 110 and the control unit 112.

Fig. 1 shows the application of the puncture system to a person by means of a cross sectional illustration of the person's skin 104. Underneath the surface of the skin 104 there is located a blood vessel 102 that is surrounded by tissue 106. When the puncture system 100 is attached to the skin 104 of the person, the acquisition module 108 is adapted to acquire optical, opto-acoustic or acoustic data from the tissue 106 and the blood vessel 102 that allows to classify at least one blood vessel parameter, such as location of the blood vessel, diameter of the blood vessel, size of the blood vessel, depth underneath the surface of the skin 104, geometry of the blood vessel, blood flow or similar parameters.

Preferably, the acquisition module 108 is realized by means of Ultrasound, Near-infrared imaging, Optical Coherence Tomography, Doppler Ultrasound, Doppler Optical Coherence Tomography or Photo Acoustic techniques that allow to generate a signal providing identification of the blood vessel 102. Signals acquired by the acquisition module 108 are provided to the detection system 110, which in turn generates a signal of the blood vessel 102. Hence, detection system 110 and acquisition module 108 are coordinated in the sense that the detection system 110 is suitable to perform signal processing of signals obtained from the acquisition module 108. By making use of optical, opto-acoustic or ultrasound detection, the blood vessel 102 may be precisely located even at an appreciable depth underneath the surface of the skin 104. Additionally, or alternatively, also Doppler techniques may be applied including e.g. Doppler Ultrasound techniques allowing for detection of e.g. blood flow in the blood vessel 102. Also, Doppler Optical Coherence Tomography might be correspondingly applied.

Acquisition of location data, geometric data as well as data related to the course of the blood vessel 102, may also be obtained without imaging of the blood vessel. Therefore, the imaging system 110 does not necessarily have to provide a visual image. Instead the imaging system 110 may be enabled to directly extract blood vessel parameters from the signals acquired by the acquisition module 108. Hence, extraction of blood vessel parameters may be performed by means of the detection system 110 or by the control unit 112

The control unit 112 has a processing unit that is enabled to process the data obtained from the detection system 110. Depending on the type of data provided by the detection system 110, the processing unit of the control unit 112 may further process blood vessel parameters in order to extract required blood vessel parameters from a signal of the blood vessel 102.

The control unit 112 serves to process the blood vessel parameters in order to find and determine a puncture location of the blood vessel 102 that is ideally suited for insertion of the cannula 117. In a basic embodiment this puncture location may be determined with respect to location and course of the blood vessel 102. More sophisticated implementations further provide the vessel geometry in the vicinity of an intended puncture location as well as the vessel diameter and depth underneath the surface of the skin 104.

Typically, the puncture location may be determined as a result of an optimization procedure taking into account all kinds of blood vessel parameters. For instance, the optimization procedure that is typically performed by means of the processing unit of the control unit 112 may specify that a puncture location must not be in the vicinity of a branch or junction of a blood vessel 102. Further, a puncture location may require a certain diameter of the blood vessel 102. Also, the puncture location may be determined with respect to a smallest possible depth of the blood vessel 102 underneath the surface

of the skin 104. Additionally, the control unit may also determine the inserting direction 120, specifying at which angle α 119 the cannula 117 has to be introduced into the skin 104 and the tissue 106.

Having determined the puncture location, the control unit 112 is further adapted to specify an inserting position for the cannula 117. The inserting position for the cannula 117 specifies a position as well as an alignment or direction in which the cannula 117 has to be moved along the inserting direction, i.e. the direction coinciding with the longitudinal direction of the cannula, in order to impinge on the blood vessel at the determined puncture location with its distal end.

After determination of puncture location and inserting position, the control unit 112 generates corresponding driving signals to the cannula control 114, which in turn is adapted to move the cannula mount 116 into a corresponding position. The cannula control 114 is typically rigidly connected to the cannula mount 116 and is provided with e.g. electro-mechanical means, such as electromotive actuators, like e.g. piezo driven actuators that allow for a precise electronically controlled mechanical movement of the cannula 117. Typically, the cannula control 114 provides lateral displacement of the cannula mount 116 as well as shifting of the cannula mount 116 or the cannula 117 along the inserting direction 120.

As soon as the cannula 117 advances towards the blood vessel 102, the acquisition module 108 also acquires position data of the distal end of the cannula 117. Especially, when the cannula 117 has already penetrated the skin 104, detection of its distal end allows to control the movement of the cannula 117 through the tissue. As soon as the acquisition module 108 detects that the distal end of the cannula 117 does not properly hit the blood vessel 102, the entire process of cannula insertion may be aborted and the cannula 117 withdrawn. In this way, simultaneous acquisition of blood vessel related data and position data of the distal end of the cannula 117 allows to effectively realize a feedback and security mechanism for the autonomous puncture system. Since the

puncture system 100 is basically applicable to any kind of puncture related applications, like blood sampling, blood withdrawal, infusion or medication, the cannula can be effectively replaced by a needle or catheter that are specific to dedicated applications.

Fig. 2 shows a schematic illustration of puncture location 124 and the inserting position 126 that are determined by the puncture system. Similar to Fig. 1, a cross sectional view of a person's or animal's skin is shown. The puncture system 100 determines the puncture location 124 of the blood vessel 102 by making use of blood vessel parameters that were obtained by means of the acquisition module 108 and corresponding detection and processing means. Here, the blood vessel 102 shows a uniform diameter and the puncture location 124 is determined by a position of the blood vessel 102 that is closest to the surface of the skin 104. This puncture location 124 may also be chosen by an experienced physician for manually inserting the cannula into the blood vessel 102. Hence, the inventive puncture system aims to determine a puncture location that provides a minimum of discomfort and pain as well as a minimum of danger of injury to the vessel wall, which may have severe consequences for the health status of the person in question.

Furthermore, the control unit 112 may also determine an optimal insertion angle α 119 that determines the insertion direction 120 of the cannula 117. Since the cannula 117 is typically introduced at a non-perpendicular angle with respect to the surface of the skin 104, the point of penetration through the skin 104 and the puncture location 124 typically describe an insertion path 128 for the cannula 117 that coincides with the inserting direction 120. Before advancing the cannula 117 into the skin 104, it has to be moved to the inserting position 126, featuring a lateral displacement from the puncture location 124. In this context, lateral displacement is to be interpreted as a displacement in the plane of the surface of the skin 104. For instance, the inserting position 126 may be determined as the position where the distal end of the cannula 122 coincides with the insertion path 128.

Insertion of the needle is preferably performed as a two-step process, wherein the first step is given by moving the cannula 117 to the inserting position 126 by means of the cannula control unit 114. As soon as the inserting position 126 has been reached by the distal end of the cannula 122, the second step of advancing and inserting the cannula 117 into the skin 104, the tissue 106 and finally into the puncture location of the blood vessel 102 is initialized. Advancing and inserting of the cannula 117 is controlled by means of the acquisition module 108 and the control unit 112 in order to correct the movement of the cannula 117 during the insertion process. However, as soon as the acquisition module 108 detects that the distal end of the cannula 122 has penetrated through the surface of the skin 104, a lateral movement of the cannula by means of the cannula control 114 is disabled for preventing severe injury to the skin 104 and the tissue 106.

Additionally, the puncture system 100 may be provided with a release module in order to manually control the insertion of the cannula 117. Then, a user of the puncture system may manually trigger the advancing of the cannula 117 along the inserting direction 120 and may manually control whether the inserting position126 and/or the puncture location 124 determined by a puncture system are reasonable for inserting a cannula.

Fig. 3 schematically shows an embodiment of the puncture system applied to a body part of a person or an animal. Here, the puncture system is designed as an apparatus 202 for detecting a blood vessel underneath the surface of the skin of the body part 200 and for autonomously inserting a cannula into the blood vessel in response to detection of at least the blood vessel's location. The apparatus 202 is further rigidly attached to a cuff 204 that provides fixing of the apparatus 202 to the body part 200. Typically, the cuff 204 or collar features a clearance which is at least partially covered by the apparatus 202 in order to provide direct access to the skin of the body part 200. The illustrated apparatus 202 at least comprises the cannula and associated fastening means as well as actuation means for positioning and inserting the cannula into the blood vessel, and it further has an acquisition module for acquiring blood vessel related data.

In typical implementations the needle or cannula can be connected to various reservoirs

for either blood withdrawal or drug delivery. Hence, the needle or cannula may serve as an injection needle or cannula or as a withdrawal cannula. The embodiment illustrated in Fig. 3 provides a high degree of failure safety, since for e.g. blood withdrawal, the puncture system only has to be rigidly attached to the accessible body part 200 by means of the cuff 204. A cannula or needle insertion is then autonomously performed by the puncture system, thus allowing unskilled and untrained personnel to perform such invasive procedures.

Fig. 4 shows a flowchart of how to determine a puncture and inserting position and perform the needle or cannula insertion. In a first step 400 a signal of the blood vessel 102 is acquired by means of the acquisition module 108. The acquired data is then processed by means of the processing unit of the control unit 112 in order to determine e.g. location, depth, size, course and general geometric data of the blood vessel. Based on these blood vessel parameters representing blood vessel location and general properties of the blood vessel, in step 404 insertion parameters for the needle or cannula insertion are determined, preferably by means of an optimization procedure performed by the control unit 112. The insertion parameters represent at least the puncture location 124 of the blood vessel 102. Preferably, the insertion parameters also specify the inserting position 126 as well as the inserting direction given by the angle 119.

After the insertion parameters have been determined, the cannula is moved in step 406 to the insertion position. Hence, the needle or cannula is aligned along the inserting direction as well as laterally displaced to the inserting position 126. If the distal end 122 of the needle or cannula has reached the determined inserting position, in step 408 the insertion of the needle or cannula into the blood vessel starts. During this movement the following steps 410 through 420 are performed.

During the advancing of the needle or cannula along the inserting direction 120, the distal end of the needle or cannula is monitored in step 410 by means of the acquisition module 108 and corresponding signal processing means. In the successive step 412, the

distal end of the needle or cannula or the needle or cannula tip's position is compared with the trajectory of the insertion path 128. In cases where the position of the distal end of the cannula 117 clearly deviates from the calculated insertion path 128, the method continues with step 414, where the needle or cannula introduction or insertion is aborted and the needle or cannula is withdrawn from the tissue in the opposite direction. Otherwise, if in step 412 the distal end of the cannula coincides with the insertion path 128 at least within a predefined margin, the method continues with step 416, where the position of the distal end of the needle or cannula is compared with the calculated end position inside the blood vessel 102.

If the end position has not yet been reached, the method continues with step 418, where the needle or cannula introduction continues. Thereafter, the method returns to step 410, where the position of the distal end of the needle or cannula 122 is repeatedly monitored. It is to be noted that the movement of the needle or cannula is performed as a continuous movement, i.e. it is not performed stepwise as the single steps of the flowchart in Fig. 4 may suggest. The loop described by steps 410 through 418 continues as long as the end position of the cannula has not been reached. As soon as in step 416 the end position of the cannula has been detected, the procedure continues with step 420, where the cannula insertion is terminated.

Fig. 5 shows a flowchart of the introduction of the needle or cannula into the blood vessel 102, making use of skin penetration detection of the needle or cannula. Here, steps 500 through 504 correspond to steps 400 through 404 of Fig. 4. In step 506 the needle or cannula is moved to the inserting position by a translational movement controlled by the needle or cannula control unit 114. Thereafter, in step 508 the inserting direction of the cannula 117 is adjusted according to the determined inserting angle 119. Alternatively, needle or cannula insertion may also be performed by making use of a predefined insertion angle, thus allowing to reduce the complexity of the puncture system. In step 510 the movement of the cannula along the inserting direction is started, making use of position determination of the cannula's distal end or controlling the

inserting motion.

In step 512 the system detects the penetration of the skin of the person by the cannula and in the subsequent step 514 all lateral and orientational movement or adjustment of the cannula is disabled. Detection of skin penetration can be performed by means of the acquisition module 108 and its corresponding signal processing means. Also, skin penetration might be detected by means of a pressure sensor being implemented in the cannula mount 116. Disabling lateral cannula movement serves as an effective means of injury prevention. After lateral adjustment of the cannula has been disabled in step 514, in step 516 introduction or insertion of the cannula into the blood vessel is continued by making use of the feedback control mechanism illustrated by the flowchart of Fig. 4. As soon as the estimated end position of the cannula has been reached the procedure stops in step 518.

In general, cannula or needle insertion as described by the flowchart of Figure 5 can be performed with a feedback mechanism providing the actual location of the cannula's distal end, preferably during insertion of the cannula. However, the entire needle or cannula insertion process may also be performed without such a feedback mechanism, allowing to reduce the complexity of the puncture system. In this case, after determination of the puncture location as well as determination of required blood vessel parameters, needle or cannula insertion can be autonomously or manually performed, without continuous needle or cannula tracking, by just making use of the determined blood vessel parameters.

LIST OF REFERENCE NUMERALS

100	puncture system
102	blood vessel
104	skin
106	tissue
108	acquisition module
110	detection system
112	control unit
114	cannula control
116	cannula mount
117	cannula
118	direction
119	angle
120	inserting direction
122	distal end of cannula
124	puncture location
126	inserting position
128	insertion path
200	body part
202	apparatus
204	cuff

CLAIMS

1. A puncture system (100) for inserting a cannula (117) into a blood vessel (102) of a person or animal, comprising:

- location determination means for determining at least one location of the blood vessel,
- processing means for determining a puncture location (124) of the blood vessel depending on the output of the location determination means,
- fastening means (116) for fixing the cannula, said fastening means being moveable along an inserting direction (120) and at least a second direction (118) being substantially non-parallel to the inserting direction, for insertion of the distal end (122) of the cannula into the blood vessel at the puncture location.

2. The system according to claim 1, wherein the location determination means are further adapted to determine the location of the cannula's distal end (122).

3. The system according to claim 1, wherein the location determination means are further adapted to track the location of the cannula's distal end (122) during insertion of the cannula (117) and further comprise control means for controlling the movement of the cannula in response to the tracking of the cannula's distal end.

4. The system according to claim 1, further comprising actuation means being adapted to autonomously move the fastening means into an inserting position (126) and to insert the distal end (122) of the cannula into the blood vessel at the puncture location.

5. The system according to claim 1, further comprising fixing means (204) for attaching the puncture system to the surface of the skin (104) of the person or animal.

6. The system according to claim 1, wherein the location determination means comprise optic and/or acoustic or opto-acoustic detection and signal acquisition means (108, 110) and wherein the processing means (110, 112) are adapted to perform signal processing.

7. The system according to claim 6, wherein the detection and signal acquisition means (108, 110) are implemented by making use of image acquisition and image processing techniques and /or by making use of Doppler implemented location determination techniques.

8. The system according to claim 1, wherein the processing means are further adapted to determine the inserting position (126) in response to the puncture position (124) being obtained by means of an optimization procedure accounting for at least one blood vessel parameter being derived from the output of the location determination means.

9. The system according to claim 1, wherein the orientation of the cannula (117) and the inserting direction (120) are modifiable and wherein the actuation means are adapted to translate and align the fastening means in three spatial directions.

10. The system according to claim 1, wherein the cannula (117) is applicable to blood withdrawal and/or drug infusion and/or blood transfusion, and/or catheter insertion and/or dialysis applications.

11. The system according to claim 1, wherein insertion of the cannula's distal end (122) into the blood vessel (102) is autonomously performed in response to detection that the

cannula (117) is at the insertion position (126).

12. A computer program product for a puncture system (100) for inserting a cannula into a blood vessel (102) of a person or animal, the computer program product comprising instructions being executable by processing means of the puncture system for performing the steps of:

- determining at least one blood vessel parameter of the blood vessel by processing the output of location determination means, the at least one blood vessel parameter being at least representative of the blood vessel's location,
- determining a puncture location (124) of the blood vessel by processing of the at least one blood vessel parameter,
- calculating a driving signal for driving actuation means (114) to insert the cannula's distal end (122) into the blood vessel at the puncture location.

13. A puncture system comprising:

- a cuff (204) for fixing the puncture system to a body part (200) of a person or animal,
- an apparatus (202) for detecting a blood vessel underneath the surface of the skin (104) of the body part and for autonomously inserting a cannula into the blood vessel (102) in response to detection of at least the blood vessel's location.

14. The system according to claim 13, wherein the apparatus (202) further comprises:

- an acquisition system (108) for acquiring geometric data of the blood vessel,
- a processing unit for determining a puncture location (124) of the blood vessel (102),
- an actuator (114) for moving and aligning the cannula (117) and for

inserting the distal end (122) of the cannula into the blood vessel at the puncture location.

15. The system according to claim 13, further comprising a movement control module (112) being adapted to process data provided by the acquisition system (108) during insertion of the cannula in order to control the cannula's movement during insertion into the tissue of the person or animal.

16. The system according to claim 13, further comprising movable fastening means for fixing the cannula if the cannula is inserted into the blood vessel (102), which movable fastening means are movable with respect to an inserting direction (120) and at least with respect to a second direction (118) being substantially non-parallel to the inserting direction, the fastening means being further adapted to dissociate the cannula and the puncture system being removable from the body part, leaving the cannula's distal end inserted into the blood vessel.

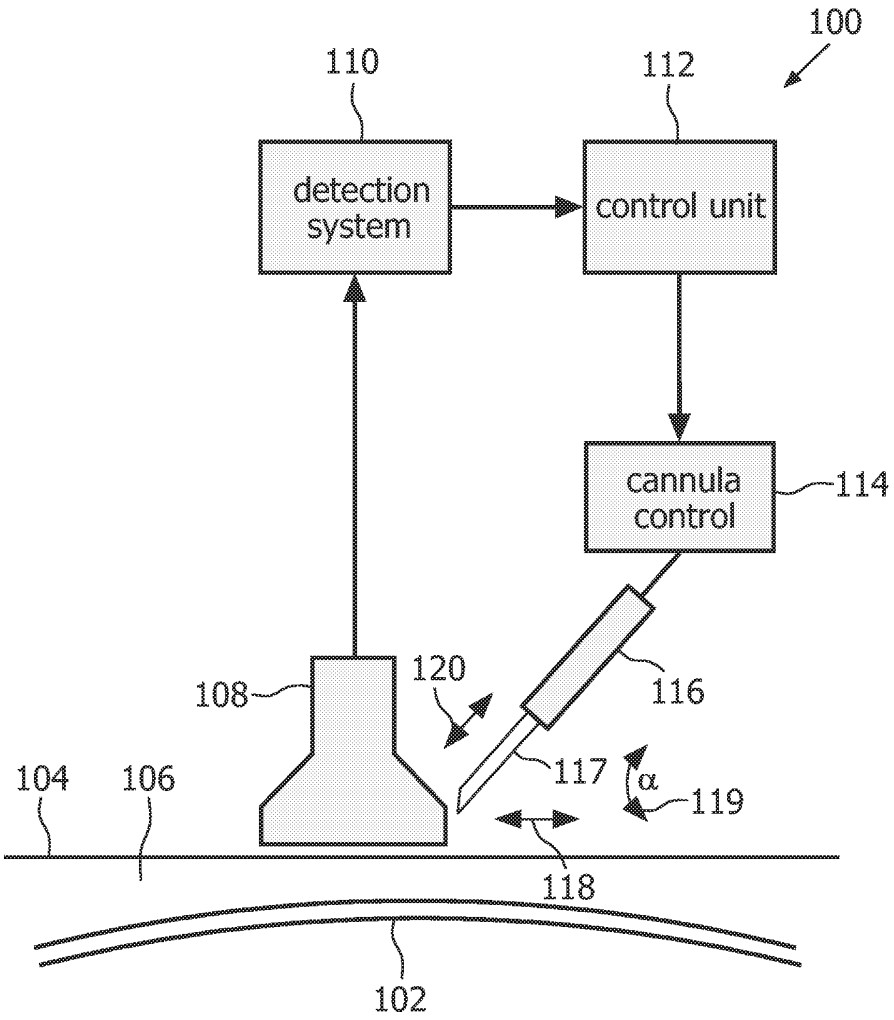
100
110
112
detection system
control unit
cannula control
114
108
120
116
117
α
119
104
106
118
102

FIG. 1

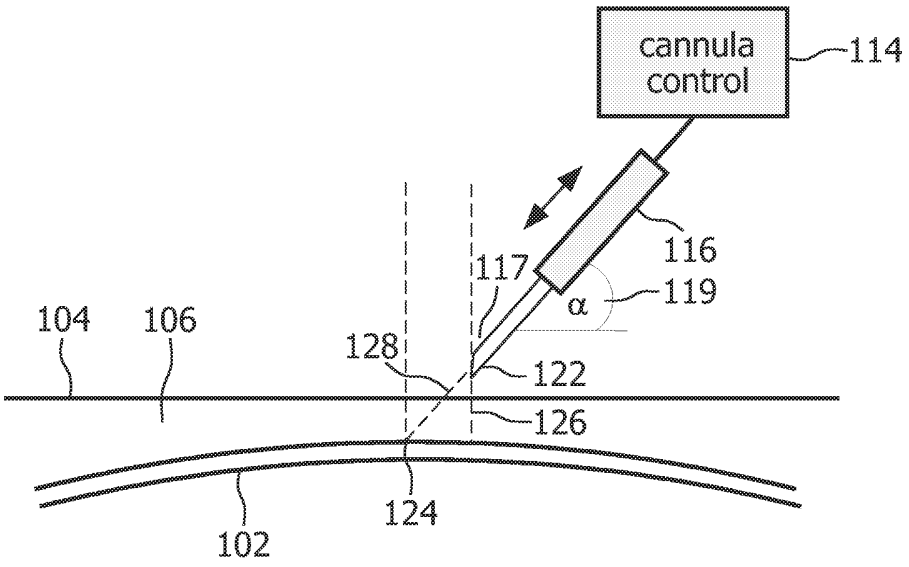
cannula control
114
116
117
119
α
104
106
128
122
126
124
102

FIG. 2

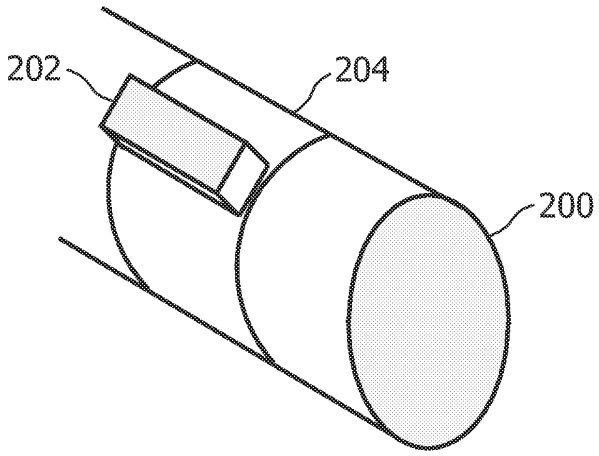
202
204
200

FIG. 3

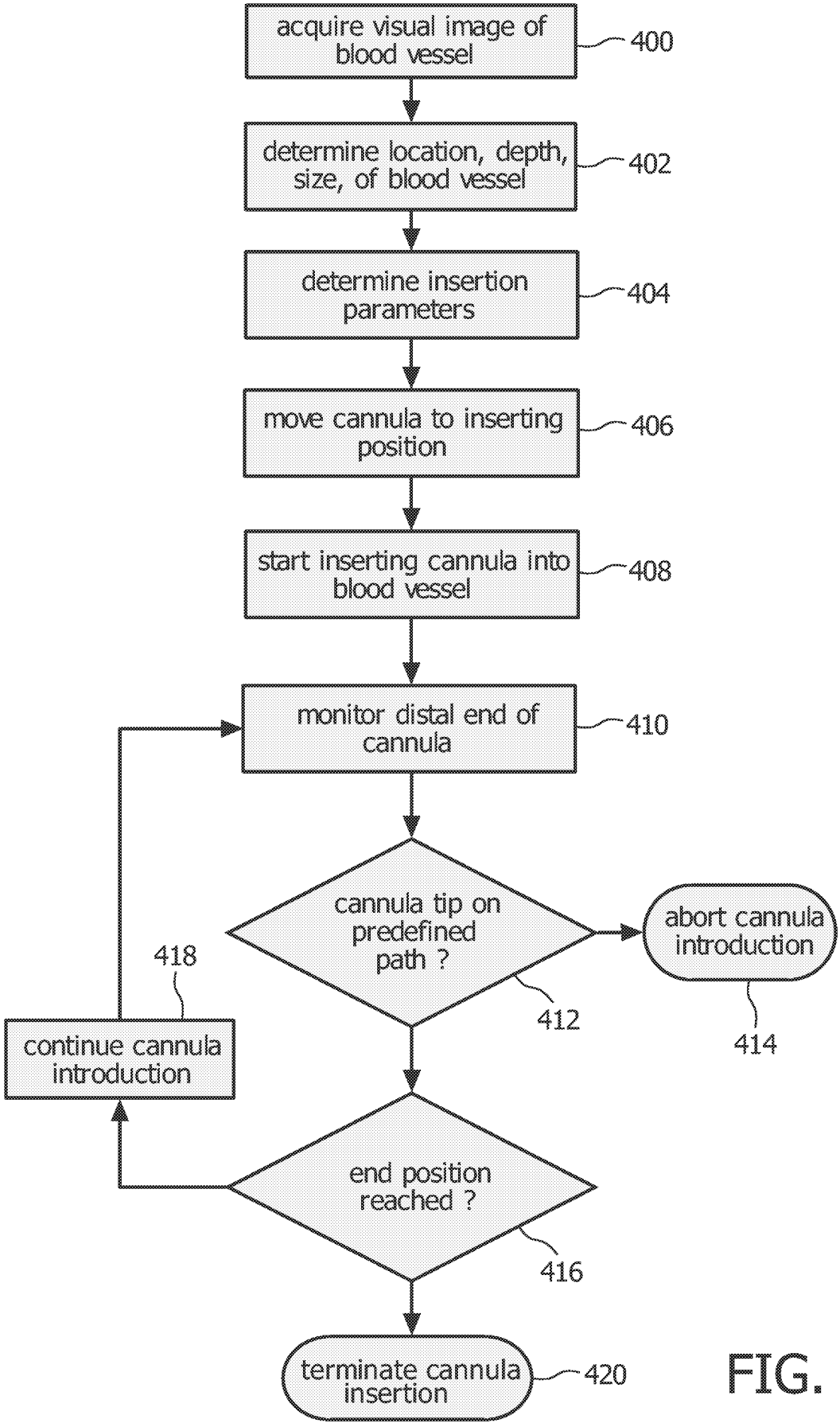
acquire visual image of blood vessel
400
determine location, depth, size, of blood vessel
402
determine insertion parameters
404
move cannula to inserting position
406
start inserting cannula into blood vessel
408
monitor distal end of cannula
410
cannula tip on predefined path ?
412
abort cannula introduction
414
418
continue cannula introduction
end position reached ?
416
terminate cannula insertion
420

FIG. 4

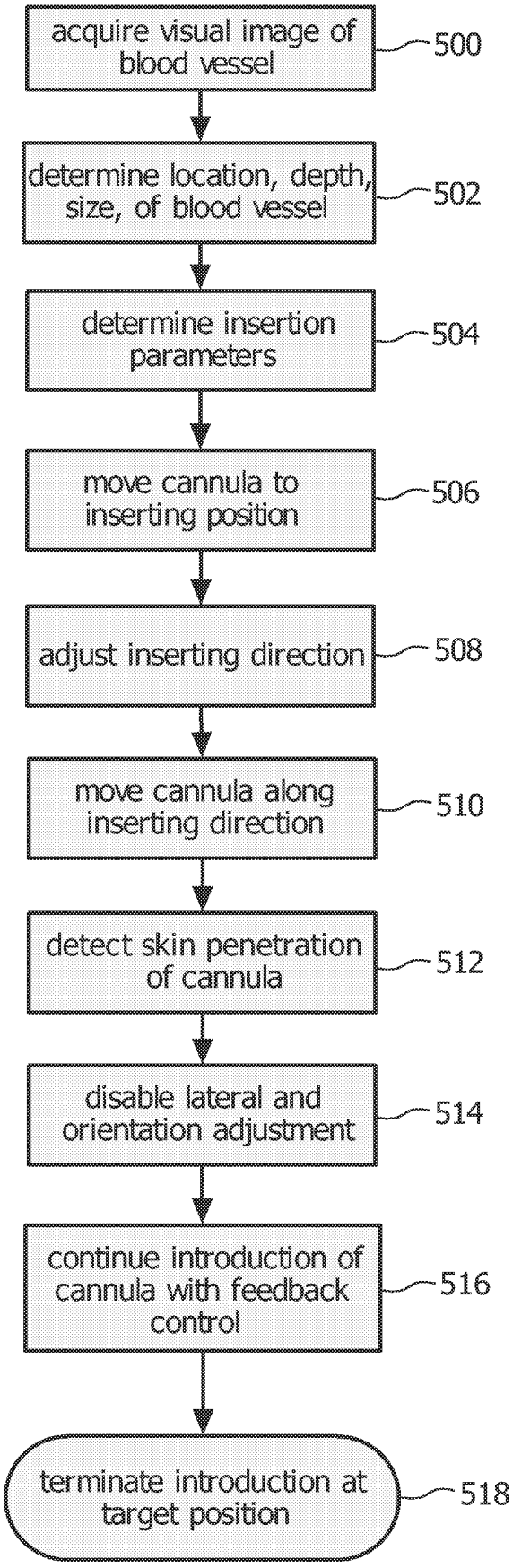
acquire visual image of blood vessel
500
determine location, depth, size, of blood vessel
502
determine insertion parameters
504
move cannula to inserting position
506
adjust inserting direction
508
move cannula along inserting direction
510
detect skin penetration of cannula
512
disable lateral and orientation adjustment
514
continue introduction of cannula with feedback control
516
terminate introduction at target position
518

FIG. 5