Oct. 15, 1963 A. T. SCHOFIELD 3,106,737

CYLINDRICAL BRUSH

Filed Sept. 5, 1961

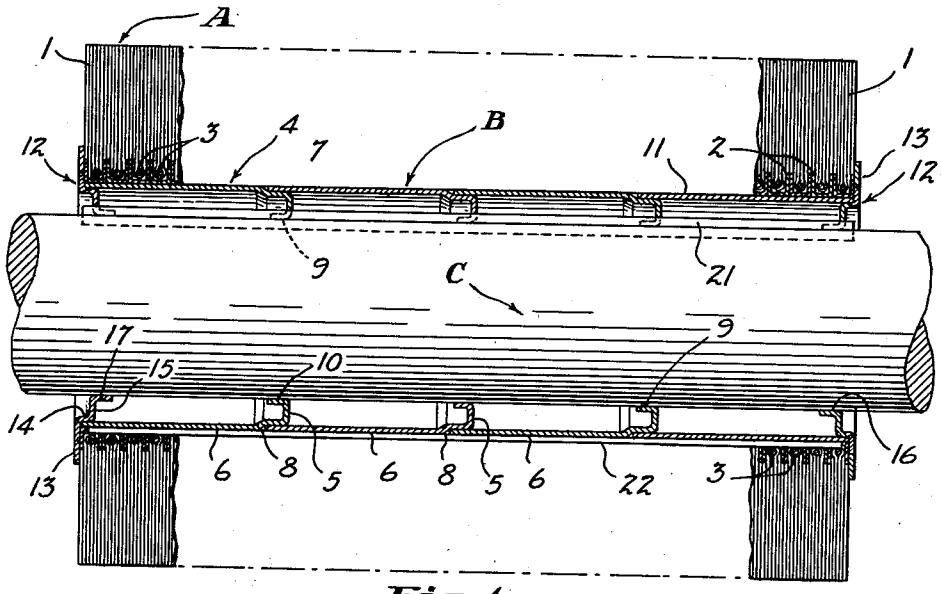

Fig. 1

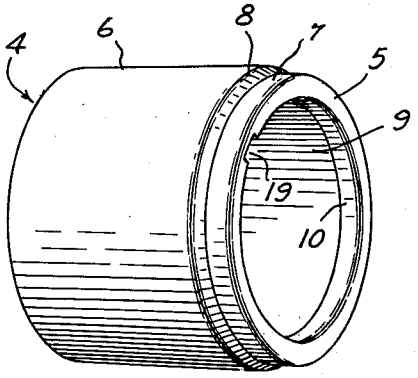

Fig. 3

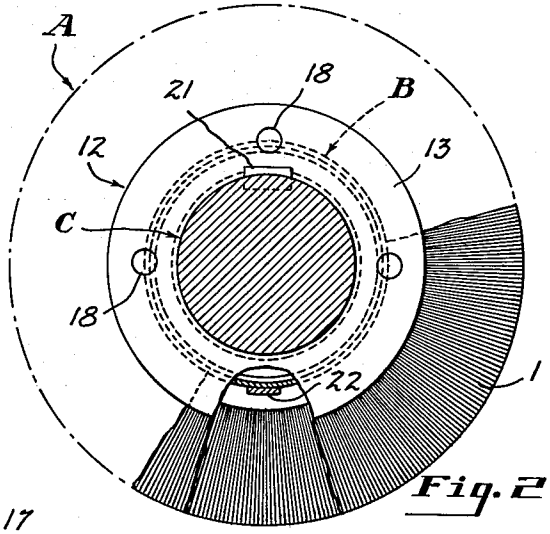

Fig. 2

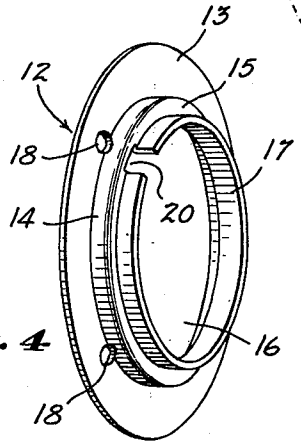

Fig. 4

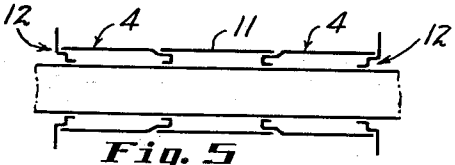

Fig. 5

INVENTOR

Arthur T. Schofield

BY McCoy, Greene & LeGrotenluis

ATTORNEYS

United States Patent Office 3,106,737 Patented Oct. 15, 1963

3,106,737

CYLINDRICAL BRUSH

Arthur T. Schofield, Brecksville, Ohio, assignor to The Manufacturers Brush Company, Cleveland, Ohio, a corporation of Ohio

Filed Sept. 5, 1961, Ser. No. 135,957
8 Claims. (Cl. 15—181)

This invention relates to cylindrical brushes of the power driven type having an elongated drum-shaped metal hub or core that centers the brush with respect to the shaft and rigidly supports the brush on the shaft.

Heavy duty power driven brushes are often provided with annular bases which are of an internal diameter considerably greater than that of the shaft upon which the brush is to be mounted and in order to rigidly support such a brush on its shaft, the brush is mounted upon a drum-shaped core which provides a rigid connection between the brush and shaft. Since such cores as heretofore constructed have been relatively expensive it has been common practice to mount new brushes on the old cores.

The present invention provides a brush core which is rigid and durable but which can be manufacturtd at a cost such that the brush manufacturer can supply each brush with a new permanently attached core at a price which makes it economically undesirable to utilize used cores.

The cores of the present invention are formed of sheet metal cup sections so constructed that they may be readily joined end to end to build a core of any desired length. The core has open ends that receive shaft engaging plates that have peripheral brush retaining portions and inner annular portions that fit within the open ends of the core and that have central shaft receiving openings, the core being supported intermediate its ends by one or more shaft engaging members formed integrally with one or more of the core sections.

Reference should be had to the accompanying drawings forming part of this specification in which:

FIGURE 1 is a longitudinal sectional view showing a brush embodying the invention mounted upon a supporting shaft;

FIG. 2 is an end elevation of the brush shown in FIG. 1 with parts broken away and shown in section;

FIG. 3 is a perspective view of one of the core sections;

FIG. 4 is a perspective view of one of the core supporting and brush retaining end plates; and

FIG. 5 is a diagrammatic view showing an alternative arrangement of the core sections.

The brush assembly as shown in FIG. 1 comprises a brush body A, an elongated sectional core B and a supporting shaft C. The core B provides a rigid support for the brush body A, centers the brush body with respect to the shaft and may provide a driving connection between the shaft and brush body.

The brush body A comprises brush materials 1 secured to an internally cylindrical base 2 by suitable means. The base 2 may be composed of closely spaced channel shaped convolutions that may be formed by closely spaced sheet metal rings or by a helically wound sheet metal channel, either construction being common in the brush art and the brush materials are secured to the base 2 by suitable means such as wires 3.

The core B is formed of tubular sections joined end to end. At least one section 4 is provided with an integral inwardly extending shaft-engaging rim portion 5 at one end thereof. The section 4 has a body portion 6 that is externally and internally cylindrical from one end of the section to adjacent the opposite end thereof.

At said opposite end, the section 4 has a short cylindrical shoulder portion 7 that is coaxial with the body portion 6, that has an external diameter corresponding to the internal diameter of the body portion 6 and that provides a shoulder 8 of a depth corresponding to the thickness of the body portion 6. The shaft engaging rim portion 5 projects radially inwardly from the reduced end portion 7 and is provided with a central opening 9 that fits upon the supporting shaft. An axially extending flange 10 may form the wall of the shaft-receiving opening. When the shaft is cylindrical as herein shown the flange 10 is cylindrical and coaxial with the portions 6 and 7 of the section.

A plurality of identical sections 4 are usually employed and these sections may be joined end to end with the small end of one telescopically fitting into the large open end of another as shown in FIG. 1. The large end of one of the sections 4 will be disposed at one end of the core as shown in FIG. 1 and a single cylindrical section 11 of the same internal and external diameter as the body portions 6 of the section 4 is provided. If the core B is composed of three or more sections the open ended cylindrical section 11 may be positioned either at the end of the core or between sections 4, as shown in FIG. 5, and in either case the opposite ends of the core are open and of the same internal and external diameter.

The sections of the core may be permanently joined together by any suitable means, metallic arc welding being a convenient method, since the circumferential recesses between the shoulders and the end edges of adjacent sections provide channels to receive electrode metal.

The sections 4 are preferably seamless and may be formed by conventional methods utilizing standard metal forming apparatus. The tubular walls and central openings of the sections may have various configurations.

The open ended cylindrical section 11 may be cut from tube stock of the same diameter and wall thickness as the body portion 6 of the section 4 and may be of any desired length. It will be apparent that by employing the required number of the sections 4 and one open ended section 11 of the required length a core of uniform external diameter and of any specified length greater than the length of a single section 4 may be built and that the core will be of the same internal and external diameter at opposite ends.

For bracing the ends of the core and for securing the brush body A in place a retaining plate 12 is provided at each end of the core. Each plate 12 is provided with a peripheral portion 13 that engages an end of the core and projects radially outwardly from the core to retain the brush body on the core. Each plate 12 has a cylindrical inwardly projecting shoulder 14 that fits within an end of the core and a central portion 15 extending radially inwardly from the shoulder 14 and provided with a central shaft receiving opening 16. An axially extending shaft engaging flange 17 may form the wall of the opening 16. When the supporting shaft is cylindrical the flange 17 will be cylindrical and coaxial with the shoulder 14.

The peripheral portions 13 of the plates 12 may be provided with circumferentially spaced holes 18 that open to end edge portions of the core and to the metal base 2 of the brush body to facilitate attachment of the plates to the core and to the brush base by suitable means such as metallic arc welding. If the brush is to be driven by its supporting shaft, axially alined notches 19 may be cut in the inwardly projecting portion 5 of the sections 4 and notches 20 may be cut in the inner portion 15 of the end plates 12 that are axially alined with the notches 19 to receive a key 21 carried by the shaft C. The inwardly extending rim portions 5, the sections 4 and the

inner portions 15 of the end plates 12 are preferably flat and at right angles to the axis of the core so as to provide spaced rigid supports for the core and the axially extending flanges 10 and 17 that define the shaft openings engage with the key 21 to provide a strong driving connection between the core and shaft, the brush body A may be held against circumferential movements with respect to the core, not only by the welded connection to the base 2, but also by one or more axial keys 22 attached to the core.

It is to be understood that in accordance with the provisions of the patent statutes, variations and modifications of the specific devices herein shown and described may be made without departing from the spirit of the invention.

What I claim is:

1. The combination with a brush having a tubular base, of a tubular core that fits within said base and that comprises a plurality of tubular sections joined end to end, one of said sections having a body portion that is of substantially uniform external and internal diameter from an open end thereof to adjacent the opposite end and having at said opposite end a reduced portion forming a shoulder coaxial with said body portion and of an external diameter corresponding to the internal diameter of its body portion and an integral shaft engaging rim portion extending radially inwardly from its reduced portion and having a central shaft receiving opening, an open ended tubular section of the same external and internal diameter from end to end as said body portion and fitting upon and joined to the shoulder of at least one adjacent section, said sections being joined together to dispose open ends thereof at the ends of the core and shaft engaging brush retaining end plates secured to opposite ends of said core, each of said plates having a shoulder that fits within the open ends of the sections at the ends of the core and a central shaft receiving opening.

2. The combination as defined in claim 1 in which the shaft receiving openings of the core and end plates are circular and are provided with axially alined key receiving notches.

3. The combination with a brush having a tubular base, of a tubular core that fits within said base and that comprises a plurality of substantially identical tubular sections, each having a body portion that is of substantially uniform external and internal diameter from an open end thereof to near the opposite end and that has at said opposite end a reduced portion forming a shoulder coaxial with said body portion and of an external diameter corresponding to the internal diameter of said body portion at its open end, an integral shaft engaging rim portion extending radially inwardly from said reduced portion and having a central shaft receiving opening, an open ended tubular section of the same internal and external diameter from end to end as the body portions of said identical sections and fitting upon and joined to the reduced end portion of at least one of said identical sections, said sections being joined together to dispose open ends thereof at the ends of the core and shaft engaging brush retaining end plates secured to opposite ends of said core, each of said plates having a shoulder of the same diameter as the said shoulders at the ends of said substantially identical tubular sections that fits within an end of said core and a central shaft receiving opening.

4. The combination as defined in claim 3 in which the shaft engaging portions of the core sections and of the shaft engaging end plates have axially alined key receiving notches opening to their shaft receiving openings.

5. The combination as defined in claim 3 in which the shaft engaging rim portions have tubular axially extending shaft engaging flanges.

6. The combination as defined in claim 3 in which the open ended tubular section is disposed at one end of the core.

7. The combination as defined in claim 3 in which the open ended tubular section is disposed between two of the identical sections and fits upon and is joined to the reduced ends of two of the identical sections.

8. A brush core comprising a series of tubular sections joined end to end, one only of said sections having open ends and being of the same external and internal diameter throughout its length, the other of said sections each having an open end a tubular body portion of the same external and internal diameter as said first mentioned section and extending from its open end to near its opposite end, a short portion of reduced diameter at said opposite end which is of an external diameter to fit within the open end of an identical section or within either open end of said first mentioned section and an integral rim portion extending inwardly from said reduced end and having a central shaft receiving opening, said tubular sections being joined end to end with the reduced end of one section fitting within and joined to the end of the abutting section and with all of said end portions of reduced diameter and said integral rim portions spaced inwardly from the ends of the core.

References Cited in the file of this patent

UNITED STATES PATENTS

602,183	Sutcliffe	Apr. 12, 1898
2,935,756	Peterson	May 10, 1960

FOREIGN PATENTS

432,784	Italy	Mar. 26, 1948