United States Patent [19]

Katcher

[11] **3,785,150**

[45] **Jan. 15, 1974**

[54] **INTEGRAL THRUST NEUTRALIZER FOR ROCKET ENGINES**

[75] Inventor: **Emanuel E. Katcher,** Washington, D.C.

[73] Assignee: **The United States of America as represented by the Secretary of the Navy,** Washington, D.C.

[22] Filed: **Jan. 10, 1973**

[21] Appl. No.: **322,348**

[52] **U.S. Cl.**..... **60/229,** 60/256, 60/39.09 R, 60/39.82 E, 102/49.7

[51] **Int. Cl.**..... **F02k 9/04**

[58] **Field of Search**..... 60/229, 234, 253–256, 60/39.82 E, 39.09 R, 39.1, 39.47, 223; 102/49.6, 49.7, 70 R; 89/1.812

[56] **References Cited**

UNITED STATES PATENTS

3,529,418 9/1970 Puckett et al..... 60/256 X

3,423,931 1/1969 Schwarz et al..... 60/39.47

Primary Examiner—Carlton R. Croyle
Assistant Examiner—Robert E. Garrett
Attorney—R. S. Sciascia

[57] **ABSTRACT**

Thrust-neutralizing means for a missile having a rocket motor having igniter means, said neutralizing means compressing a set of blowout ports in the casing of said igniter and blowout discs in said ports, a similarly spaced set of ports in the neck of the combustion chamber of the rocket motor, and a similarly spaced set of ports in the body of the means which couples the motor to the missile. The igniter means is rotatable so that all sets of ports can be aligned in the "safe" position. The ports in the body of the coupling means is forwardly angled so that any gas discharge thru these ports provides backward thrust for the missile.

6 Claims, 2 Drawing Figures

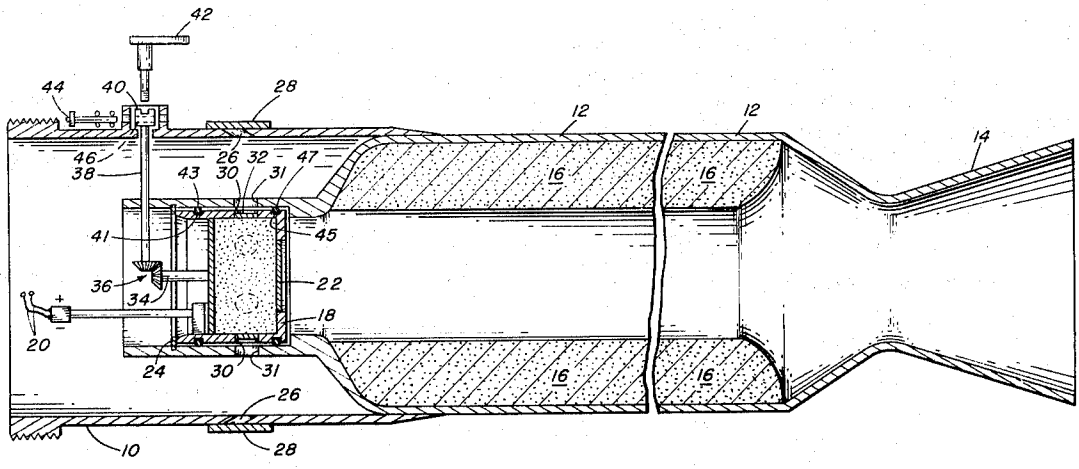

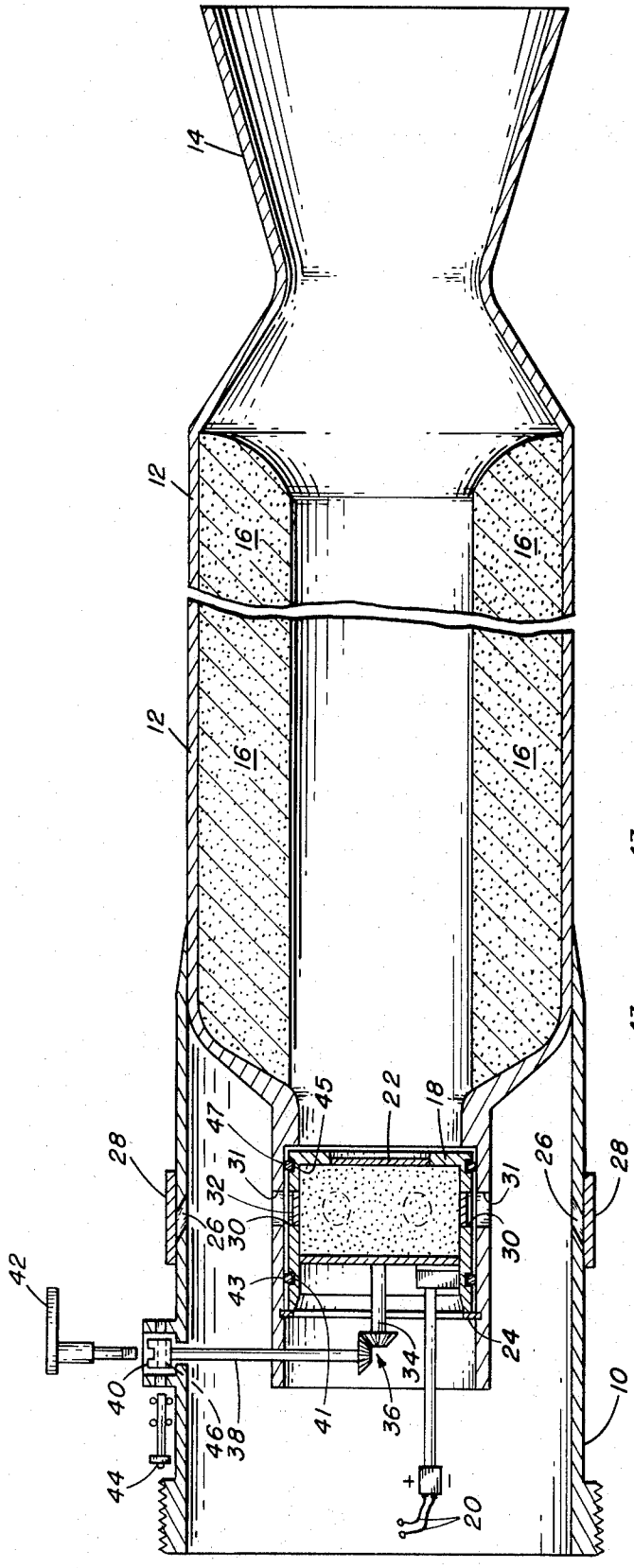
14
12
16
12
16
16
45
22
18
47
31
32
30
28
26
43
42
40
46
38
44
41
36
34
24
10
20
+
-

FIG. 1

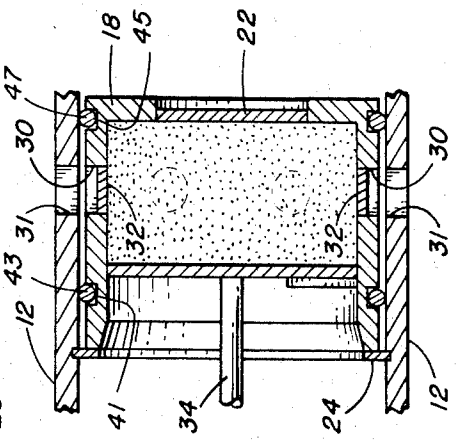
18
45
22
47
30
31
32
43
12
41
34
24
12

FIG. 2

INTEGRAL THRUST NEUTRALIZER FOR ROCKET ENGINES

STATEMENT OF GOVERNMENT INTEREST

The invention described herein may be manufactured and used by or for the Government of the United States of America for governmental purposes without the payment of any royalities thereon or therefor.

BACKGROUND OF THE INVENTION

This invention relates to means for neutralizing the thrust of a gas-propelled missile and especially to such neutralization for safety purposes when the missile is being stored or shipped.

A danger exists in missiles having rocket propulsion units that the igniter or propellant will be accidentally ignited and cause the missile to be propelled, thereby causing damage. Such accidental ignition can be caused by electrostatic energy, electromagnetic energy, stray voltages, lightning transients, personnel errors, inadequate circuit design, faulty electrical components, fire or heat, etc.

It is therefore desirable that the forward thrust of the gases expelled from the nozzle in the rear of the missile be neutralized either completely or to the extent that not enough thrust remains to propel the weight of the rocket forward.

Present methods of obtaining thrust neutralization include:

1. Shipping and storing the rocket without an igniter. This means that personnel have to be ever vigilant to see that no errors occur.

2. Providing a thrust neutralizer attachment that is externally placed on the rocket nozzle and must be removed for firing. These designs are usually bulky and heavy, causing personnel to try to avoid their use.

3. Providing blowout discs at both igniter and nozzle locations. Full thrust is obtained by installing a solid metal part into the igniter location prior to operational use, a time-consuming job.

SUMMARY OF THE INVENTION

The objects and advantages of the invention are accomplished by providing the internal igniter casing and the missile casing with matching ports, the missile ports being angled forward so that gas issuing from the missile ports gives a backward thrust to the missile, thereby tending to neutralize the forward thrust provided by nozzle gases. The igniter can be rotated so that its ports are in alignment with the missile ports for safety. The igniter ports are closed with blowout discs which are ejected when the igniter is ignited, thereby allowing the internal gases to escape thru the ports.

An object of the invention is to neutralize or lessen the thrust provided by the nozzle gases of a rocket missile.

Another object is to neutralize or lessen by internal means the thrust provided by the nozzle gases of a rocket missile.

OBJECT CLAUSE

Other objects, advantages and novel features of the present invention will become apparent from the following detailed description of the invention when considered in conjunction with the accompanying drawing.

BRIEF DESCRIPTION OF THE DRAWING

FIG. 1 is a longitudinal cross-section of the aft end of a rocket missile in accordance with the present invention.

FIG. 2 is a side view of the igniter used with this invention.

DETAILED DESCRIPTION

FIG. 1 shows schematically the rear end of a rocket missile. Welded to the tubular coupling section **10** of the rocket motor is a rather bottle-shaped combustion chamber **12** with a nozzle **14** attached at its rear. A hollow tube of propellant charge **16** fits inside the wall of the combustion chamber **12.** At the forward end, the combustion chamber **12** is narrowed into a neck in which a cylindrical igniter unit **18** is placed.

FIG. 2 provides a more detailed partly sectional view of the igniter section of the rocket motor. The igniter **18** is a unit with a cylindrical casing inside of which explosive squibs and igniter main charge are placed which are fired by an electrical signal. The signal is brought in by a pair of wires **20.** The igniter has a scored blowout disc **22** in its side which is adjacent to the combustion chamber **12.** Igniting the squibs generates hot gases which blow out the igniter rear disc **22** and ignite the propellant charge **16.** A lock ring **24** is placed in front of the igniter **18.**

A plurality of gas-discharge ports **26** are spaced around the body of the coupling section **10** and a light access strap **28** is tightened around the ports **26.** The gas-discharge ports **26** are angled in the forward direction so that any gas discharging from the ports **26** will discharge in the forward direction.

The neck of the combustion chamber **12** also is formed with a plurality of gas-discharge ports **31.** This set of ports is spaced the same as the igniter blowout ports **30** so that the latter can be aligned with the combustion-chamber ports **31.**

The igniter casing has a plurality of holes or blowout ports **30** drilled thru it, the number being equal to the number of gas discharge, or body blowout, ports **26.** In each igniter blowout port **30** is placed a plug comprising a scored metallic disc **32.** All blowout discs may be manufactured from a metal such as copper, for example.

The igniter casing is grooved **41** and **45** to contain two O-rings **43** and **47** which seal the space between the casing and the neck of the combustion chamber so that no gas may discharge forwardly or backwardly thru the neck but must go thru the gas-discharge ports after the blowout discs fail. If the pressure builds up sufficiently so that it cannot be relieved thru the gas discharge ports, the rear blowout disc **22** fails and some gas is discharged into the hollow portion of the combustion chamber.

The igniter **18** is rotatable by means of a central shaft **34,** the end of which is coupled to a radial shaft **38** by means of gearing **36.** The radial shaft **38** extends outside the motor body **10** to a female key fitting **40.** The key fitting **40** can be turned, thereby rotating the igniter casing, by means of a turn key **42.**

To place the igniter in its safe position, the igniter is rotated so that its blowout ports **30** are aligned with the body gas discharge ports **26** and the combustion chamber ports **31.** The operator who is wielding the turn key **42** can observe the aligning of the ports by lifting the

access strap 28 from one of the ports 26 and looking thru the port. Then, if the igniter squibs ignite by accident, the gas which is generated blows out the blowout discs 32 and goes thru the igniter blowout ports 30 and the body gas discharge ports 26. Since the gas is propelled at a forward angle to the body of the missile, a thrust having a backward force component is generated. This backward force component acts to diminish the forward thrust of the gases which exit to the rear of the rocket motor thru the end of the nozzle 14.

When it is desired to arm the missile, the igniter is rotated so that its blowout ports 30 do not align with the body blowout ports 26. When ignited, the igniter gases cannot blow out the igniter blowout discs 32 but can and do blow out the rear igniter blowout disc 22, allowing the hot igniter gases to ignite the propellant charge 16.

A sectional view of the igniter 18 is shown in FIG. 3. This shows the blowout discs and their locations in slightly greater detail.

A futher safety feature is provided by a safety pin 44 which can be fitted into a bore 46 in the female key fitting 40 to lock the shaft 38 and therefore the igniter 18 in the safe position, thus positively preventing igniter rotation.

GENERAL CLAUSE

Obviously, many modifications and variations of the present invention are possible in light of the above teachings. It is therefore to be understood that, within the scope of the appended claims, the invention may be practiced otherwise than as specifically described.

What is claimed is:

1. Thrust-neutralizing means for a rearward-discharging rocket motor which is used to propel a missile comprising, in combination:

combustion chamber means having a neck formed with spaced ports around the periphery of said neck;

coupling means attached to the front of said combustion chamber means for attaching said rocket motor to the main body of said missile,

said coupling means being formed with a plurality of gas-discharge ports spaced around its periphery, said ports being angled so that gas discharging thru said ports travels toward the front end of the rocket motor thereby imparting a rearward thrust to the missile;

igniter means located inside the neck of said combustion-chamber means and having a casing formed with a plurality of blowout ports which are equal to the number of said gas-discharge ports and to the number of said combustion-chamber ports and which are correspondingly spaced with said latter two sets of ports,

said igniter means having a plurality of blowout discs, each being placed in a different blowout port so as to seal the port,

said igniter means also having a central shaft whereby the igniter means may be rotated into alignment with said combustion-chamber ports and said gas-discharge ports; and

means for rotating said igniter means from the outside of said coupling means.

2. Thrust-neutralizing means as in claim 1, said combustion-chamber neck and said igniter casing being cylindrical in shape and coaxial with each other.

3. Thrust-neutralizing means as in claim 1, wherein said igniter means includes gas-sealing means for preventing the discharge of gas forwardly thru the neck of said combustion-chamber means.

4. Thrust-neutralizing means as in claim 1, wherein said igniter means includes gas-sealing means for preventing the discharge of gas rearwardly thru said combustion-chamber means.

5. Thrust-neutralizing means as in claim 1, wherein said means for rotating said igniter means shaft means connected to said igniter means and key means for turning said shaft means.

6. Thrust-neutralizing means as in claim 5, further including locking means for locking said shaft means in a predetermined position.

* * * * *