BEST AVAILABLE COPY

L. C. NICHOLSON.

PROTECTING APPARATUS FOR INSULATORS.

APPLICATION FILED SEPT. 10, 1909.

966,584. Patented Aug. 9, 1910.

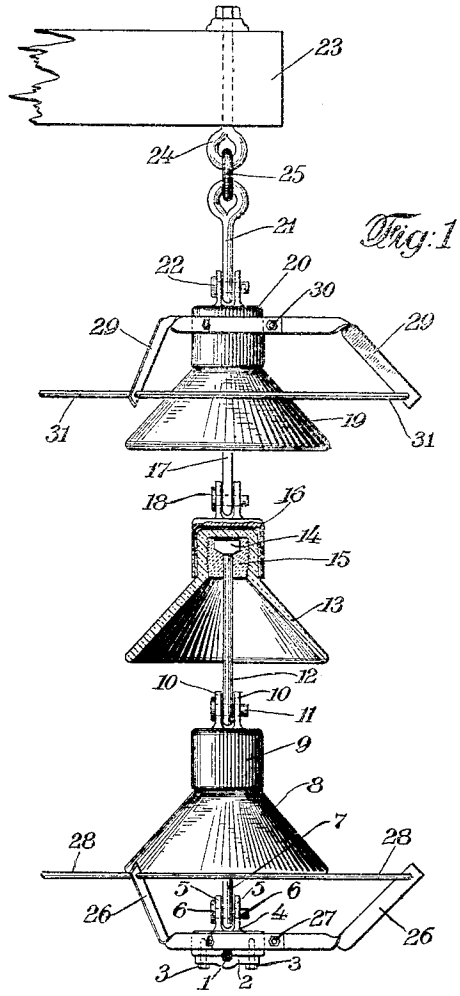

Fig: 1

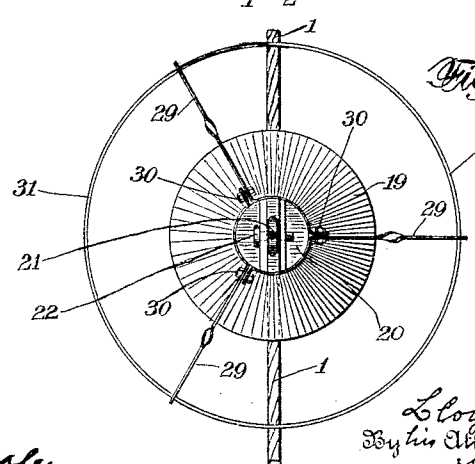

Fig: 2

Witnesses:
Geo. M. Harvey
John O. Gempler

Inventor
Lloyd C. Nicholson
By his Attorneys
Kenyon & Kenyon

THE NORRIS PETERS CO., WASHINGTON, D. C.

UNITED STATES PATENT OFFICE.

LLOYD C. NICHOLSON, OF BUFFALO, NEW YORK.

PROTECTING APPARATUS FOR INSULATORS.

966,584. Specification of Letters Patent. **Patented Aug. 9, 1910.**

Application filed September 10, 1909. Serial No. 517,160.

To all whom it may concern:

Be it known that I, LLOYD C. NICHOLSON, a citizen of the United States, and a resident of Buffalo, county of Erie, State of New York, have invented certain new and useful Improvements in Protecting Apparatus for Insulators, of which the following is a specification.

My invention relates to improvements in protecting apparatus for insulators, and is more especially designed to prevent injury to high potential insulators of the suspension type due to the arcs of the power current which follow flash-overs.

In ordinary high potential electric systems when the voltage on the line conductor rises abnormally, due to lightning or other causes, a flash-over current is apt to take place over the surface of the insulator to the supporting pin and thence to the earth. If this discharge current is of sufficient value to overcome the dielectric strength of the medium and break it down, an arc will follow, which arc is due to the power current or voltage of the line. That is, the actual discharge due to the high voltage of the lightning is of very short duration, but the heavy discharge which follows is due to the flow of the power current which follows the flash-over when the dielectric strength of the air has been broken down. The insulators used in such high potential electric systems are usually of glass or porcelain, which materials are very refractory and easily injured by heat. Therefore, when such power arcs occur over the skirts of the insulator the heat is apt to injure or wholly destroy it. To prevent such destruction I place an electrode connected with the earth so that when a flash-over and power arc occur thereon the whole arc is diverted away from the insulator to the electrode so that it will not injure the insulator.

One object of my invention is to accomplish the above advantages in a suspension type of insulator, and to provide an arrangement which is simple and economical in its manufacture, and which is readily put in place, and which may be adapted to any form of insulator.

Further objects, features and advantages will more clearly appear from the detailed description given below, taken in connection with the accompanying drawing which forms a part of this specification.

In the drawing Figure 1 represents a side view of a suspension type of insulator embodying one form of my improvements and showing one of the skirts in section. Fig. 2 is a plan view of the apparatus shown in Fig. 1, the supporting arm being omitted.

Referring to the drawing, 1 represents a high potential conductor secured to the insulator by means of a clamp 2 and bolts 3, the bolts 3 passing into a circular metallic block 4. The block 4 is provided with ears 5, through which pass a pivot pin 6 for pivotally mounting the block 4 to the suspension rod 7. The rod 7 is secured within the skirt 8, and the skirt 8 is secured within a metal cup 9 which is provided with ears 10, and pivot pin 11 for pivotally securing the same to the suspension rod 12. In a similar manner the rod 12 is secured within the skirt 13 by means of a head 14 and cement 15, and the top of the skirt 13 is secured to a similar metallic cup 16 which is also pivotally mounted on the suspension rod 17 by means of pivot pin 18. The rod 17 is similarly mounted within the skirt 19, and skirt 19 is similarly secured within the metallic cup 20. The cup 20 is similarly pivoted to a suspension rod 21 by means of a pivot pin 22, and the rod 21 is secured to the supporting arm 23 by means of a bolt 24 and ring 25.

Clamped about the metallic body 4 by means of bolts 27 is a plurality of arms 26 extending outwardly and upwardly and supporting the metallic guard ring 28 which forms an electrode for the power arc. In a similar manner there are clamped about the metallic cup 20 by means of bolts 30, a plurality of arms 29 which extend outwardly and downwardly and support the guard ring 31 which forms an upper electrode for the power arc. The guard ring 28 is therefore arranged opposite the skirt 8, and spaced therefrom outside of the insulator parts. In a similar manner the guard ring 31 is arranged opposite the upper skirt 19, and is spaced therefrom so that a straight line drawn between the electrodes 28 and 31, lies wholly outside of the insulator parts. The guard ring 28 is electrically connected with the conductor 1 by means of the metallic arms 26 and the metallic body 4, and the guard ring 31 is electrically connected to earth by means of arms 29, metallic cup 20, and the supporting rods or any other suitable connections.

When an abnormal voltage exists on the main line of conductor 1, the same voltage

exists upon the electrode 28 and the suspending rod 7. This tends to increase the leakage currents over the surface of the insulator, and if the voltage becomes large enough, the dielectric strength of the intervening medium will be broken down, and a heavy discharge will take place over the surface of the various skirts 13, and through the rods 12, 17 and 21 to earth. This heavy discharge which follows is, however, due to the power current which now flows from the conductor to the ground over the path which has been broken down because of the initial high voltage to which it has been subjected. The discharge immediately forms into an arc, which takes the path closely adjacent to the surface of the various skirts 8, 13 and 19. This arc passing directly over the skirts of the insulator, and flaring in all directions, causes a heating of the skirts, and therefore often injures or wholly destroys the same. However, when the guard rings 28 and 31 are present, the arc immediately shifts to the shorter path along the perpendicular straight line between these guard rings. The arc reaches the guard rings because in flaring it comes into contact with them, after which time it will no longer pass over an irregular path over the surfaces of the skirts for the reason that the straight line path is more favorable. The arc is thereby diverted away from the insulator skirts, so that it produces no injurious effect thereupon, and is prevented from doing damage thereto.

In order that the presence of the guard rings 28 and 31 may not cut down the resistance offered by the insulator, or increase the flash-over liability thereof, the initial resistance of the path formed by the perpendicular straight line between the guard rings is greater than the initial resistance over the surfaces of the skirts of the insulator. By the term "initial resistance" I mean to comprehend the tendency of the air gaps to resist the discharge of current, and not break down, as well as the tendency of the conductors to resist the passage of current. The guard rings or electrodes 28 and 31 are therefore so situated that the initial resistance through the air directly from one to the other through the surrounding medium, is so great that the initial discharge will not pass directly from one to the other, but will take place over the surfaces of the skirts of the insulator to the metallic cup 20, and thus to earth. However, immediately the arc has been formed, it flares out and takes the path directly from the electrode 28 to the electrode 31 through the surrounding medium, so that the arc is drawn away from the skirts of the insulator, and thus prevented from doing damage thereto.

From the above it will be apparent that I have provided an exceptionally efficient and simple means for protecting high potential insulators of the suspension type from injuries due to power arcs following flashovers. It is possible, however, that my improvements may be found advantageous in other types of insulators, and I therefore do not desire to be limited to any particular form of insulator. Also although I have described my improvements in great detail, nevertheless I do not desire to be limited thereto except as hereinafter claimed, but

Having fully and clearly described my invention, what I claim as new and desire to secure by Letters Patent, is:

1. In an arrangement of the class described, an electric conductor, a suspension type insulator therefor, and means for diverting the arc away from the insulator when a flashover and arc occur thereon.

2. In an arrangement of the class described, an electric conductor, a suspension type insulator therefor having a plurality of skirts, and an electrode spaced from the insulator and arranged to divert the power arc away from the insulator when a flashover occurs on the insulator.

3. In an arrangement of the class described, an electric conductor, a suspension type insulator therefor having a plurality of skirts, an electrode electrically connected with the conductor and spaced from lower skirt of the insulator, and an electrode opposite the upper skirt of the insulator and connected with earth for diverting the power arc away from the insulator when a flashover occurs thereon.

4. In an arrangement of the class described, an electric conductor, a suspension type insulator therefor having a plurality of skirts, an electrode electrically connected with the conductor and spaced from lower skirt of the insulator, and an electrode opposite the upper skirt of the insulator and connected with earth for diverting the power arc away from the insulator when a flashover occurs thereon, both of said electrodes being arranged outside of the insulator parts.

5. In an arrangement of the class described, an electric conductor, a suspension type insulator therefor having a plurality of skirts, an electrode electrically connected with the conductor and spaced from lower skirt of the insulator, and an electrode opposite the upper skirt of the insulator and connected with earth for diverting the power arc away from the insulator when a flashover occurs thereon, both of said electrodes extending substantially around their respective skirts.

6. In an arrangement of the class described, an electric conductor, a suspension type insulator therefor having a plurality of skirts, an electrode electrically connected with the conductor and spaced from lower

skirt of the insulator, and an electrode opposite the upper skirt of the insulator and connected with earth for diverting the power arc away from the insulator when a flashover occurs thereon, both of said electrodes being in the form of metallic rings extending around their respective skirts outside of the insulator parts.

7. In an arrangement of the class described, an electric conductor, a suspension type insulator therefor having a plurality of skirts, an electrode opposite the top of the insulator connected with earth, and an electrode opposite the bottom of the insulator electrically connected with the conductor, said electrodes being so arranged that a straight line between them lies outside of the insulator parts.

8. In an arrangement of the class described, a high potential conductor, an insulator therefor, an electrode opposite the top of the insulator, and an electrode opposite the bottom of the insulator arranged to divert the power arc away from the insulator when a flashover occurs on the insulator, said electrodes being so arranged that a straight line between them lies outside of the insulator parts.

9. In an arrangement of the class described, an electric conductor, a suspension type insulator therefor, an electrode opposite the top of the insulator spaced therefrom and connected with earth, and an electrode opposite the bottom of the insulator spaced therefrom and electrically connected with the conductor, and arranged to divert the power arc away from the insulator when a flashover occurs on the insulator.

10. In an arrangement of the class described, an electric conductor, a suspension type insulator therefor, an electrode opposite the top of the insulator spaced therefrom and connected with earth, and an electrode opposite the bottom of the insulator spaced therefrom and electrically connected with the conductor, said electrodes being so arranged that the initial resistance offered to a discharge between the conductor and earth is greater when the path is from one electrode to the other through the surrounding medium, than when it is over the surface of the insulator.

11. In an arrangement of the class described, an electric conductor, a suspension type insulator therefor having a plurality of skirts, an electrode extending substantially around the upper skirt and spaced therefrom and supported by metallic arms, metallic supporting members for the upper skirt of the insulator and the conductor, said arms being electrically connected to the metallic supporting member of the upper skirt, an electrode extending substantially around the lower skirt of the insulator, and spaced therefrom, metallic arms for supporting said electrode and means for clamping said arms to the metallic supporting member of the conductor to mechanically and electrically connect the electrode thereto.

12. In an arrangement of the class described, an electric conductor, an insulator therefor, an electrode spaced from the insulator and electrically connected with the conductor, and means arranged to divert the power arc away from the insulator when a flashover occurs over the surface of the insulator.

13. In an arrangement of the class described, an electric conductor, an insulator therefor, an electrode spaced from the insulator and electrically connected with the conductor, said electrode being formed in the shape of a ring spaced around the neck of the insulator, and means arranged to divert the power arc away from the insulator when a flashover occurs over the surface of the insulator.

14. In an arrangement of the class described, an electric conductor, an insulator therefor, an electrode spaced from the insulator and electrically connected with the conductor, and an electrode connected with earth arranged on the same side of the horizontal plane of the conductor as the insulator and so adjusted that the initial resistance offered to a discharge between the electrodes through the surrounding medium is greater than the "flashover" resistance of the insulator.

15. In an arrangement of the class described, an electric conductor, a high potential insulator therefor, and an electrode electrically connected with the conductor extending around the insulator near the conductor and entirely separated from the insulator to prevent heavy discharges from doing injury to the insulator.

16. In an arrangement of the class described, a conductor, a high potential insulator therefor, an electrode opposite the upper part of the insulator and spaced therefrom and an electrode opposite the lower part of the insulator, said electrodes being so arranged that the initial resistance offered to a discharge between the electrodes is greater when the path of the discharge is directly through the surrounding medium than when it is over the surface of the insulator.

17. In an arrangement of the class described, a conductor, a high potential insulator therefor, a guard ring about the top part of the insulator and a guard ring about the lower part of the insulator, both of said guard rings being spaced from the insulator outside of the insulator parts, one of said rings being electrically connected with the conductor and the other being electrically connected with earth.

18. In an arrangement of the class de-

scribed, an electric conductor, a high potential insulator therefor, and an electrode electrically connected with the conductor to prevent heavy discharges from doing injury to the insulator, said electrode being spaced from the insulator parts and extending about the insulator so that the arc following a flashover will readily attach itself thereto.

19. In an arrangement of the class described, an electric conductor, an insulator therefor, an electrode placed substantially opposite the top of the insulator and spaced therefrom to prevent heavy discharges from doing injury to the top of the insulator, and a second electrode arranged to divert the power arc away from the insulator when a flashover occurs over the surface of the insulator, said electrodes being arranged outside of the insulator parts and on the same side of the conductor as the insulator parts.

20. In an arrangement of the class described, an electric conductor, an insulator therefor, an electrode placed substantially opposite the top of the insulator and spaced therefrom and electrically connected with the conductor to prevent heavy discharges from doing injury to the top of the insulator, and a second electrode arranged to divert the power arc away from the insulator when a flashover occurs over the surface of the insulator, both of said electrodes being in the form of conducting rings extending substantially around the insulator between the top and bottom thereof.

21. In an arrangement of the class described, an electric conductor, an insulator having a plurality of skirts therefor and an electrode placed substantially opposite the top of the insulator and spaced therefrom and electrically connected with the conductor to prevent heavy discharges from doing injury to the top of the insulator, one of the skirts of said insulator having less electrostatic capacity than others and a second electrode on the same side of the conductor as the insulator and arranged to prevent said skirt from puncturing from abnormally high voltages.

22. In an arrangement of the class described, an electric conductor, a high potential insulator therefor, and a curved electrode arranged to be electrically connected with a grounded circuit formed in part by the conductor, said electrode extending around the insulator near the top thereof and a second electrode near the bottom of the insulator, said electrodes being arranged to divert the arc away from the surface of the insulator when a flashover occurs thereon.

23. In an arrangement of the class described, an electric conductor, an insulator therefor placed substantially opposite the top part of the insulator and a second electrode placed substantially opposite the bottom part of the insulator, one of said electrodes being connected with earth and the other with the conductor so as to form part of a grounded circuit when a flashover occurs over the surface of the insulator.

24. In an arrangement of the class described, an electric conductor, an insulator therefor placed substantially opposite the top part of the insulator and spaced therefrom and a second electrode placed substantially opposite the bottom part of the insulator and spaced therefrom, one of said electrodes being connected with earth and the other with the conductor so as to form part of a grounded circuit when a flashover occurs over the surface of the insulator.

25. In an arrangement of the class described, an electric conductor, an insulator therefor placed substantially opposite the top part of the insulator and a second electrode placed substantially opposite the bottom part of the insulator, one of said electrodes being connected with earth and the other with the conductor so as to form part of a grounded circuit when a flashover occurs over the surface of the insulator and both of said electrodes extending away from the insulator parts so as to divert the arc away from the insulator parts when a flashover occurs thereon.

In testimony whereof, I have signed my name to this specification, in the presence of two subscribing witnesses.

LLOYD C. NICHOLSON.

Witnesses:
H. E. NICHOLS,
A. G. BIERMA.