Feb. 9, 1965 K. A. WEBER 3,168,818

MULTIPLE SHELF REFRIGERATED DISPLAY CABINET

Filed Aug. 27, 1962

FIG. 1.

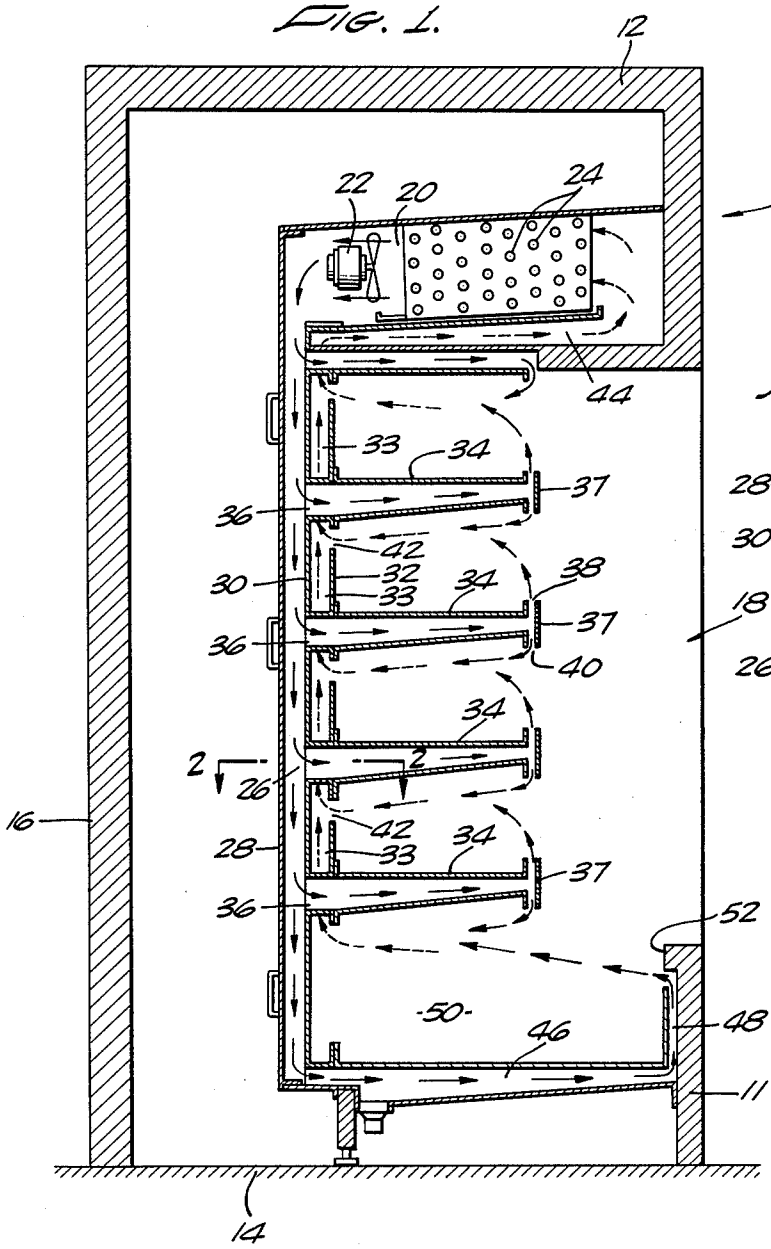

FIG. 2.

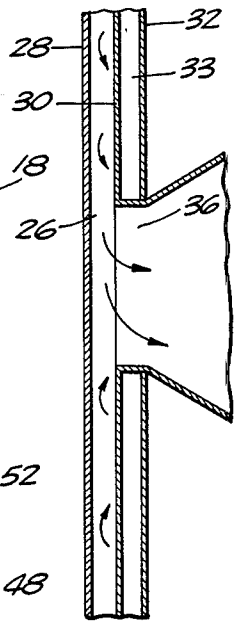

KARL A. WEBER
INVENTOR.

BY Lyon & Lyon
ATTORNEYS

United States Patent Office

3,168,818

Patented Feb. 9, 1965

3,168,818

MULTIPLE SHELF REFRIGERATED DISPLAY CABINET

Karl A. Weber, Los Angeles, Calif., assignor to Weber Showcase & Fixture Co., Inc., Los Angeles, Calif., a corporation of Delaware

Filed Aug. 27, 1962, Ser. No. 219,437

4 Claims. (Cl. 62—256)

This invention relates to an improved refrigerated showcase.

It is an object of this invention to provide a showcase for all types of food products wherein some degree of refrigeration is desirable.

It is an object of this invention to provide in a display case a novel circulation of refrigerated air around the objects on display.

A further object of this invention resides in delivering refrigerated air to the extreme front of each display bin and pulling same back over the produce.

Still a further object of this invention is to eliminate refrigerated air spillage from the showcase.

Still a further object of this invention is to provide a case wherein exact control over the discharge of refrigerated air to each display bin is maintained.

Other objects and advantages will be readily apparent from the following description:

In the drawings:

FIGURE 1 is a side elevation in section of a showcase embodying this invention.

FIGURE 2 is a view taken along line 2—2 of FIGURE 1.

An upright display case 10 has the usual insulated top 12, bottom 14 and rear walls 16, with the front wall broken away to afford an access opening 18. In this embodiment a chamber 20 is provided adjacent the upper end of the case which houses a blower 22 and refrigerated coils 24. An air supply duct 26 receives air from blower 22 and directs same downwardly towards the lower end of the display case. A sheet 28 forms the rear wall of such duct and sheet 30 the front wall. Spaced from sheet 30 is a further sheet 32 which forms a return duct 33. Projecting outwardly from sheet 32 are hollow shelves 34 which communicate with supply duct 26 through transverse flared ducts 36. Refrigerated air therefore is delivered by blower 22 into supply duct 26 whereby same flows through transverse ducts 36 into hollow shelves 34. At the outermost extremity of each shelf a diverter plate 37 is positioned in the path of such air to direct same through openings 38 and 40 above and below the shelves 34.

Plate 32 has return openings 42 therein beneath each shelf 34 and beneath chamber 20 whereby the air after being released at the extreme front of each shelf 34 is drawn into the return duct 33 wherein same flows upwardly through passage 44 to the refrigerated coil 24 for recirculation.

At the lowermost portion of the display case refrigerated air is diverted forwardly through passage 46, upwardly through passage 48 and directed rearwardly over display bin 50 by inturned edge 52 into return duct 33.

Thus in operation refrigerated air flows down duct 26 through transverse ducts 36 into hollow shelves 34. Air flow then is directed out openings 38 and 40 passing over

the items on display on shelves and is drawn or inhaled through openings 42 into return duct 33 and hence through passage 44 to refrigerated coil 24 by blower 22.

While what hereinbefore has been described as the preferred embodiment of this invention, it is readily apparent that alterations and modifications can be resorted to without departing from the scope of this invention and such alterations and modifications are intended to be included within the scope of the appended claims.

I claim:

1. In a refrigerated showcase the combination of: a series of transverse hollow shelves, each shelf having an air inlet at its rearmost extremity and an air outlet solely at its forwardmost extremity, duct means delivering refrigerated air to said shelves, diverting means at the forward extremity of said shelves directing flow of refrigerated air above and below each shelf, return duct means having openings therein, a blower associated with said return duct, means for drawing the air discharge above and below said shelves through said openings into said return duct means, and refrigerating means in the path of air moved by said blower.

2. In a refrigerated showcase the combination of: a series of transverse hollow shelves, each shelf having an air inlet at its rearmost extremity and an air outlet solely at its forwardmost extremity, a blower, an air supply duct, duct means communicating said supply duct with each shelf, means at the forwardmost extremity of each shelf diverting air released therefrom above and below said shelves, return duct means adjacent the rearmost extremity of each shelf receiving said air and returning same to said blower.

3. In a refrigerated showcase the combination of: a series of transverse hollow shelves, each shelf having an air inlet at its rearmost extremity and an air outlet solely at its forwardmost extremity, a blower, an air supply duct, duct means communicating said supply duct with each shelf, diverter means at the forwardmost extremity of each shelf directing flow above and below said shelves, a return duct adjacent the rearmost of each shelf having openings therein receiving the air drawn into said duct by said blower and returning same to said blower for recirculation and refrigerating means in the path of air moved by said blower.

4. In a refrigerated showcase the combination of: a series of transverse hollow shelves, each shelf having an air inlet at its rearmost extremity and an air outlet solely at its forwardmost extremity, a single supply duct, means communicating said supply duct with each shelf, diverter means at the forwardmost extremity of each shelf directing flow above and below said shelves, a return duct adjacent the rearmost extremity of each shelf having openings therein receiving air drawn into said duct by said blower and returning same to said blower for recirculation and refrigerating means in the path of air moved by said blower.

References Cited in the file of this patent

UNITED STATES PATENTS

2,855,760	Simons	Oct. 14, 1958
2,962,875	Barroero	Dec. 6, 1960
3,063,254	Dickson	Nov. 13, 1962
3,063,256	Lamb	Nov. 13, 1962
3,115,091	Rutishauser	Dec. 24, 1963