March 1, 1938. R. H. LAWSON ET AL 2,109,863

YARN FEEDING DEVICE

Filed Aug. 14, 1936 2 Sheets-Sheet 1

FIG. 1.

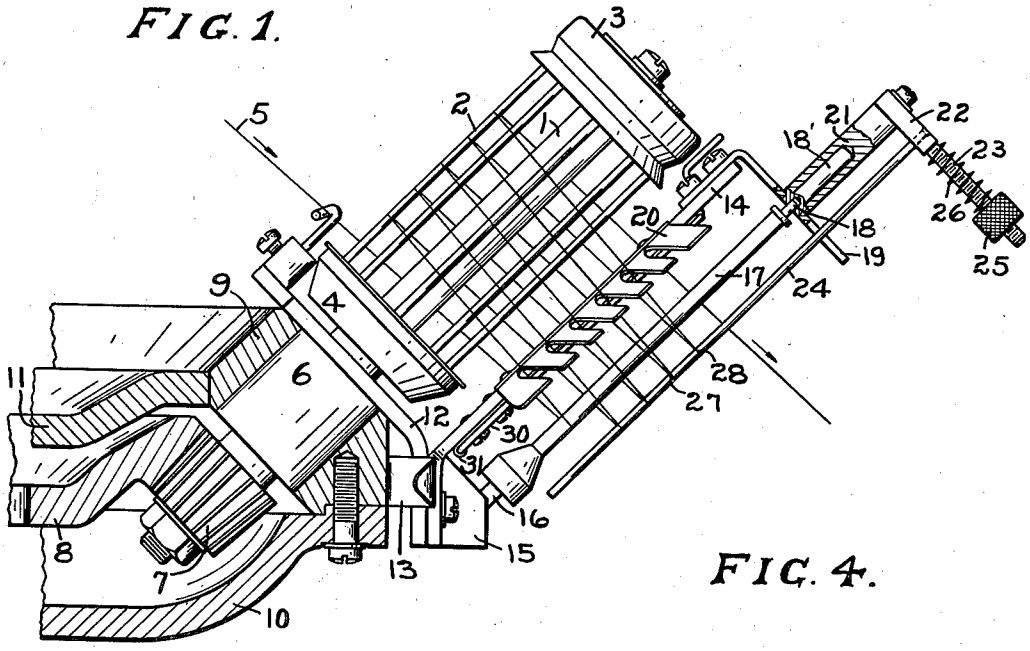

FIG. 4.

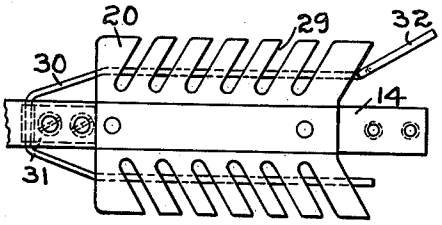

FIG. 5.

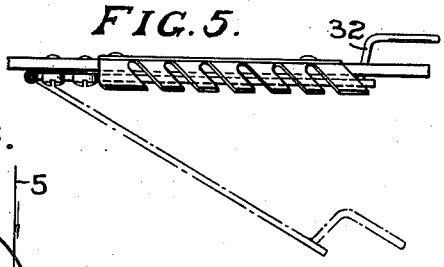

FIG. 2.

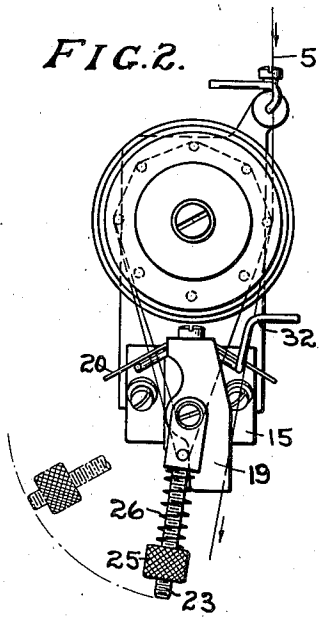

FIG. 3.

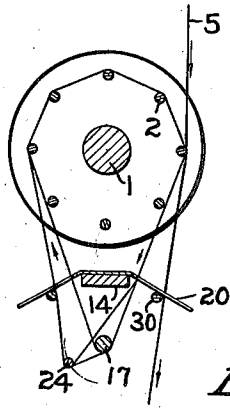

INVENTORS:
ROBERT H. LAWSON,
WILLIAM L. SMITH JR.,
AUGUSTIN GAGNE',
BY Roy N. Lovell,
ATT'Y.

March 1, 1938. R. H. LAWSON ET AL 2,109,863

YARN FEEDING DEVICE

Filed Aug. 14, 1936 2 Sheets-Sheet 2

FIG. 6.

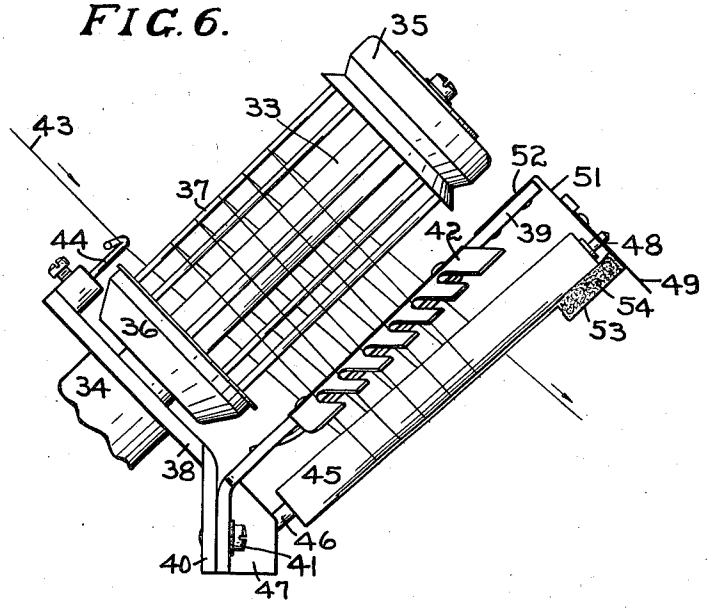

FIG. 7.

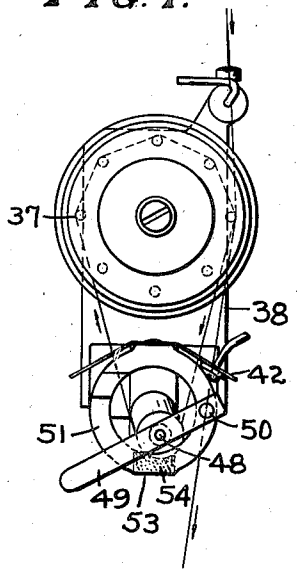

FIG. 8.

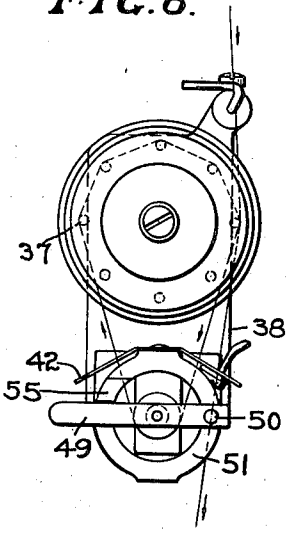

INVENTORS:
ROBERT H. LAWSON,
WILLIAM L. SMITH JR.,
AUGUSTIN GAGNE',
BY Roy F. Lovell,
ATT'Y.

Patented Mar. 1, 1938 2,109,863

UNITED STATES PATENT OFFICE

2,109,863

YARN FEEDING DEVICE

Robert H. Lawson and William L. Smith, Jr., Pawtucket, and Augustin Gagné, Central Falls, R. I., assignors to Hemphill Company, Central Falls, R. I., a corporation of Massachusetts

Application August 14, 1936, Serial No. 96,060
In Canada February 18, 1936

10 Claims. (Cl. 66—132)

The invention herein described concerns so-called positive feeding devices for textile machines, more especially knitting machines of similar type to that claimed in applicant's co-pending United States applications Ser. Nos. 14,492, 56,363, and 73,326, and this case is a continuation as to all common subject matter of those co-pending cases. Among the purposes of the invention are the positive feeding of a yarn from the source of supply under a minimum of tension and controlling this feeding in such a manner that fluctuations in resistance offered to the drawings of the yarn will be eliminated to as great an extent as possible, and further, to provide automatic compensation of the feeding to prevent over-running. This is particularly applicable to cases wherein the yarn is being fed at varying and rapidly fluctuating speeds.

In the drawings:

Fig. 1 is a sectional view illustrating the invention as it would be applied to a multi-feed knitting machine;

Fig. 2 is a plan showing one positive feeding mechanism as seen from the end thereof;

Fig. 3 is a section taken about mid-way of one of the feeding elements;

Figs. 4 and 5 show elevations of a yarn guiding comb which is employed to keep separate the convolutions of yarn which pass about each rotating feeding element;

Fig. 6 is an elevation illustrating a modified form of invention; and

Figs. 7 and 8 are plan views of the same showing a movable, driven, braking roller in active and inactive position.

The positive feeding device herein described comprises a driven, yarn feeding element about which the yarn to be fed is passed several times so that said yarn is frictionally advanced by the rotating element. As was characteristic of the copending applications above mentioned by applicant, the yarn feeding element is driven at a speed in excess of that required to feed the yarn if no slippage were contemplated. However, depending upon the amount of resistance offered at the supply and upon the rate at which the driven yarn is to be consumed, this driving or rotating element about which the yarn is snubbed or wrapped will engage that yarn and feed it with an amount of tractive effort which will be governed automatically to suit the occasion. With some particular types of yarn and especially while consuming the yarn at varying rates, for example, knitting pattern work such as knitting and floating, there has been found to be some tendency toward over-running. This over-running creates a temporary condition of slack yarn which has an effect on the fabric knitted, such over-running being one of the difficulties which we overcome by the positive feeding means herein described.

The yarn is wrapped about the positively rotated feeding element and also about another freely rotatable member which is to be driven by the yarn itself. It is a further characteristic of the invention that said yarn must be wrapped about this second or driven element, some turns in one direction to drive the element and other turns in the opposite direction to resist the movement of the element or to have a drag created thereon by the adverse contact with said element.

Now referring to Figs. 1–3 a spindle 1 having thereon a series of pins or wires 2 held in place by discs 3 and 4 fixed to the spindle comprise a yarn engaging and feeding roller or element about which a yarn 5 has been wrapped several times. This spindle passes through bearings in a sleeve or bushing indicated generally at 6 and is driven by means of pinion 7 engaging the teeth of a master driving gear 8. It is to be understood that several other similar feeding devices are to be spaced about the machine and would be driven by said gear 8 and inserted in a casing made up of annular portion 9, base 10 and cover 11. These parts have been described in detail in the copending applications above mentioned so that no further description is necessary herein.

A flange 12 is formed as an integral part of bushing 6 and retains the entire assembly in position by engaging with spring clip 13, but provides for quickly detaching the entire unit when necessary. At the lower end of flange 12 we have attached an angular bracket 14 having at its lower end a lug 15 carrying pivot 16 upon which the spindle 17 is free to rotate, this spindle also rotates in a bearing 18 formed in a stud 18' retained in an extension 19 fixed to the upper end of bracket 14. Bracket 14 also has a comb generally indicated by numeral 20 and having a series of inclined slots cut in its projecting sides for the purpose of guiding the several turns of yarn passing about the rotating feeding element and about spindle 17. This guiding means will be described in greater detail in one of the paragraphs following.

A post 21 pivots on stud 18' and has an arm consisting of the hub 22 and threaded extension 23 attached thereto. A wire 24 extends down from the hub 22 in close proximity so spindle 17

and the yarn 5 passing about spindle 17 is also passed over the lower end of this wire 24 so that upon certain conditions to be described, the arm and wire will be swung in an arc as illustrated in Figs. 2 and 3. A weight in the form of a knurled thumb nut 25 is threaded upon screw 23 and is maintained in place by tension spring 26. To vary the amount of effort required to swing this arm and wire in the arc illustrated the weight 25 may be adjusted closer or farther from the point about which the arm swings. As illustrated in Fig. 2, element 19 acts as a stop for the wire 24 in one direction and keeps the wire and arm from swinging in the wrong direction.

In actual practice one very satisfactory way to thread up the device is illustrated in Figs. 1 and 3, the yarn 5 being passed about the feeding element, a turn around spindle 17, then two turns wherein the yarn passes about the element, spindle 17 and wire 24, the spindle 17 thus being contacted three times by the yarn for the purpose of driving it. Said yarn is now passed about the element, by the opposite side of spindle 17 and about the wire 24 and then back to the element and from that to the needles of the knitting machine or whatever other disposal is to be made of the yarn being advanced. The yarn will thus be frictionally advanced by the driving element and at the two turns illustrated at 27 and 28 will be retarded by the rotation of spindle 17 adversely to the direction of travel of the yarn. This condition prevails while wire 24 is in a position such as that illustrated in Fig. 1, full lines. The driving effort imparted to the yarn will thus be the difference between that exerted by the said driving element and the drag created by the adverse movement of spindle 17. This drag has been found very effective in eliminating any tendency of the yarn to overrun as above mentioned. Now in the event additional resistance is encountered on the supply side of said feeding device, there will be a temporary tightening of the yarn coils about elements 2, 17, and 24 thus swinging the yarn and wire into a position somewhat as indicated in Fig. 3. This movement gives some relief to any temporary tightness of yarn on the needle side of the device. In this position the stretches of yarn at 27 and 28 upon which drag was exerted by the adverse movement of spindle 17 will be swung free of said spindle and the full driving effort of the rotated driving roll will be in effect.

For some types of yarn and certain pattern work which may be effected it may be found necessary to pass the yarn in opposition to the movement of spindle 17 a greater number of times or perhaps, fewer turns, this all being discovered by the knitter and being peculiar to each different condition.

Another scheme for threading the mechanism is illustrated in Fig. 2, the purpose of this particular threading being that of obtaining results similar to those obtained in the modification, Figs. 6, 7, and 8. By this method we thread the yarn about the feeding element, one turn about the free roll or spindle 17 and then several turns about the feeding element, spindle 17 and wire 24, and then lead the yarn to the needles. All of the stretches of yarn which pass about spindle 17 and wire 24 pass to the same side of the spindle so that there is a definite tendency to drive the spindle and none to retard its rotation. The result is that increases in tension cause the arm 23 to swing in an arc as indicated, the compensating action being sufficient for feeding some yarns at a definite predetermined tension.

The stretches of yarn which pass spindle 17 may not touch it except when arm 23 and wire 24 are swung from the full line to the dotted line position illustrated in Fig. 2. The movement of the arm and wire will provide for taking up any sudden tension which may be imposed upon the yarn at the delivery side of the device. There are many different ways of threading this feeding mechanism and it is not the purpose of this disclosure to go into a discussion of more than has been shown by way of example; the mechanism is to be claimed and obviously applicants are entitled to protection for the mechanism no matter what the uses are to which it may be put.

The yarn combs 20 indicated in Figs. 4 and 5 have a series of slots 29 within which the yarns are kept separate and within which they are held by a wire 30 pivoting in a hinge 31, this wire extending upwardly to either side of the comb to close the slots thus preventing the escape of any one of the stretches of yarn passing therethrough. At one side the wire has been bent as indicated at 32 and snaps over the top of the comb and is thus secured in position. The dot and dash line showing of Fig. 5, indicates the opened position of the wire in which position the elements are to be threaded.

Referring to Figs. 6, 7 and 8 we will describe a modified form of the invention wherein a spindle 33 rotates within bearings in a sleeve 34 and carries discs 35 and 36 maintaining a series of wires or rods 37 about which the yarn is wrapped all as described with respect to the corresponding elements in Fig. 1, etc. A flange 38 carries a bracket 39 attached thereto at the lower angular portion 40 of the flange by means of screws 41; this bracket also has attached about mid-way thereof a comb 42 similar to the comb 20 which functions to separate the turns of yarn and guide them to and from the driving element. A yarn 43 is threaded through a guide 44 and makes several turns about the driving element to be frictionally advanced by contact with the wires 37, each convolution of this yarn being guided through comb 42 and also about spindle or roller 45.

This roller 45 rotates upon a pivot 46 projecting upwardly from the lug 47 and within an opening 48 in an arm 49 at the upper end, Figs. 7 and 8. This arm 49 pivots at 50 at one side of an annular piece 51 which attaches to bracket 39 by a downwardly projecting extension 52 and which also has another downwardly projecting portion 53 carrying a felt pad 54 or similar block of material which serves as a brake. This brake normally works on the upper surface of spindle or roller 45 which may be made of metal or fiber or of any other suitable material.

The arm 49 is free to swing throughout an angle as illustrated in Figs. 7 and 8, the position in Fig. 7 indicating that in which said roller 45 bears against pad 54 to be retarded thereby and in the position of Fig. 8 said arm has been swung up to a position wherein it is stopped by lug 55.

In operation the yarn 43 will be driven by frictional engagement with the wire 37, the said spindle 33 being rotated at a speed faster than that required to advance the yarn. Roller 45 will be driven by the yarn which passes thereabout, but will be retarded by engagement with the pad 54. Whenever any unusual occasion prevents easy drawing of the yarn from the supply,

this roller **45** will be moved away from the pad so that the full driving effect of the rotating element will be imparted to the yarn. In actual practice the roller **45** bears with varying degrees of force against pad **54** so that this retarding effect of the pad on the roller and hence on the yarn, will automatically compensate for variations in effort required to draw the yarn from the supply and will cause said yarn to be fed to the needles under a constant tension. No overrunning will be possible since the retarding effect becomes a maximum under conditions of slack and thus will prevent any excess yarn feeding.

Two forms of the invention have been illustrated in this case and it is obvious that modifications would occur to those skilled in the art and that said modifications would still fall within the scope of the invention and of the claims hereto appended.

We claim:

1. A yarn furnishing device for knitting machines having in combination a positively rotated spindle about which a yarn is to be wrapped and by means of which said yarn is to be frictionally advanced, another spindle about which said yarn is to be passed in opposed directions so that said spindle will be driven by the yarn and will also tend to retard the advance of the yarn.

2. A yarn furnishing device for knitting machines having in combination a positively rotated spindle about which a yarn is to be wrapped and by means of which said yarn is to be frictionally advanced, another freely rotatable spindle adjacent the first about which coils of the said yarn are passed in opposite directions, an arm movable in a plane substantially at right angles to the axes of said spindle and means projecting from said arm about which the coils of yarn are also passed, said arm being so disposed that upon increase in tension on the yarn, some of the coils of yarn will be moved from engagement with the freely rotatable spindle.

3. Yarn furnishing means having in combination a rotatable element about which a yarn is passed in several wrappings, a spindle adjacent said element about which the wrappings of yarn pass some on one side and some on the other so that the said spindle will be driven by some of the wrappings of yarn and will be retarded by others and means automatically operated by the yarn itself for moving those retarding wrappings of yarn away from said spindle as described.

4. In a knitting machine of the type described, a yarn furnishing device including a positively driven yarn furnishing spindle about which several coils of the yarn are passed, a freely rotatable spindle adjacent and parallel to the first and means between the two for guiding the several coils of yarn from one spindle to the other, an arm swingable at right angles to the axes of the spindles and having a rod projecting therefrom adjacent said freely rotatable spindle and about which the coils of yarn are passed, said arm and rod being so disposed that in one position the coils of yarn fully affect the second spindle to respectively drive and retard the same, and in other positions to which it is movable under yarn tension, will move those yarn coils which retard said spindle away from the spindle to nullify their effect thereon.

5. Mechanism as defined in claim 4 wherein said arm has an adjustable weight movable along its length for the purpose described.

6. A yarn furnishing device having in combination a positively driven rotating element, a freely rotatable spindle adjacent thereto and a member about which yarn is to be passed adjacent to both the element and spindle and movable to and from the same, means for guiding yarn in several coils about the three elements and means for moving the said member in a direction to tighten said coils of yarn.

7. In a yarn furnishing device of the type described, a positively rotated feeding element, a freely rotatable spindle and a movable member about which several coils of yarn are to be wrapped for being frictionally advanced, means for guiding and separating the several coils of yarn passing about said element, spindle and member, said member depending from an arm so positioned that it swings in a direction to and from the element to loosen or to tighten the coils of yarn wrapped thereabout.

8. A yarn furnishing device having in combination a positively driven yarn feeding element rotating at a speed in excess of that at which yarn advanced by the element is to be fed, a freely rotatable spindle adjacent and substantially parallel to the axis of said element, an arm with a wire depending therefrom in such a position that coils of yarn wrapped about said element and spindle may also be wrapped about the wire, a weight on said arm for moving the arm and wire in a direction away from the spindle and element but permitting said wire to be moved towards the same in the event of a temporary increase in tension upon the running yarn.

9. A yarn furnishing device having in combination a positively driven feeding element and a freely rotatable spindle adjacent thereto about both of which coils of yarn are to be wrapped to be frictionally advanced, means for keeping the coils of yarn separated and other means functioning upon increase of tension to diminish the size of the yarn coils passing about said element and spindle and vice versa.

10. A yarn feeding device having in combination a positively rotated element about which yarn is to be wrapped to be frictionally advanced, a freely rotatable spindle adjacent said element about one side of which some coils of the wrapped yarn are passed, others of the coils passing to the other side of said element and in contact therewith, and means for moving some of the coils of yarn passing in contact with said element away from the same so that they are not engaged thereby.

ROBERT H. LAWSON.
WILLIAM L. SMITH, JR.
AUGUSTIN GAGNÉ.