April 18, 1944. W. M. CISSELL 2,346,821

APPARATUS FOR SPOTTING FABRIC MATERIALS

Filed June 28, 1940

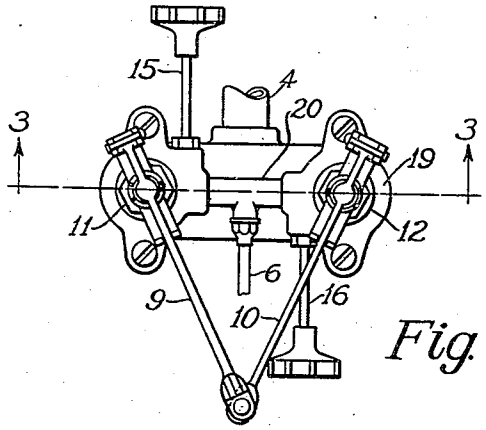

Fig. 1.

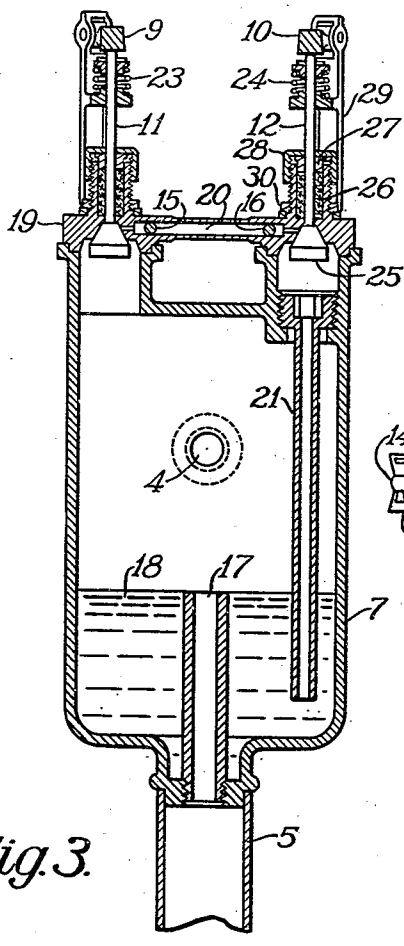

Fig. 3.

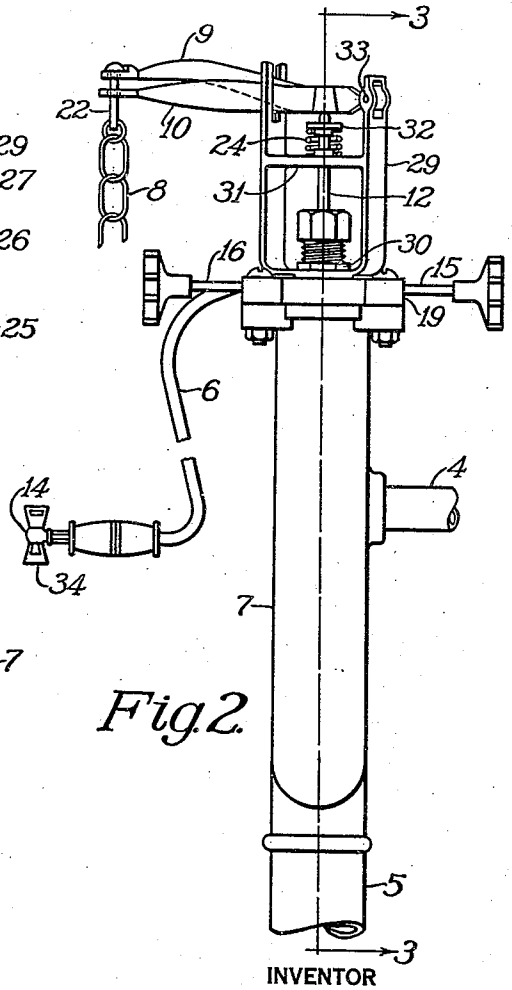

Fig. 2.

INVENTOR
WILLIAM M. CISSELL
BY John L. Milton
ATTORNEY

Patented Apr. 18, 1944

2,346,821

UNITED STATES PATENT OFFICE

2,346,821

APPARATUS FOR SPOTTING FABRIC MATERIALS

William M. Cissell, near Louisville, Ky.

Application June 28, 1940, Serial No. 342,855

3 Claims. (Cl. 68—5)

This invention relates to improvements in a steam humidifier for use in connection with steam cleaning and garment treating apparatus.

In cleaning and pressing certain fabrics with steam, particularly silks, velvets and woolens, it is necessary to vary and to change instantaneously the moisture content of the steam while the fabric is under treatment to provide the most effective and efficient cleaning and pressing thereof.

Therefore, one object of this invention is to provide apparatus for varying and instantaneously changing the moisture content of steam.

Another object of this invention is to provide a simple and compact device having a foot pedal control so that the hands of the operator are retained free for handling of the garment.

A further object of this invention is to provide a co-acting valve assembly for controlling simultaneously the rate of flow and moisture content of the steam.

The advantages of these and other objects will become apparent as the following description is read in connection with the accompanying drawing, in which

Figure 1 is a partial plan view of the steam condensing chamber showing the arrangement of the pedal-actuated control-valves on the head of the chamber, and the pre-set regulating valves;

Figure 2 is a partial side elevational view showing the co-acting relation between the dry-steam and moisture control valves actuated by the foot pedal, and also the corresponding pre-set regulating valves;

Figure 3 is a partial sectional view taken along lines 3——3 of Figure 2 showing the constructional details of the steam condensing chamber and pedal-actuated control-valves.

The preferred embodiment of the invention illustrated in the accompanying drawing has found particular use in removing spots from fabric garments and in treating the nap or pile of fabrics.

For this use, the apparatus is referred to as a steam spotting-unit, or as a moisture-controlled spotting-unit, and the steam condensing chamber 7 illustrated in the accompanying drawing is installed in a vertical position at one end of a horizontal spotting board.

The steam supply connection is made at 4, and this connection has a union and gate valve interposed therein for facilitating servicing of the apparatus.

The return line connection is made at 5, and this connection likewise has a union and gate valve interposed therein for facilitating servicing of the apparatus.

A suitable trap and drain is also included in the return line connection near the steam condensing chamber. However, if the steam is returned to the boiler under pressure, the trap may be omitted, and replaced by a suitable check valve installed in the steam return line near the steam condensing chamber.

A suitable foot pedal is installed horizontally beneath the spotting board, and this pedal is connected, via chain 8, to levers 9 and 10, which levers actuate the dry steam valve 11 and moisture valve 12.

At one end of the spotting board, a combination hanger and drip-cup for the spotting gun 14 is installed, which cup has an outlet connection to a suitable drain.

In operation, with the foot pedal depressed half-way, valve 11 opens and dry-steam is exhausted from the spotting gun 14, via hose connection 6. With the foot pedal depressed completely, both valves 11 and 12 open, and wet-steam is exhausted from the spotting gun 14, via the hose connection 6.

Pre-set regulating valves 15 and 16 are associated with conduit 20 connecting the pedal-actuated valves 11 and 12, and these regulating valves are adjusted to provide the desired mixture of dry steam and moisture.

In operation, it is customary to cover the horizontal spotting board with a Turkish towel boot, which boot absorbs the excess moisture liberated particularly in spotting silks and velvets. It is also customary to install these boots so that they may be quickly removed and replaced, inasmuch as they have been found to be unnecessary when spotting woolens or heavy fabrics.

Through experience, the operator soon learns the correct way of holding the gun, and the proper distance for exhausting either the dry or wet steam from the spotting gun 14 onto the surface of the fabric.

Ordinarily, the spotting gun 14 is held in a diagonal position when spotting silks and velvets, and under no circumstances is steam released directly over the spot or straight down upon a silk or velvet fabric.

In spotting silks it has been observed that satisfactory results are obtained when the spotting gun 14 is held at an angle 4 inches above and from 8 to 12 inches away from the spot, which angle is varied slightly depending upon the type of material and dye used in the fabric. This relation permits the steam exhausted from the

spotting gun 14 to cool sufficiently, and thus eliminate any perceptible bleeding of color.

From experience the operator also learns the correct amount of steam that may be released on various silks due to the dye and weave of the fabric, and whether dry or wet steam is to be used for the spot removing operation. However, in each instance, dry steam is used for feathering. Likewise, water spots on synthetics, as usually found on the linings of ladies coats, are removed quickly by applying dry steam.

In spotting velvets, the spotting gun 14 is held in a similar diagonal position, at least 4 inches above and from 12 to 18 inches away from the spot. This relation prevents matting of the pile of the velvet, and it is also customary to employ dry steam for feathering.

In spotting woolens, the spotting gun 14 is held straight down and as close to the fabric as desired. Ordinarily, to break-down heavy spots in woolens, a generous application of wet steam is necessary, which application is immediately followed with an application of dry steam for blowing-off and removing excess moisture. When it is found necessary to saturate the fabric, the saturated spot may be tapped with a chamois to assist the removal of the excess moisture.

For convenience, the nozzle of the spotting gun 14 is constructed so that it may be used as a spatula or scraper.

Having thus explained the general arrangement and operation of the apparatus, reference is now made to the drawing for a more detailed description of the construction of the essential parts.

With reference to Figure 3 it will be observed that the device comprises a vertically disposed steam condensing chamber 7, which chamber has a connection to the steam supply line at 4, and a connection to the steam return line at 5.

An overflow connection 17 is provided in the bottom of the steam condensing chamber 7, which connection is constructed and arranged so that water 18, formed from condensed steam, accumulates in the bottom of the steam condensing chamber 7 to the level determined by the height of the overflow connection.

A removable head 19 encloses the steam condensing chamber 7, and this head has included therein a dry-steam valve 11 and a moisture valve 12.

A conduit 20 connects the outlets of each of the aforesaid dry-steam and moisture valves, which conduit is intercepted by a hose connection 6, as illustrated in Figure 1. Conduit 20 serves as a mixing chamber.

As illustrated in Figure 3, a conduit 21 depends from the inlet of the moisture valve 12, and this conduit extends well below the level of the water 18.

Each outlet of the aforesaid dry-steam and moisture valves 11 and 12 is provided with a suitable needle-valve 15 and 16, for regulating the desired mixture of dry-steam and moisture.

Thus, steam entering at 4 partially condenses, and the condensate 18 formed thereby, along with any other condensate present in the steam received in the chamber, accumulates in the bottom of the steam condensing chamber 7.

Opening valve 11 only, exhausts dry-steam from the top portion of the chamber 7, while simultaneously opening each of the valves 11 and 12 syphons water from the bottom of the chamber 7, which water atomizes in passing through the jets of valves 12 and 16, and is mixed with the dry-steam exhausted from valve 11. Thus, the moisture content of the steam is greatly increased, as determined by the pre-set adjustment of the regulating valves 15 and 16.

With further reference to the drawing it will be observed that each valve 11 and 12 is actuated by a corresponding lever 9 and 10. As illustrated in Figures 1 and 2, the lever 9 of the dry-steam valve is disposed above the lever 10 of the moisture valve, and the levers are arranged so that a movement of lever 9 half-down opens only the dry-steam valve 11, while a movement of lever 9 completely down depresses lever 10, and the moisture valve 12 is opened simultaneously with the dry-steam valve 11.

As mentioned hereinbefore, and illustrated in Figure 2, the levers 9 and 10 are connected via chain 8 and link 22 to a foot-actuated pedal control.

As further illustrated in Figure 3, each of the valves 11 and 12 are biased to their normally-closed positions via compression springs 23 and 24. In this respect attention is directed to the fact that the construction of each of the valves 11 and 12 is similar. Therefore, a description of valve 12 will suffice for both of them.

The reciprocating stem of valve 12 has a conical gate 25 fixedly secured to its inner end, which gate 25 is adapted to register with a seat formed in the inner face of the removable head 19 for closing communication between the conduits 20 and 21. As illustrated, a suitable packing 26 seals the reciprocating valve stem by means of a gland 27 and nut 28.

As particularly illustrated in Figure 2, a cradle 29 is adjustably secured to the outer face of head 19 by means of a nut 30, and the reciprocating stem is slidably journaled in a cross arm 31.

A spring seat 32 is fixedly secured to the reciprocating stem near its outer end, and a compression spring 24 reacts between the cross arm 31 and seat 32, for biasing the valve 12 to its normally-closed condition.

The lever 10 is pivotally secured at 33 to one arm of the cradle 29, and is guided within the forked construction of the opposite arm, and, as hereinbefore mentioned, a depression of lever 10 depresses the reciprocating stem of valve 12, and thereby opens same.

Each of the regulating needle valves 15 and 16 are constructed in accordance with customary standards. Accordingly, a detailed description thereof is omitted, as it is believed that their construction and application is readily understood upon examining the accompanying drawing.

As hereinbefore mentioned, hose 6 connects the spotting gun 14, which gun has a discharge nozzle at 34.

From the foregoing description it will be apparent that the construction and operation of the illustrated embodiment has many new and novel features. Therefore, it is to be understood that I am not to be limited in any manner other than by the scope of the appended claims.

Having thus described the invention, I claim:

1. In apparatus for treating and cleaning fabric materials, the combination of a mixing chamber, an inlet connection to said chamber from a source of steam, an inlet connection to said chamber from a source of water, a spotting gun, an outlet connection for supplying steam from said mixing chamber to said spotting gun, a normally closed valve in each of said inlet connections, an actuating member for each valve, an operating member common to said valves, and

operating connections from said operating member to said actuating members, and means in the operating connection of the water valve providing a predetermined lost-motion to effect opening of the steam valve ahead of the water valve and to permit opening and closing of the steam valve alone when said operating member is operated through distances not exceeding the lost-motion provided in the operating connection to said water valve, whereby steam of varying wetness is supplied to said gun.

2. Apparatus according to claim 1 wherein said lost-motion connection provides for the closing of the water valve ahead of the closing of the steam valve.

3. In apparatus for treating and cleaning fabric materials with wet and dry steam wherein a spotting gun is supplied with steam of the required moisture content from a mixing chamber having an inlet connection to a source of steam and a second inlet connection to a source of water, the combination of a normally closed valve in each of said inlet connections, an actuating member for each valve, an operating member common to said valves, and operating connections from said operating member to said actuating members, and means in the operating connection of the water valve providing a predetermined lost-motion to effect opening of the steam valve ahead of the water valve and to permit opening and closing of the steam valve alone when said operating member is operated through distances not exceeding the lost motion provided in the operating connection to said water valve.

WILLIAM M. CISSELL.