(12) INTERNATIONAL APPLICATION PUBLISHED UNDER THE PATENT COOPERATION TREATY (PCT)

(19) World Intellectual Property Organization
International Bureau

(43) International Publication Date
3 April 2014 (03.04.2014)

WIPO | PCT

(10) International Publication Number
WO 2014/052045 A1

(51) International Patent Classification:
F16L 39/00 (2006.01) *F16L 25/12* (2006.01)
F16L 39/02 (2006.01) *B64D 37/32* (2006.01)

(21) International Application Number:
PCT/US2013/059707

(22) International Filing Date:
13 September 2013 (13.09.2013)

(25) Filing Language: English

(26) Publication Language: English

(30) Priority Data:
61/707,214 28 September 2012 (28.09.2012) US
61/793,942 15 March 2013 (15.03.2013) US

(71) Applicant: **EATON CORPORATION** [US/US]; 1000 Eaton Boulevard, Cleveland, OH 44122 (US).

(72) Inventors: **STATLER, Richard, L.**; 4570 Cathay Court, Denver, CO 80249 (US). **NSHIMIYE, Eric**; 3180 Sparks Road, Jackson, MI 49203 (US). **DARBY, Thomas, B.**; 17034 160th Place Se, Renton, WA 98058 (US). **CANTRELL, Christopher, T.**; 4014 Kingston Court, Jackson, MI 49203 (US).

(74) Agent: **GUENTHER, John, P.**; Dykema Gossett PLLC, 39577 Woodward Avenue, Suite 300, Bloomfield Hills, MI 48304 (US).

(81) Designated States *(unless otherwise indicated, for every kind of national protection available)*: AE, AG, AL, AM, AO, AT, AU, AZ, BA, BB, BG, BH, BN, BR, BW, BY, BZ, CA, CH, CL, CN, CO, CR, CU, CZ, DE, DK, DM, DO, DZ, EC, EE, EG, ES, FI, GB, GD, GE, GH, GM, GT, HN, HR, HU, ID, IL, IN, IS, JP, KE, KG, KN, KP, KR, KZ, LA, LC, LK, LR, LS, LT, LU, LY, MA, MD, ME, MG, MK, MN, MW, MX, MY, MZ, NA, NG, NI, NO, NZ, OM, PA, PE, PG, PH, PL, PT, QA, RO, RS, RU, RW, SA, SC, SD, SE, SG, SK, SL, SM, ST, SV, SY, TH, TJ, TM, TN, TR, TT, TZ, UA, UG, US, UZ, VC, VN, ZA, ZM, ZW.

(84) Designated States *(unless otherwise indicated, for every kind of regional protection available)*: ARIPO (BW, GH, GM, KE, LR, LS, MW, MZ, NA, RW, SD, SL, SZ, TZ, UG, ZM, ZW), Eurasian (AM, AZ, BY, KG, KZ, RU, TJ, TM), European (AL, AT, BE, BG, CH, CY, CZ, DE, DK, EE, ES, FI, FR, GB, GR, HR, HU, IE, IS, IT, LT, LU, LV, MC, MK, MT, NL, NO, PL, PT, RO, RS, SE, SI, SK, SM, TR), OAPI (BF, BJ, CF, CG, CI, CM, GA, GN, GQ, GW, KM, ML, MR, NE, SN, TD, TG).

Published:

— *with international search report (Art. 21(3))*

(54) **Title**: REMOVABLE JOINT SYSTEM FOR CONNECTING A HOSE OR TUBE AND SHROUDING TUBE

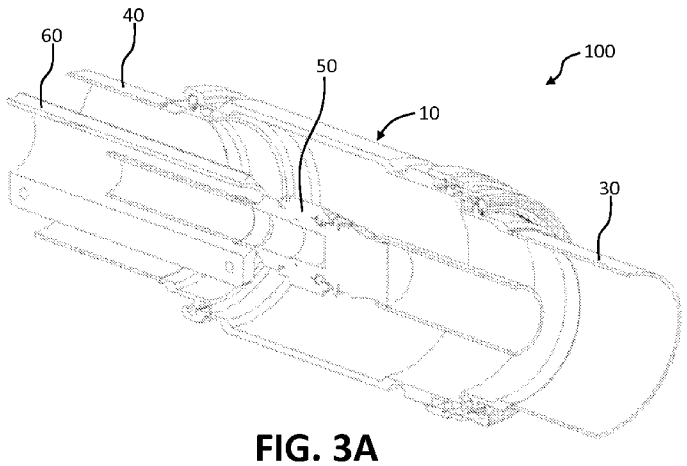

FIG. 3A

(57) **Abstract**: A removable joint system for connecting a hose or duct and a shrouding tube includes the hose or duct, a plurality of shrouding tubes (40, 30); and a plurality of couplers (10). The shrouding tubes are configured to encase the internal hose. The plurality of couplers are configured to connect shrouding tubes along the length of the hose. In embodiments, the couplers (10) are stretched/extended such that the formed joint may be sufficiently large to provide improved access to internal components (50).

WO 2014/052045 A1

REMOVABLE JOINT SYSTEM FOR CONNECTING A HOSE OR TUBE AND SHROUDING TUBE

CROSS-REFERENCE TO RELATED APPLICATIONS

[0001] This application claims the benefit of United States Provisional Application No. 61/793,942, filed March 15, 2013, currently pending, and United States Provisional Application No. 61/707,214, filed September 28, 2012, currently pending, the disclosures of which are incorporated herein by reference in their entirety.

TECHNICAL FIELD

[0002] The present disclosure relates generally to fluid conveyance devices and systems, including devices and systems that involve a hose and a shrouding tube.

BACKGROUND

[0003] Current federal regulations require, *inter alia*, that fuel systems that pass through certain designated areas of an aircraft are protected and deformable. An example of this is an auxiliary power unit (APU) line that passes through the fuselage. To address the requirements, some conventional systems employ a hose shrouded by a tube. With such systems the hose may be deformable, and the enclosing tube can provide a back-up to the line if the line leaks during operation. However, conventional systems are typically heavy and commonly involve lots of hardware. Moreover, such systems commonly require very long hoses that connect only at the front and the rear of the hoses.

[0004] Such configurations can, among other things, include small parts that can potentially lead to foreign object debris (FOD), require installation using tools, and/or provide various assembly and disassembly challenges.

[0005] It can be desirable to provide fuel systems that meet operational requirements and can provide lower FOD, use familiar joint hardware (e.g., couplers), provide improved access, reduce required tolerances, reduce hose length, and/or permit comparably quicker and tool-free installation and maintenance.

SUMMARY

[0006] A removable joint system for connecting a hose and a shrouding tube is disclosed. The joint system includes a hose, a plurality of shrouding tubes; and a plurality of couplers. The shrouding tubes may be configured to encase the internal hose. The plurality of couplers may be configured to connect shrouding tubes along the length of the hose. In embodiments, the couplers are stretched/extended such that the formed joint (connecting shrouding tubes) may be sufficiently large to provide improved access to internal components.

BRIEF DESCRIPTION OF THE DRAWINGS

[0007] Embodiments of the invention will now be described, by way of example, with reference to the accompanying drawings, wherein:

[0008] **FIGS. 1A, 1B, and 1C** are perspective, side elevational, and end views, respectively, that generally illustrate an embodiment of a shrouded coupler body;

[0009] **FIGS. 2A, 2B, and 2C** are first perspective, second perspective, and side elevational views, respectively, that generally illustrate an embodiment of a shrouded coupler joint; and

[0010] **FIGS. 3A and 3B** are perspective and side elevational views, respectively, that generally illustrate an embodiment of a shrouded coupler joint.

DETAILED DESCRIPTION

[0011] Reference will now be made in detail to embodiments of the present disclosure, examples of which are described herein and illustrated in the accompanying drawings. While the invention will be described in conjunction with embodiments, it will be understood that they are not intended to limit the invention to these embodiments. On the contrary, the invention is intended to cover alternatives, modifications and equivalents, which may be included within the spirit and scope of the disclosure.

[0012] **FIGS. 1A-1C** generally illustrate an embodiment of a shrouded coupler body 10 (which may also be referred to in general as a "coupling") according to teachings of the present disclosure. With embodiments, the shrouded coupler body 10 may be in the form of a threaded

barrel apparatus or device. The coupling configuration may be one that provides for quick assembly and does not require additional tools. Moreover, the coupler body 10 may be lightweight and may, for example and without limitation, be comprised of aluminum, stainless steel, or titanium. Embodiments of the coupler body 10 may be configured to employ standard interface sizes. The coupler body may be of the type that is used in tube-to-tube joint connections, such as that disclosed in United States Provisional Patent Application Serial No. 61/544,342, filed Oct. 7, 2011, which is incorporated herein in its entirety by reference.

[0013] With embodiments of the concept, the coupler body 10 may be "stretched" compared to other coupler bodies in conventional use. For example, with embodiments of the present concept, rather than forming a joint that may be less than one inch across the coupled connection, the formed joint may be several inches across the coupler and may, for example and without limitation, be formed so that the joint spans about 4.5 to 5 or more inches in length. Such an "extension" or "stretching" of the associated coupling/joint may permit better access to the assembly, including an inner hose. Further, such a configuration may provide improved access to assemble and disassemble the connection, as it may, among other things, provide additional room for access and/or tooling. If desired, the coupler body may also include an optional drain port.

[0014] The coupler body 10 may include a positive locking coupling 12 provided on at least one end of the coupler body 10. The positive locking coupling 12 may comprise a threaded connector having a locking mechanism. Examples of positive locking couplings that may be used in connection with the instant concept are disclosed in U.S. Patent No. 5,871, 239, which is incorporated herein in its entirety by reference. By way of example, and without limitation, the coupler body 10 may comprise a POSITIVELOK® coupling, such as that commercially available from Eaton Corporation.

[0015] **FIGS. 2A – 2C** generally illustrate first perspective, second perspective, and side elevational views, respectively, of an embodiment of a shrouded coupler joint 100. **FIGS. 2A – 2C** generally illustrate an outside of the coupler joint, including a coupler body 10, and first and second outer tubes 30, 40.

[0016] **FIGS. 3A and 3B** illustrate a perspective view and side elevational view, respectively, of an embodiment of a shrouded coupler joint 100. **FIGS. 3A and 3B** include cut-away views that, in part, generally illustrate an internal hose 50.

[0017] In embodiments, the joint system or assembly comprises multiple removable/separable joints (which may utilize multiple coupler bodies or couplings) provided along a length of a hose. Moreover, and as generally illustrated in the figures, associated components may be concentrically designed. Such configurations can, among other things, reduce the individual segment lengths of the required hose, and permit access to the hose at portions along the length of conveyance.

[0018] In an embodiment, such as for example in a conveyance connection providing continuous flow of fuel to an APU, the associated hose may be deformable (e.g., to meet requisite standards) and may pass through a fuselage with redundant shrouding. Such shrouding may be provided, for example, in the form of an aluminum tube with flanges. Coupler bodies (which may be extended/stretched as previously noted) can be included to provide access to an inside joint. At positions where internal hose access may not be required, but an outer tube requires a joint, an external swage solution may be employed. With embodiments, a joint may include a threaded interface for the hose, which may include standard interfaces that readily connect to a coupler body. Moreover, where desired, to maintain joint distance axially, the associated joint may include a limiting element 60. The limiting element 60 fits between flange ends of the first and second outer tubes 30, 40 that the coupler body 10 seals against, thereby preventing excessive axial movement of the first and second outer tubes 30, 40 that may damage o-rings provided between the flange ends and the coupler body 10. The limiting element 60 may also act or interact with additional component geometries, such as a small inner diameter (ID) component, and may be configured to support an inner hose connection. Such a support may provide, *inter alia*, structural and/or electrical connection(s) extending outside of the tube. The limiting element 60 may, for example, be comprised of a phenolic, nylon, or similar material. In embodiments, the inclusion of a limiting element 60 may, *inter alia*, prevent the joint from compressing beyond a given deflection envelope.

[0019] Further, in an embodiment, opposite ends of the coupler body 10 may each define a first inner diameter D1, and an intermediate portion of the coupler body 10 may define a second inner diameter D2 that is larger than the first inner diameter D1. This configuration can facilitate maintenance on an internal hose 50 and reduce the risk of O-ring failure due to spiraling during installation. It should be appreciated that the first inner diameter D1 and the second inner diameter D2 may be any suitable dimensions for a desired application.

[0020] To disassemble the coupler body 10 for access to the internal hose 50, the positive locking coupling 12 can be removed (*e.g.*, unthreaded) from the coupler body 10 and slid along the first outer tube 30 away from the coupler body 10. The positive locking coupling 12 includes a first retaining clip or other fastening device that secures the first outer tube 30 within the end of the coupler body 10. Thus, when the positive locking coupling 12 is removed from the coupler body 10, the first outer tube 30 is no longer secured to the coupler body 10. A second retaining clip that secures the second outer tube 40 to an opposite end of the coupler body 10 can be removed. The coupler body 10 may then be slid along either the first outer tube 30 or the second outer tube 40 to provide access to a desired portion of the internal house 50 (*e.g.*, an internal hose connection). As a result, the illustrated coupler body 10 may permit comparably quicker and tool-free installation and maintenance.

[0021] The foregoing descriptions of specific embodiments of the present invention have been presented for purposes of illustration and description. They are not intended to be exhaustive or to limit the invention to the precise forms disclosed, and various modifications and variations are possible in light of the above teaching. The embodiments were chosen and described in order to explain the principles of the invention and its practical application, to thereby enable others skilled in the art to utilize the invention and various embodiments with various modifications as are suited to the particular use contemplated. It is intended that the scope of the invention be defined by the claims and their equivalents.

CLAIMS

What is claimed:

1. A removable joint system for connecting a shrouding tube to encase a hose, the system comprising:

an internal hose;

a plurality of shrouding tubes for encasing the internal hose; and

a plurality of coupler bodies configured to connect shrouding tubes along the length of the hose.

2. The removable joint system of claim 1, wherein at least one of the coupler bodies has an externally threaded interface provided on at least one end of the respective coupler body.

3. The removable joint system of claim 1, wherein the coupler body has a positive locking coupling provided on at least one end of the respective coupler body.

4. The removable joint system of claim 1, wherein at least one of the coupler bodies is connected at opposite ends to the shrouding tubes by annular fasteners.

5. The removable joint system of claim 4, wherein the annular fasteners are concentric with the respective coupler body.

6. The removable joint system of claim 1, wherein at least one of the coupler bodies includes a limiting element configured to maintain an axial length of the joint formed between the shrouding tubes and the respective coupler body.

7. The removable joint system of claim 6, wherein the limiting element supports at least a portion of the internal hose along a centerline of the respective coupler body.

8. The removable joint system of claim 1, wherein opposite ends of at least one of the coupler bodies have a first diameter and an intermediate portion of the respective coupler body has a second diameter that is larger than the first diameter.

9. The removable joint system of claim 1, wherein at least one of the coupler bodies has an axial length of at least about 4.5 inches.

10. The removable joint system of claim 1, wherein at least one of the coupler bodies has an axial length of at least about 5.0 inches.

11. A removable joint system for connecting shrouding tubes to encase an inner tube, the removable joint system comprising:

a first inner tube and a second inner tube coupled together by a tube connection;

a first outer tube surrounding the first inner tube and a second outer tube surrounding the second inner tube; and

a coupler body encasing the tube connection and connecting the first outer tube and the second outer tube.

12. The removable joint system of claim 10, wherein the coupler body has an externally threaded interface provided on at least one end of the coupler body.

13. The removable joint system of claim 10, wherein the coupler body has a positive locking coupling provided on at least one end of the respective coupler body.

14. The removable joint system of claim 10, wherein the first outer tube and the second outer tube are respectively connected to opposite ends of the coupler body by annular fasteners.

15. The removable joint system of claim 14, wherein the annular fasteners are concentric with the coupler body.

16. The removable joint system of claim 10, wherein the coupler body includes a limiting element configured to maintain an axial length of the joint formed between the first and second outer tubes and the coupler body.

17. The removable joint system of claim 16, wherein the limiting element supports at least a portion of the tube connection along a centerline of the coupler body.

18. The removable joint system of claim 10, wherein opposite ends of the coupler body each has a first diameter and an intermediate portion of the coupler body has a second diameter that is larger than the first diameter.

19. The removable joint system of claim 10, wherein the coupler body has an axial length of at least about 4.5 inches.

20. The removable joint system of claim 10, wherein the coupler body has an axial length of at least about 5.0 inches.

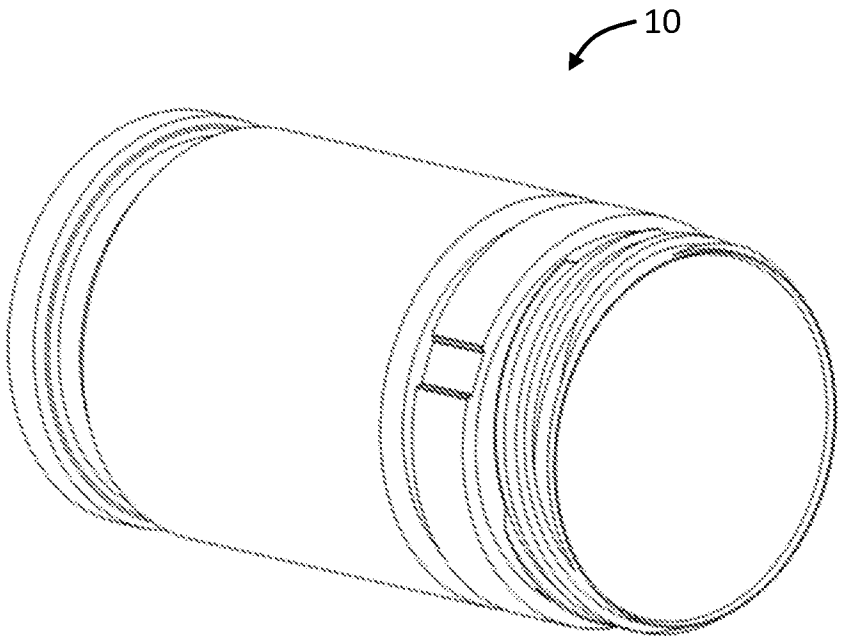

FIG. 1A

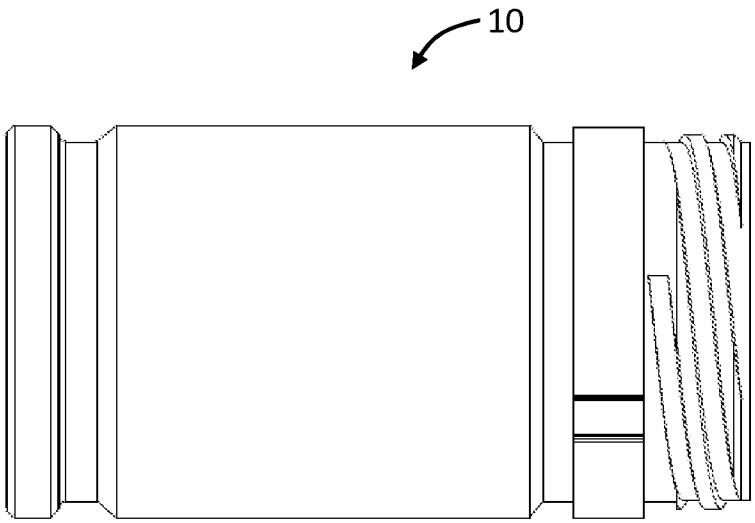

FIG. 1B

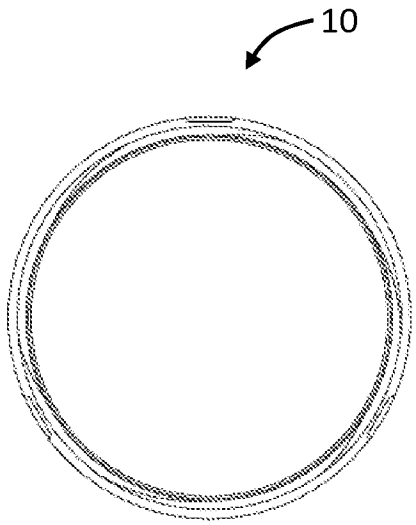

FIG. 1C

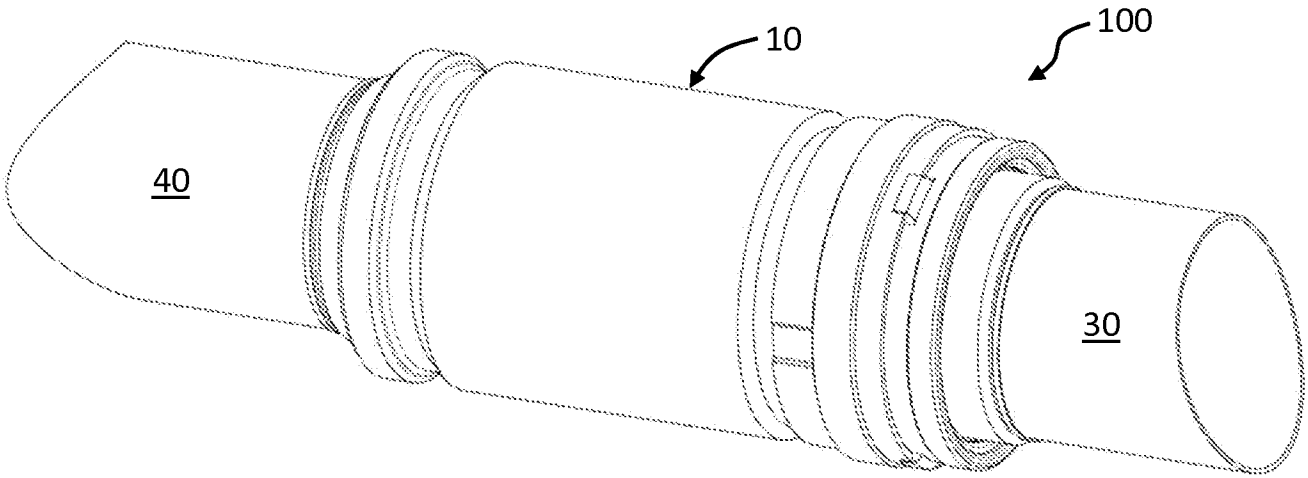

FIG. 2A

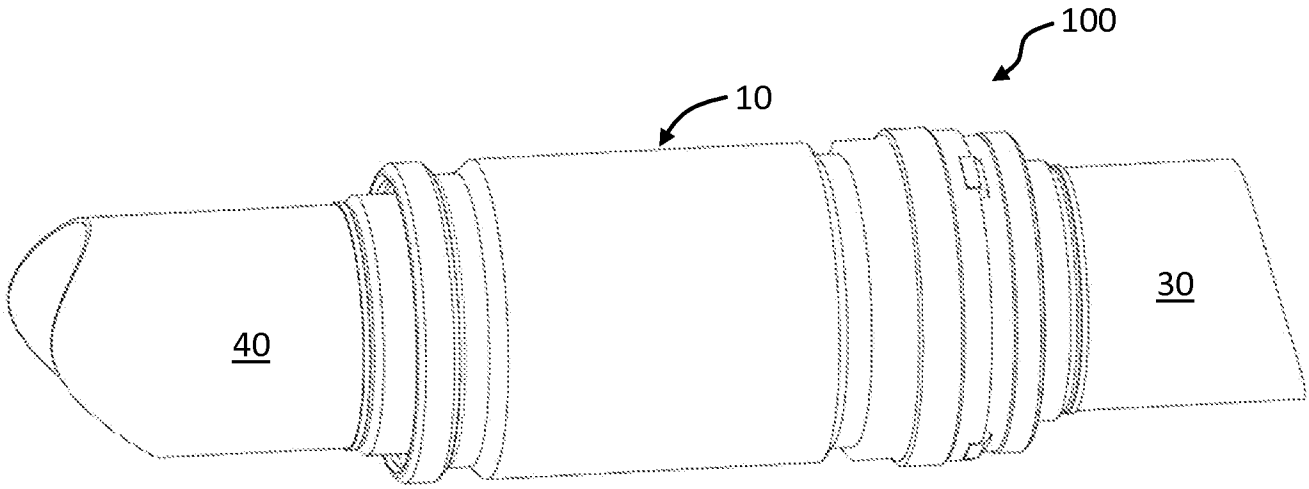

FIG. 2B

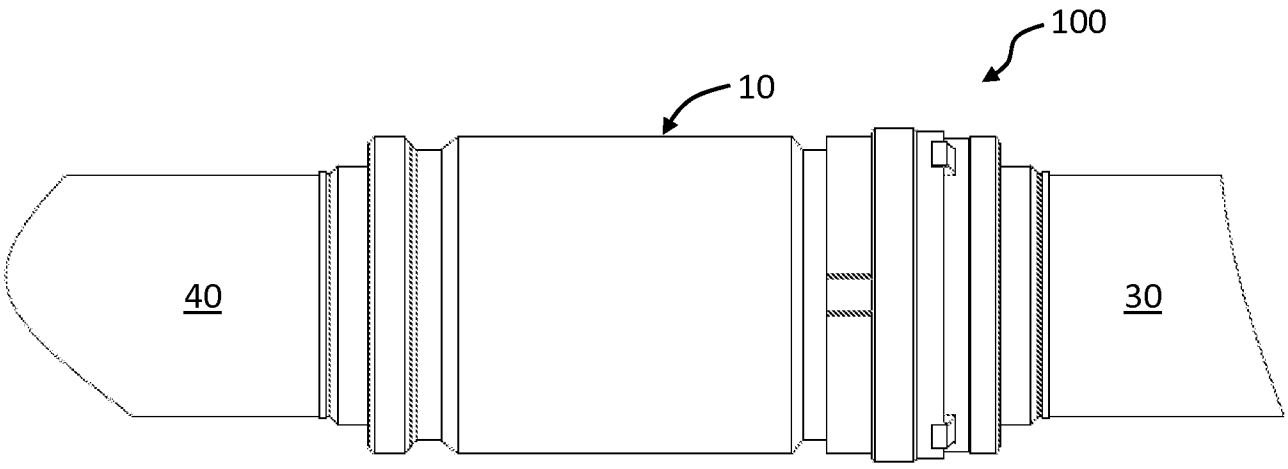

FIG. 2C

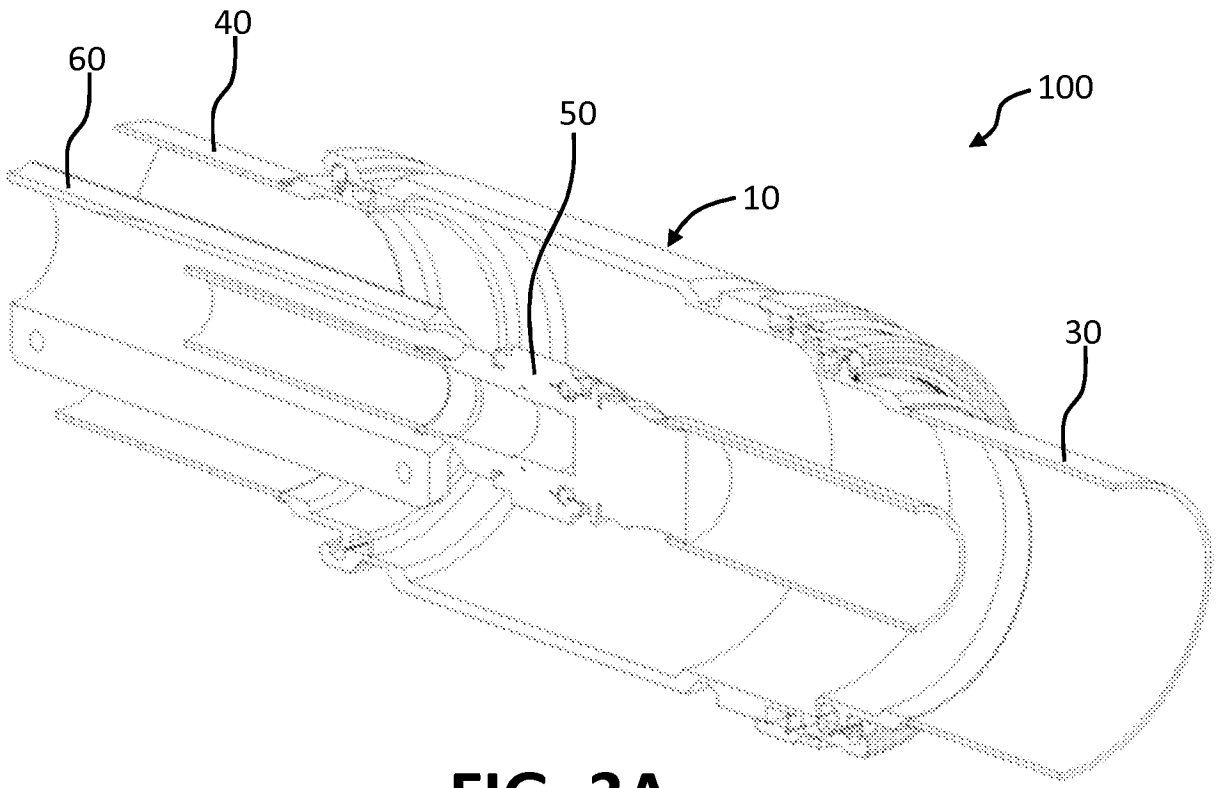

FIG. 3A

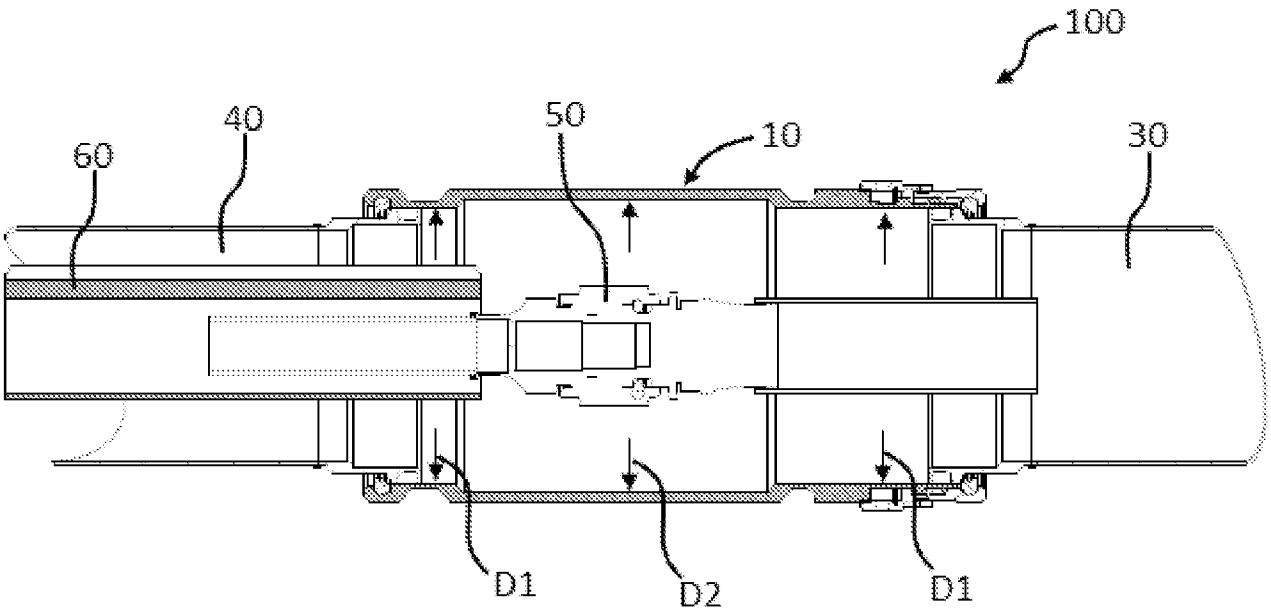

FIG. 3B

INTERNATIONAL SEARCH REPORT

International application No
PCT/US2013/059707

A. CLASSIFICATION OF SUBJECT MATTER
INV. F16L39/00 F16L39/02 F16L25/12 B64D37/32
ADD.

According to International Patent Classification (IPC) or to both national classification and IPC

B. FIELDS SEARCHED

Minimum documentation searched (classification system followed by classification symbols)
F16L B64D

Documentation searched other than minimum documentation to the extent that such documents are included in the fields searched

Electronic data base consulted during the international search (name of data base and, where practicable, search terms used)
EPO-Internal, WPI Data

C. DOCUMENTS CONSIDERED TO BE RELEVANT

Category*	Citation of document, with indication, where appropriate, of the relevant passages	Relevant to claim No.
X	FR 2 849 151 A1 (IN FLEX [FR]) 25 June 2004 (2004-06-25) page 4, lines 28-31 page 5, lines 1-8 page 5, line 14 - page 9, line 5 figures -----	1-20
X	FR 2 639 702 A1 (AEROSPATIALE [FR]) 1 June 1990 (1990-06-01) page 3, line 30 - page 9, last line figures -----	1-20
X	EP 2 053 294 A2 (BOEING CO [US]) 29 April 2009 (2009-04-29) paragraph [0008] - paragraph [0023] figures -----	1-20

☐ Further documents are listed in the continuation of Box C.

☒ See patent family annex.

* Special categories of cited documents :

"A" document defining the general state of the art which is not considered to be of particular relevance

"E" earlier application or patent but published on or after the international filing date

"L" document which may throw doubts on priority claim(s) or which is cited to establish the publication date of another citation or other special reason (as specified)

"O" document referring to an oral disclosure, use, exhibition or other means

"P" document published prior to the international filing date but later than the priority date claimed

"T" later document published after the international filing date or priority date and not in conflict with the application but cited to understand the principle or theory underlying the invention

"X" document of particular relevance; the claimed invention cannot be considered novel or cannot be considered to involve an inventive step when the document is taken alone

"Y" document of particular relevance; the claimed invention cannot be considered to involve an inventive step when the document is combined with one or more other such documents, such combination being obvious to a person skilled in the art

"&" document member of the same patent family

Date of the actual completion of the international search	Date of mailing of the international search report
12 December 2013	20/12/2013

Name and mailing address of the ISA/	Authorized officer
European Patent Office, P.B. 5818 Patentlaan 2 NL - 2280 HV Rijswijk Tel. (+31-70) 340-2040, Fax: (+31-70) 340-3016	Durrenberger, Xavier

1

INTERNATIONAL SEARCH REPORT

Information on patent family members

International application No
PCT/US2013/059707

Patent document cited in search report	Publication date	Patent family member(s)	Publication date
FR 2849151 A1	25-06-2004	NONE	
FR 2639702 A1	01-06-1990	FR 2639702 A1	01-06-1990
		US 5011193 A	30-04-1991
EP 2053294 A2	29-04-2009	AT 546681 T	15-03-2012
		EP 2053294 A2	29-04-2009
		ES 2382835 T3	13-06-2012
		US 2009102187 A1	23-04-2009