March 11, 1952 N. G. TUCKER 2,588,999

REED HAT LEATHER TRIMMING MACHINE

Filed March 2, 1948 2 SHEETS--SHEET 1

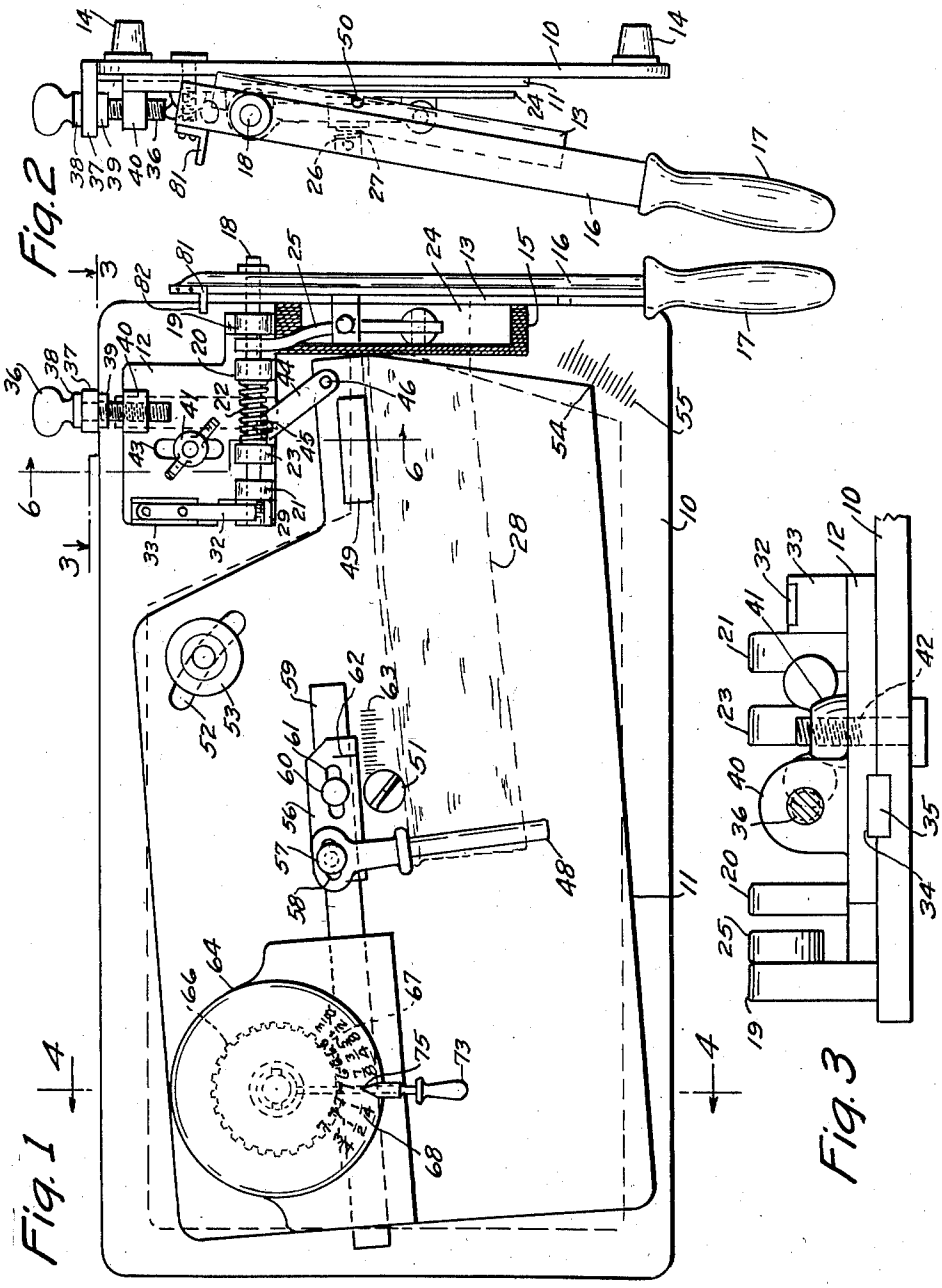

Fig. 2

Fig. 1

Fig. 3

INVENTOR
NATHANIEL GEORGE TUCKER
James Harrison Bowen
ATTORNEY

March 11, 1952 N. G. TUCKER 2,588,999

REED HAT LEATHER TRIMMING MACHINE

Filed March 2, 1948 2 SHEETS--SHEET 2

Fig. 5

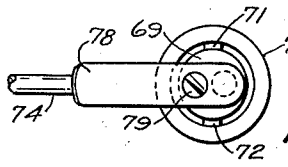

Fig. 4

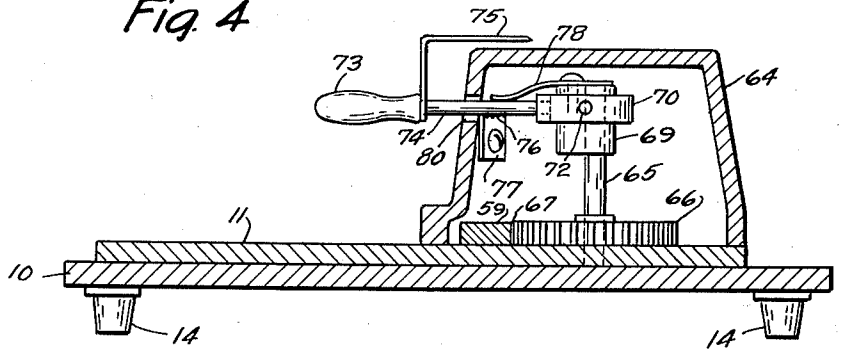

Fig. 6

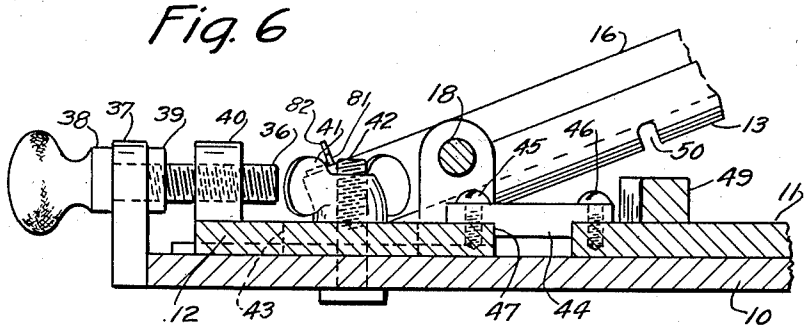

Fig. 7

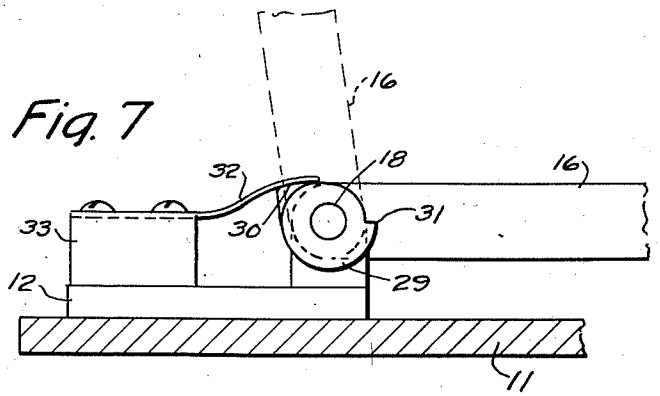

INVENTOR
NATHANIEL GEORGE TUCKER
James Harrison Bowen
ATTORNEY

Patented Mar. 11, 1952

2,588,999

UNITED STATES PATENT OFFICE

2,588,999

REED HAT LEATHER TRIMMING MACHINE

Nathaniel George Tucker, Forest Hills, N. Y.

Application March 2, 1948, Serial No. 12,652

5 Claims. (Cl. 223—22)

1

This invention relates to hat leather or sweat band trimming machines wherein the bands are folded over a pin and both ends cut at the same time, and in particular a hat leather trimming machine for bands having reeds in the edges thereof wherein it is desired to trim the leather with the reed projecting at the end.

The purpose of this invention is to provide means for trimming hat leathers having reeds therein without cutting the reeds.

This invention is an improvement over the hat leather trimming machine in my Patent Number 2,118,278, in that a notch is provided in the knife and means is provided for adjusting the position of the knife and band holding elements so that the notch registers with a reed in a band positioned to be cut by the knife.

In the usual trimming machines for this purpose the leather bands are placed over a pin that is adjustably mounted on a panel and the panel is pivotally mounted on a base plate at a far corner thereof. This arrangement permits very little adjustment and for this reason the panel of this invention is pivoted at the center whereby the band may readily be moved over a relatively large angle range.

In these machines considerable time is lost in throwing the knife handle all of the way over to a position of rest and to overcome this objection this machine contemplates a handle mounting including a collar having a flat side and a tooth with a spring coacting with the flat side to frictionally hold the handle and with the end of the spring positioned to stop and hold the handle just over the center by engaging the tooth wherein the handle will be held substantially upright while a leather is being positioned in the machine.

This invention also includes improvements in the construction and arrangement of the parts wherein the machine operates more efficiently and wear in the parts is reduced to a minimum.

Machines of this type are also subjected to considerable abuse particularly from inexperienced workmen and for this reason the parts are of rugged and at the same time open construction wherein the operating instrumentalities are not easily damaged, and may readily be removed and repaired or replaced.

In the hat industry it is often difficult to obtain experienced operators and with this thought in mind this invention provides hat size indicators and other adjusting gages in convenient positions so that there is very little excuse for making mistakes.

2

The object of this invention is, therefore, to provide an improved hat leather trimming machine that cuts bands with reeds projecting therefrom in which the parts are readily adjustable.

Another object of the invention is to provide a hat leather trimming machine wherein the movement of the knife to different positions to compensate for bands of different sizes and styles is synchronized with the movement of the leather carrying panel or table.

Another object of the invention is to provide means for adjusting the position of the knife with the knife maintained in alignment with a stationary shear blade.

A further object of the invention is to provide an improved hat leather trimming machine for cutting leathers having reeds therein which is of a simple and economical construction.

With these and other objects and advantages in view the invention embodies a horizontally disposed base plate or table, a hat leather mounting panel pivotally mounted on the base plate, means adjustably positioning the leather on the panel, a knife, having a notch therein, pivotally mounted on the said base plate through a sliding bracket which is linked to the panel, means adjusting the position of the bracket and panel, and a leather holding clamp coacting with the knife.

Other features and advantages of the invention will appear from the following description taken in connection with the drawings, wherein:

Figure 1 is a plan view of the improved hat leather trimming machine with a leather band indicated thereon in dotted lines.

Figure 2 is a view showing an end elevation of the machine.

Figure 3 is a view looking toward the end of the knife mounting bracket taken on line 3—3 of Figure 1, with parts omitted.

Figure 4 is a cross section on line 4—4 of Figure 1 showing the hat size adjusting casing.

Figure 5 is a detail looking downward upon the upper end of the pointer mounting post in the casing shown in Figure 4 with the casing omitted.

Figure 6 is a cross section through the knife mounting bracket taken on line 6—6 of Figure 1 illustrating the adjusting means therefor.

Figure 7 is a detail looking toward the end of the knife mounting bracket, with parts omitted and parts in section, showing the spring and tooth for holding the knife.

Referring now to the drawings wherein like

reference characters indicate corresponding parts the improved hat leather trimming machine of this invention includes a base plate 10, a slidable panel 11, a bearing bracket 12, and a knife 13.

The base plate 10 is mounted on posts 14 and at one end is a knurled shear plate 15 that is positioned to coact with the knife 13 which is mounted on a bar 16 having a handle 17 on the outer end. The bar 16 is mounted on a shaft 18 that is journaled in bearings 19, 20, and 21 of the bracket 12 and the cutting edge of the knife is resiliently urged toward the edge of the shear plate 15 by a spring 22 positioned between the bearing 20 and a collar 23 on the shaft. A gripping plate 24 is carried by an arm 25 which is pivotally mounted on the shaft 18 and the outer end of the arm is held in a bracket 26 on the back of the bar 16 of the knife. The bracket 26 is provided with a spring 27 that resiliently holds the plate 24 so that it presses downward firmly holding the ends of a band 28 on the shear plate 15. The outer end of the shaft 18 is provided with a collar 29 having a flat side 30 and a tooth 31 and with a spring 32 positioned on a block 33 on the bracket bearing against the flat surface the knife will be resiliently held, as shown in Figure 7, and when the knife is raised to a position just over the center, as indicated by the dotted lines in Figure 7, the tooth 31 will engage the end of the spring and thereby hold the knife in an upright position while the band is being changed or adjusted.

The under surface of the bracket 12 is provided with a slot 34 by which it is slidably mounted on a key 35 positioned in the base plate 10, as shown in Figure 3 so that the bearings on the bracket will be held perpendicular to the end face of the base plate, and the position of the bracket may readily be adjusted by a thumb screw 36, which extends through an opening in a bearing 37 at the edge of the base plate, as shown in Figure 6. The screw is held between collars 38 and 39 and with the end threaded in a lug 40 on the bracket the position of the bracket may readily be adjusted by turning the screw. The bracket 12 is clamped to the base plate 10 by a wing nut 41 on a stud 42 that extends through a slot 43 therein, and the inner edge of the bracket is attached to the panel 11 by a link 44, as shown in Figures 1 and 6.

One end of the link 44 is connected by a screw 45 which extends through an unthreaded opening in the link and is threaded into the bracket 12, to the bracket and the other end by a screw 46 which extends through an unthreaded opening in the link and is threaded into the panel 11 to the panel, and with the under side of the link provided with a shoulder 47 which is parallel to and abuts the edge of the bracket 12, the link will draw the panel with the bracket so that with the band 28 on the pin 48 and the edge in which the reed is provided positioned against the block 49 on the panel the reed will register with a notch 50 in the knife. In adjusting the parts the screw 46 travels on a radius from the center of the pin 51 and owing to the length of the radius the pin travels substantially in a straight line whereby it is essential that the shoulder 47 hold the link 44 in the angular position shown in Figure 1. By this means the material of the band may be cut around the reed and the reed will extend through the notch.

With the panel connected to the bracket in this manner the bracket follows the panel as the panel is adjusted for hat leathers of different sizes whereby with the distance from the notch in the cutting edge of the knife to the pivotal mounting of the knife in the bracket constant, the reed of a hat leather positioned against the block 49 will always register with the notch in the knife so that the knife will cut the leather without cutting the reed.

The panel 11 is pivotally mounted on a centrally disposed pin 51 and one side thereof is provided with an arcuate slot 52 through which it may be clamped in adjusted positions by a thumb screw 53. The lower corner 54 is positioned to register with graduations 55 on the base plate so that the position thereof may readily be determined.

The hat leather holding pin 48 is pivotally mounted on a block 56 by a thumb screw 57 in a slot 58 and the block 56 is slidably mounted on a bar 59 on which it is held by a thumb screw 60 in a slot 61. The block 56 is provided with an indicating mark 62 that registers with graduations 63 on the panel to facilitate setting the position of the pin, and the bar 59 is slidably held in a head 64 on the far end of the panel. The head 64 is positioned over a post 65 on which is a gear 66 that meshes with a rack 67 on the bar 59 and it will be noted that by turning the post the bar may be slid inward and outward to adjust the pins 48 to different hat sizes as indicated by the numerals 68 on the surface of the head. The upper end of the post 65 is provided with an eccentrically positioned hub 69 and a ring 70 is pivotally mounted thereon by pins 71 and 72, as shown in Figures 4 and 5. A handle 73 is mounted on the ring through a rod 74 and the handle is provided with a pointer 75 which is positioned to register with the hat sizes 68 on the upper surface of the head. The rod 74 is urged downward into notches 76 in the upper edge of a plate 77 by a spring 78 that is held on the upper end of the hub 69 by a screw 79. The rod 74 extends through a slot 80 in the face of the head, as shown in Figure 4.

In addition to the spring 32 a bracket 81 may be provided on the upper surface of the bar 16, as shown in Figures 1 and 2, and the bracket is provided with a projection 82 that extends over to contact the upper surface of the base plate 10 when the handle is upright and just over the center, to insure the handle and knife being held upright should the spring 32 slip off of the collar 29 or break.

With the parts arranged in this manner the hat leather or sweat band 28 may be positioned on the panel 11 and with the ends of the band adjusted by the left hand the knife may be actuated by the right hand so that the ends of the band may be cut with the reeds extending therefrom, and with the parts adjustably held the bands may be accurately positioned so that they may be cut to exact measurements.

It will be understood that modifications may be made in the design and arrangement of the parts without departing from the spirit of the invention.

What is claimed is:

1. A hat leather trimming machine comprising a base plate, a hat leather holding panel pivotally and slidably mounted on said base plate, a bracket slidably mounted on the base plate, a knife having a notch in the cutting edge thereof pivotally mounted on said bracket, means for adjusting the position of the bracket to position the knife in cutting relation with hat leather

holding elements on the end of the base plate on which the bracket is mounted, and means connecting the bracket to the hat leather holding panel whereby the bracket follows the panel so that a reed of a hat leather extended from said panel registers with the notch in the cutting edge of the knife.

2. A hat leather trimming machine comprising a base plate, a knife having a notch in the cutting edge thereof positioned at one end of the base plate, a hat leather holding panel slidably mounted on the base plate, means pivotally connecting the panel to the base plate, a bracket adjustably mounted on said base plate, means pivotally mounting the knife on the bracket, and a link pivotally connecting the bracket to the panel whereby a reed in the ends of a hat leather extended from the end of the panel registers with the notch in the cutting edge of said knife.

3. A hat leather trimming machine comprising a base plate, a hat leather holding panel slidably mounted on said base plate, a bracket adjustably mounted on the base plate, a handle pivotally mounted on said bracket and positioned to correspond with one end of the base plate, a knife having a notch in a cutting edge thereof carried by the handle, and means connecting the panel to the bracket whereby the bracket follows the panel so that the notch in the cutting edge of the knife receives a reed in the end of a hat leather extended from the panel.

4. In a hat leather trimming machine, the combination which comprises a horizontally disposed base plate, a hat leather holding panel slidable on said base plate and positioned to hold a hat leather with ends thereof extended from one end of the base plate, a pin centrally positioned in the panel pivotally mounting the panel on the base plate, a hat leather holding pin adjustably mounted on the panel, means clamping the panel in adjusted positions on the base plate, a bracket slidable on the base plate, means positioning the bracket on the base plate, means clamping the bracket in adjusted positions on the base plate, a thumb screw rotatably mounted on the base plate and extended into a threaded lug on the bracket for adjusting the position of the

bracket, a link pivotally connecting the bracket to the hat leather holding panel, a shaft rotatably mounted in the bracket, a knife having a notch in the cutting edge thereof mounted on said shaft, said bracket and shaft being actuated by said link to follow the panel whereby the notch in the cutting edge of the knife is positioned to receive a reed in the ends of a hat leather extended from the panel.

5. In a hat leather trimming machine, the combination which comprises a base plate, a hat leather holding panel slidably mounted on said base plate, hat leather holding elements adjustably mounted on said panel and positioned to hold a hat leather with ends thereof extended from one end of the base plate, a bracket slidably mounted on the base plate, means adjusting the position of the bracket on the base plate, a knife having a notch in the cutting edge thereof pivotally mounted on said bracket, a hat leather gripping plate pivotally mounted on the bracket and positioned on the end of the base plate from which the ends of the hat leather extend, a shear plate positioned to coact with the gripping plate to hold a hat leather, means resiliently urging the gripping plate against the shear plate, means retaining the knife in an upwardly extended position, and a link connecting the said bracket to the hat leather holding panel whereby the bracket follows the panel to position the knife with the notch in the cutting edge thereof in registering relation with a reed in the ends of a hat leather extended from the end of the base plate.

NATHANIEL GEORGE TUCKER.

REFERENCES CITED

The following references are of record in the file of this patent:

UNITED STATES PATENTS

Number	Name	Date
18,065	Toulmin	Aug. 25, 1857
1,862,161	Reynolds	June 7, 1932
2,118,278	Tucker	May 24, 1938
2,207,024	Prince	July 9, 1940
2,254,374	Laukhuff	Sept. 2, 1941