Oct. 11, 1960 D. D. CAMPBELL ET AL 2,955,817

WINDOW REGULATOR MECHANISM

Filed Oct. 10, 1958 4 Sheets-Sheet 1

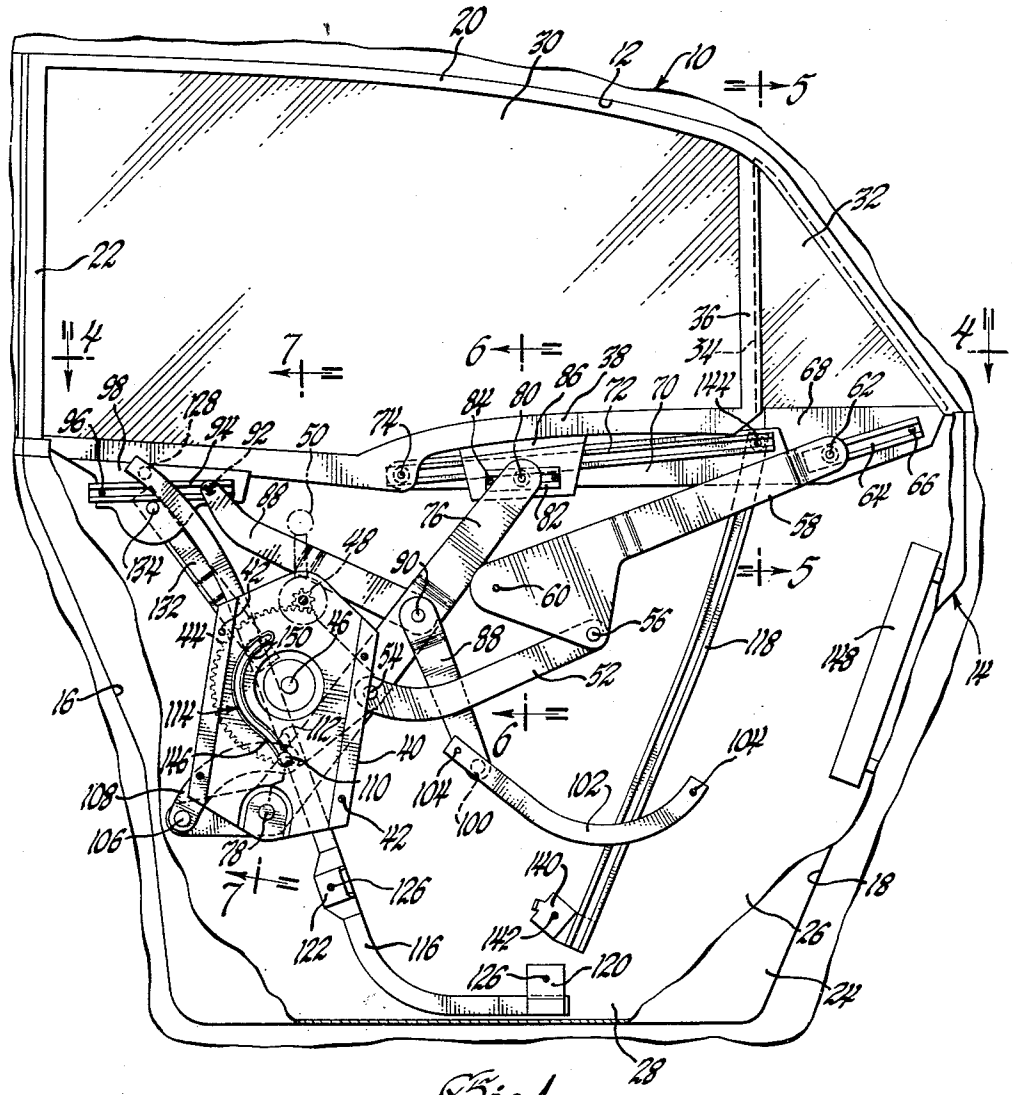

Fig. 1

INVENTORS
David D. Campbell, &
BY Louis P. Garvey
Herbert Thurman
ATTORNEY

Oct. 11, 1960 D. D. CAMPBELL ET AL 2,955,817

WINDOW REGULATOR MECHANISM

Filed Oct. 10, 1958 4 Sheets-Sheet 2

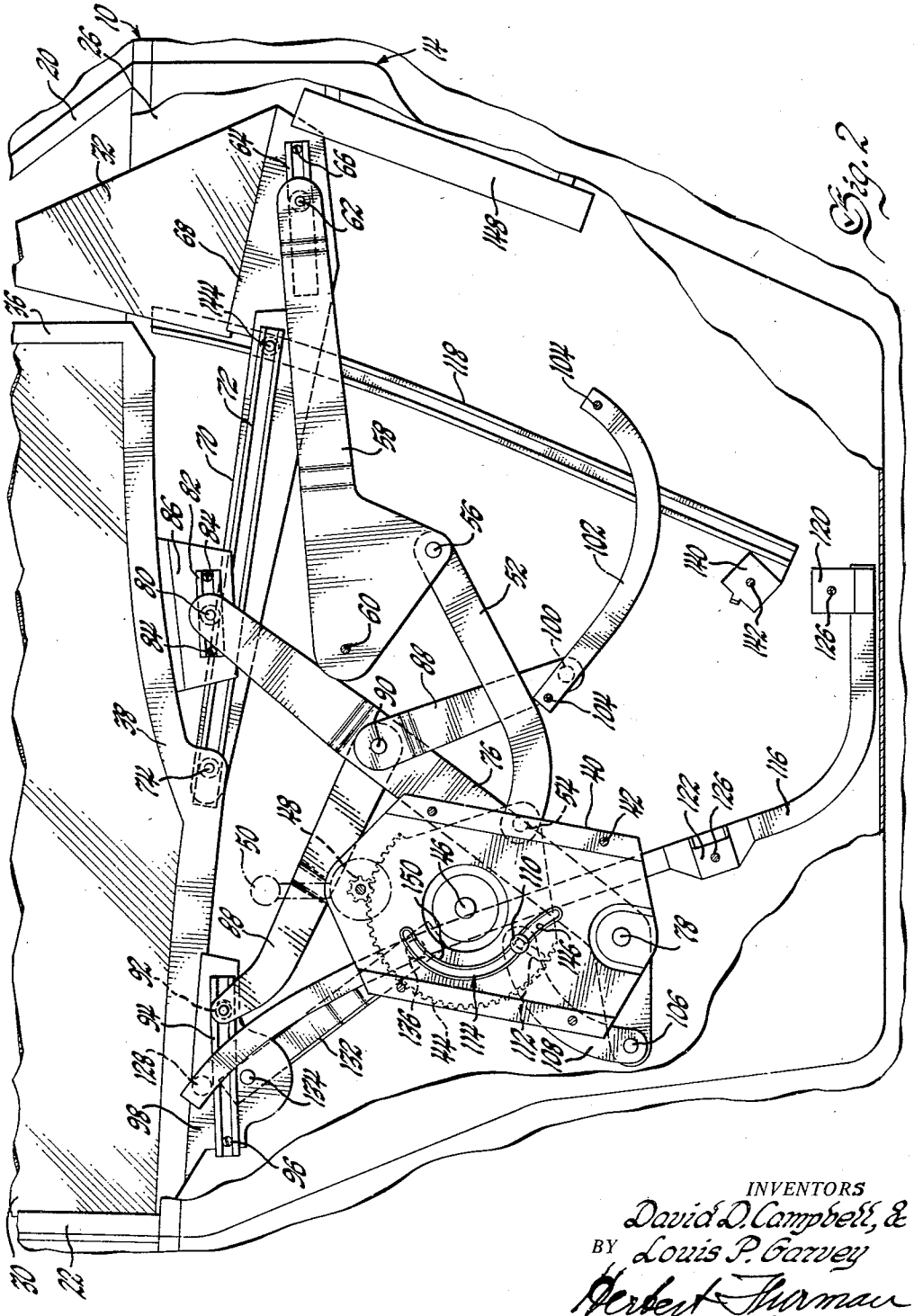

Fig. 2

INVENTORS
David D. Campbell, &
BY Louis P. Garvey
Herbert Thurman
ATTORNEY

Oct. 11, 1960 D. D. CAMPBELL ET AL 2,955,817

WINDOW REGULATOR MECHANISM

Filed Oct. 10, 1958 4 Sheets-Sheet 3

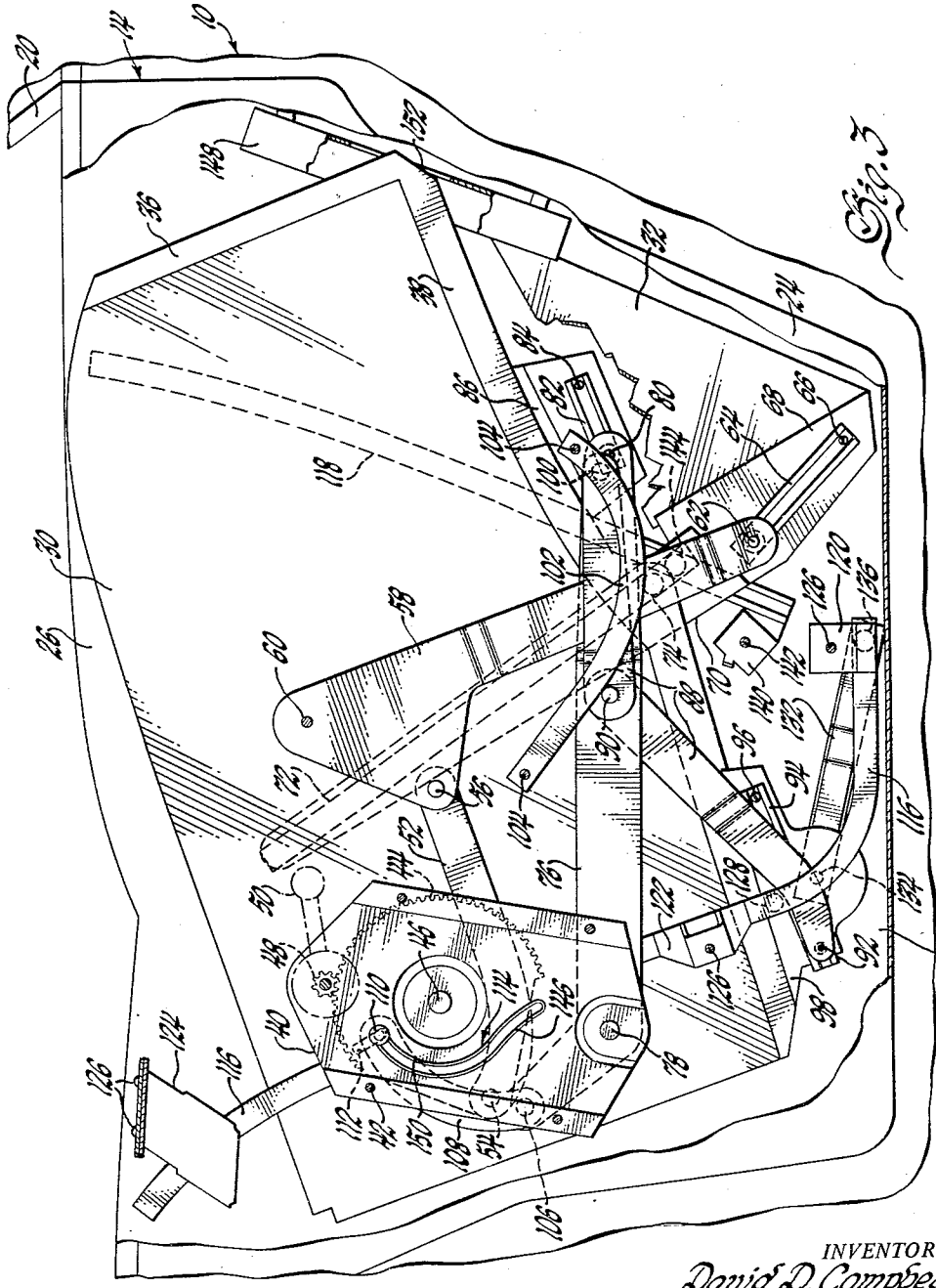

Fig. 3

INVENTORS
David D. Campbell, &
BY Louis P. Garvey
Herbert Thurman
ATTORNEY

Oct. 11, 1960 D. D. CAMPBELL ET AL 2,955,817

WINDOW REGULATOR MECHANISM

Filed Oct. 10, 1958 4 Sheets-Sheet 4

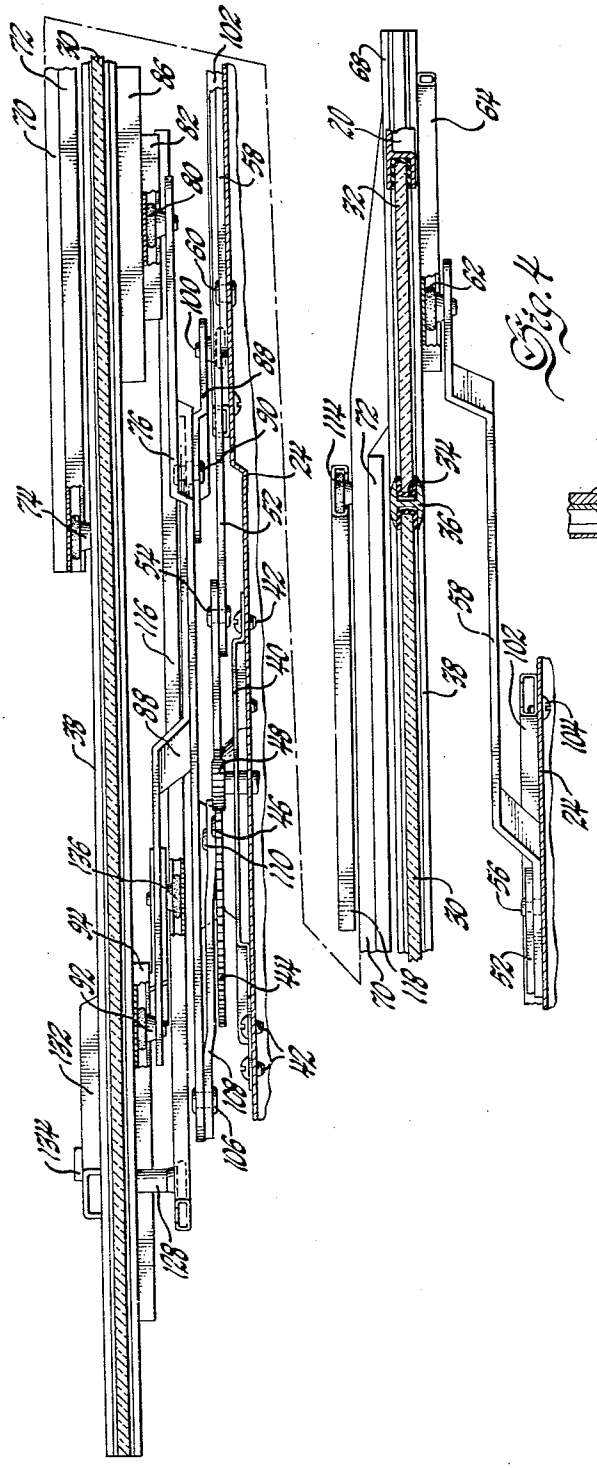

Fig. 4

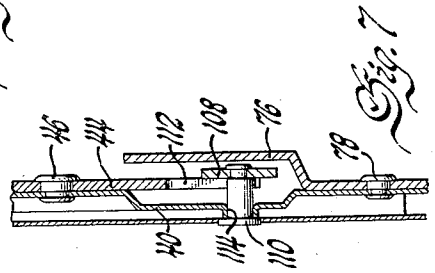

Fig. 7

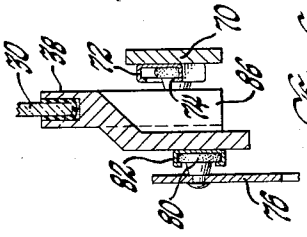

Fig. 6

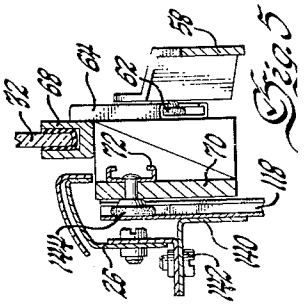

Fig. 5

INVENTORS
David D. Campbell, &
BY Louis P. Garvey
Herbert Sussman
ATTORNEY

United States Patent Office 2,955,817
Patented Oct. 11, 1960

2,955,817

WINDOW REGULATOR MECHANISM

David D. Campbell, Detroit, and Louis P. Garvey, Birmingham, Mich., assignors to General Motors Corporation, Detroit, Mich., a corporation of Delaware

Filed Oct. 10, 1958, Ser. No. 766,466

8 Claims. (Cl. 268—126)

The invention relates to window regulator mechanisms and more particularly to a window regulator mechanism for moving a plurality of vehicle windows between open and closed positions in a predetermined sequence while maintaining the windows in coplanar relationship in all positions thereof.

In certain vehicle bodies, the upper edge portion of the rear window opening extends rearwardly and downwardly on a wide arc to junction with the lower edge portion of the opening, whereby the lower edge portion of the opening is of substantial extent. Thus the window must have a lower edge portion of substantial extent in order to close the opening. The opening to the window well below the window opening is usually of the same length as the length of the lower edge portion of the opening but the length or depth or both of the well may be of a much smaller extent so that it is virtually impossible to store the window within the window well in the open position thereof without having some part of the lower edge portion of the window projecting into the window opening.

In the past this problem has been solved by employing two windows in overlapping relationship. However, since the windows are located in overlapping relationship in all positions thereof, the opening to the storage well had to be of rather large width and this caused difficulties in sealing the opening to the window well and also detracted from the aesthetic appearance of the body.

This invention solves the problem of large window openings and much smaller storage wells by providing a pair of windows to open and close the window opening and a window regulator mechanism for moving the windows between open and closed positions in a predetermined sequence whereby the windows easily fit within the well in the open position thereof and remain in coplanar relationship in all positions thereof. Thus the opening to the window well can be of normal size so as to require normal sealing means and not detract from the aesthetic appearance of the body.

The primary object of this invention is to provide a new and improved window regulator mechanism for moving a plurality of windows between open and closed positions in predetermined sequence while maintaining the windows in coplanar relationship in all positions thereof. Another object of this invention is to provide a new and improved window regulator mechanism for moving a plurality of vehicle windows between a closed position wherein edge portions thereof are located in abutting relationship and an open position wherein one of the windows is disposed below the other of said windows while maintaining the windows in coplanar relationship in all positions thereof. A further object of this invention is to provide an improved window regulator mechanism for pivotally and bodily moving a plurality of vehicle windows between open and closed positions in a predetermined sequence while maintaining the windows in coplanar relationship in all positions thereof.

These and other objects of this invention will be readily apparent from the following specification and drawings, wherein:

Figure 1 is a broken away side elevational view of a vehicle door, from the inside of the body looking outwardly, embodying a window regulator mechanism according to this invention, with the windows being shown in closed position;

Figure 2 is an enlarged view similar to Figure 1 showing one of the windows in a partially open position;

Figure 3 is an enlarged view similar to Figure 1 showing both windows in fully open position;

Figure 4 is a partially broken away view taken along the plane indicated generally by line 4—4 of Figure 1;

Figure 5 is a sectional view taken along the plane indicated generally by line 5—5 of Figure 1;

Figure 6 is a sectional view taken along the plane indicated generally by line 6—6 of Figure 1; and

Figure 7 is an enlarged sectional view taken along the plane indicated generally by line 7—7 of Figure 1.

Referring now particularly to Figure 1 of the drawings, a vehicle body **10** includes a door header **12** which extends rearwardly and downwardly on a rather wide arc. A door **14** is swingably mounted at the forward edge **16** thereof on the body and is latched at the rearward edge **18** thereof to the body. Door **14** includes an upper door window frame member **20** which generally follows the curvature of the door header **12** and a forward door window frame member **22** which extends generally vertically and defines the window opening with member **22**. Frame members **20** and **22** are secured in a suitable manner to the lower portion of the door which includes spaced door inner and outer panels **24** and **26**, respectively, defining a window receiving well **28** opening to the window opening. As can be seen from Figure 1 of the drawings, the lower edge portion of the window opening is of substantial longitudinal extent as compared to the longitudinal extent and depth of well **28** whereby it would be virtually impossible to provide a single one piece window to close the window opening which would fit within the well **28** without having part of the window extend into the window openinng in the open position thereof. In order to solve this problem, this invention provides a pair of door windows **30** and **32** and window regulating mechanism for moving the windows between a closed position, as shown in Figure 1, and an open position, as shown in Figure 3, in a predetermined sequence while maintaining the windows in coplanar relationship in all positions thereof whereby the opening to well **28** is of normal size and can be conventionally sealed. In the closed position of windows **30** and **32**, the upper edge portion of window **30** and the rearward edge portion of the window **32** are received within a suitable channel provided in frame member **20**, the forward edge of the window **30** is received within a suitable channel provided in frame member **22**, and the forward edge of the window **32** is received within a channel **34**, Figure 4, which is provided in a frame member **36** fixedly secured to the rear edge of the window **30** and integral with a frame member **38** which is fixedly secured to the lower edge of the window **30**.

Referring now particularly to Figures 1 and 4 through 7 of the drawings, the window regulating mechanism for moving the windows **30** and **32** between their open and closed positions will now be described. A back plate **40** is bolted at **42** to the door inner panel **24** and a sector gear **44** is pivotally mounted on the back plate at **46**. The sector gear meshes with a pinion **48** which is pivotally mounted on the back plate **40** and the inner panel **24** and operated by the usual manually operable handle **50** which is located interiorly of the body. A

link 52 has one end thereof pivotally secured at 54 to the sector gear and the other end thereof pivotally secured at 56 to an offset bell crank member 58 which is pivotally mounted on the door inner panel 24 at 60. The other end of the bell crank member 58 pivotally mounts a roller 62 which is pivotally and slidably received within an inwardly opening cam channel 64 bolted at 66 to the lower frame member 68 of window 32. Frame member 68 is fixedly secured to the lower edge portion of window 32 and includes an integral forwardly extending arm 70 which fixedly mounts an inwardly opening cam channel 72 pivotally and slidably receiving a roller 74 which is pivotally secured to the lower frame member 38 of window 30. Thus it can be seen that the window 32 is secured to the window 30 by means of the arm 70 and the cam channel and roller 72 and 74, respectively, for both pivotal and bodily movement relative thereto.

An offset bell crank lift arm 76 is pivotally secured to the back plate 40 at 78, with one end of the lift arm mounting a roller 80 which is pivotally and slidably received within an inwardly opening cam channel 82. The cam channel 82 is bolted at 84 to a depending integral extension 86 of frame member 38 and is located inwardly of the cam channel 72 on arm 70. A bell crank balance arm 88 is pivotally secured at 90 to the lift arm 76 intermediate the ends of one leg of the latter, with one leg of the balance arm mounting a roller 92 which is pivotally and slidably received within an inwardly opening cam channel 94. The cam channel 94 is bolted at 96 to another depending integral extension 98 of frame member 38. The other leg of the balance arm mounts a roller 100 which is pivotally and slidably received within an outwardly opening cam channel 102 which is secured to the door inner panel 24 at 104. It can be seen that the cam channel 102 includes a forward linear portion extending generally rearwardly and downwardly within the door well 28 and a rearward arcuate portion extending generally rearwardly and upwardly. The other leg of the lift arm 76 is pivotally secured at 106 to one end of an arcuate link 108, the other end of which mounts a stud or pin 110. The pin 110 etxends through a generally radially disposed linear slot 112 in the sector gear 44 and also a generally ogee shaped slot 114 in back plate 40, and furnishes the driving connection between the sector gear and the lift arm 76 as will be further described.

Since the connections between the balance arm 88 and the lift arm 76 and the window 30 are both pivotal and slidable connections, as well as the connection between the bell crank lever 58 and the window 32 and the connection between the window 32 and the window 30, forwardly and rearwardly disposed guide cam channels 116 and 118 are provided to control shifting movement of the windows 30 and 32, respectively, longitudinally of well 28 during movement of the windows between open and closed positions. The channel 116 opens outwardly of the body and is secured to the door inner panel 24 by a number of brackets 120, 122 and 124, Figure 3, each of which is welded to the base of the channel 116 and bolted at 126 to the door inner panel. Channel 116 pivotally and slidably receives a roller 128 which is secured to extension 98 of frame member 38 and extends inwardly of the body therefrom. The channel 116 is generally of slight ogee curvature, except for the lower end portion thereof which extends generally longitudinally rearwardly of well 28 for a purpose to be hereinafter described. In order to additionally stabilize the window 30 against lateral shifting movement when in a closed or partially closed position, an offset stabilizing arm 132 is pivotally secured at 134 to the outboard side of extension 98, and mounts a roller 136 which is pivotally and slidably received within channel 116 below the roller 128.

Channel 118 opens inwardly of the body and is secured to the door outer panel 26 by brackets 140 which are welded to the base of the channel and bolted at 142 to the outer panel. Channel 118 extends generally forwardly and downwardly and pivotally and slidably receives roller 144 which is secured to the arm 70 of window frame member 68 and extends outwardly therefrom.

Referring now particularly to Figures 1 through 3 of the drawings, the operation of the window regulator mechanism in moving the windows 30 and 32 from their closed position, as shown in Figure 1, to their open position, as shown in Figure 3 will now be described. When the windows 30 and 32 are in their closed position, as shown in Figure 1, the stud 110 of link 108 is at the radially outer end of slot 112 and at the end of the lower portion 146 of slot 114, this portion being arcuately shaped and having its center at the pivot 106 of the link 108 on lever 76. Assume now that the operator rotates the handle 50 in counterclockwise direction to rotate the pinion 48 in the same direction and swing the sector 44 in a clockwise direction about its pivot 46 on the back plate. The slot 112 will cam the pin 110 along the lower portion 146 of slot 114, and since this lower portion of the slot has its center at the pivot 106, no movement will be imparted to the lift arm 76 since link 108 will merely pivot about its pivot 106 on the lift arm without imparting any motion thereto. However, movement of the sector 44 in a clockwise direction will shift the link 52 forwardly and downwardly to swing the lever 58 clockwise about its pivot 60 on the inner panel. As the lever 58 swings in this direction, the engagement of roller 62 with cam channel 64 will shift the window 32 rearwardly and downwardly as the longitudinal shifting movement of the window is controlled by roller 144 and cam channel 118. The roller 74 of arm 70 pivots in the cam channel 72 and moves slightly rearwardly therein, as can be seen from a comparison of Figures 1 and 2 as window 32 moves rearwardly and downwardly within well 28. Thus initially the window 32 is shifted rearwardly and downwardly to a position partially below the rear edge of window 30 to move the forward edge portion of the window 32 out of the channel 34 of window frame member 36. It will be understood, of course, that the windows 30 and 32 remain in coplanar relationship during this initial opening movement of the window 32. Frame member 68 enters a guide channel 148 fixed to the rear wall of door 14 in this position of window 32 to cooperate with rollers 80, 144, and 62 and cam channels 82, 118, and 64 respectively in stabilizing window 32 against lateral shifting movement.

When the window 32 is in its position of Figure 2, the slot 112 of the sector gear has cammed the pin 110 along slot 114 to a position wherein the pin is located at the tangent point between the lower arcuate portion 146 of the slot and the upper arcuately shaped portion 150 thereof which has its center at the pivot 46 of the sector gear 44 on the back plate 40. Thereafter upon continued clockwise swinging movement of the sector gear 44, the slot 112 thereof will cam the pin 110 along the portion 150 of slot 114. This continued swinging movement of the sector gear 44 will continue movement of the window 32 to its open position in the same manner as previously described as the window 32 continues to move downwardly within the well 28 and is shifted forwardly thereof to open position as shown in Figure 3, as roller 144 follows cam channel 118.

As the pin 110 is cammed along the slot 114 beyond the tangent point of portions 146 and 150, the link 108 will be shifted upwardly and rearwardly to in turn swing the lift arm 76 clockwise about its pivot 78 on the back plate 40. As the lift arm 76 swings in this direction, it will shift the rear portion of window 30 downwardly within well 28 as roller 80 both pivots and slides in cam channel 82 and will also shift the balance arm 88 in the same direction. Since the lower end of the balance arm is both pivotal and slidable in channel 102 by means of roller 100, the bal-

ance arm will be rotated counterclockwise about its pivot **90** on lift arm **76** during this movement of the lift arm to shift the forward portion of the window **30** forwardly and downwardly at the same time that the rearward portion thereof is being shifted rearwardly and downwardly by the lift arm **76**, with the longitudinal position of the window being controlled by movement of roller **128** within cam channel **116**. Initially the rear portion of the window **30** moves downwardly and rearwardly at a greater rate than the initial downward and rearward movement of the forward portion of the window to move the window out of the door window frame members **20** and **22**, this being accomplished by the shape of the forward portion of cam channel **102** which extends generally forwardly and upwardly within well **28**. Thereafter the forward portion of the window **30** is swung forwardly and downwardly at a greater rate of travel than the rear portion thereof to dispose the window **30** in an open position within the well as shown in Figure 3. During this movement of the window **30**, it will be understood, of course, that the window **32** continues its movement to open position, as previously mentioned, and the pivotal and slidable connection between the windows provided by roller **74** and cam channel **72** allows each of the windows to pivot and shift independently of each other. The base of the cam channel **148** is slotted at **152** to provide clearance for the lower rear corner of window **30** when in its open position.

When the windows **30** and **32** are in their fully open position within the well **28**, it can be seen that the window **32** is disposed below the rear portion of the lower edge of window **30** and that both windows are located in coplanar relationship with each other and fully within well **28** so that no portion of either window projects above the upper edges of the door inner or outer panels and into the window opening defined by the door upper frame members **22** and **30**.

If it is desired to move the windows **30** and **32** from their open position, as shown in Figure 3, to their closed position, as shown in Figure 1, the reverse sequence will occur and this is believed to be apparent without further description. Briefly, however, the window **30** will now move from its position of Figure 3 to a fully closed position, as shown in Figure 2, ahead of the window **32** so that the window **32** will be disposed in a partially open position, as shown in Figure 2, when the window **30** is in a closed position and will thereafter be moved to a fully closed position, as shown in Figure 1.

Thus this invention provides a new and improved window regulator mechanism for moving a plurality of vehicle windows between open and closed positions with respect to a window opening and maintaining the windows in coplanar relationship in all positions thereof.

We claim:

1. In a vehicle body having a window opening therein, the combination comprising, a first window adapted to open and close one portion of said opening, means mounting said first window on said body for both pivotal and bodily movement relative thereto during movement of said window between open and closed positions, a second window adapted to open and close another portion of said opening, means mounting said second window on said body for both pivotal and bodily movement relative thereto and for maintaining said second window in coplanar relationship with said first window in all positions thereof, and a common operating means operatively connected to said windows for causing said windows to move both pivotally and bodily between their respective open and closed positions in a predetermined sequence.

2. In a vehicle body having a window opening therein and a window well having an upper entrant portion opening to said window opening and being of a length less than the length of said window opening, the combination comprising, a pair of coplanar windows adapted to open and close said window opening and to be stored within said well in the closed position thereof, the combined length of said windows being greater than the length of the upper entrant portion of said well, means mounting each of said windows on said body for both pivotal and bodily movement relative thereto during movement of said windows between open and closed positions and for maintaining said windows in coplanar relationship in all positions thereof, a common operating means, and means operatively connecting said operating means to said windows for causing said windows to move both pivotally and bodily between their respective open and closed positions in a predetermined sequence so as to be stored within said well one above the other.

3. In a vehicle body having a window opening therein, the combination comprising, a first window adapted to open and close one portion of said window opening, means mounting said first window on said body for both pivotal and bodily movement relative thereto, a second window adapted to open and close another portion of said opening, means pivotally and slidably mounting said second window on said first window for both pivotal and bodily movement relative thereto and for maintaining said second window in coplanar relationship with said first window in all positions thereof, means controlling sliding movement of said second window relative to said first window, and a common operating means operatively connected to said windows for causing said windows to move both pivotally and bodily between their respective open and closed positions in a predetermined sequence.

4. In a vehicle body having a window opening therein, the combination comprising, a first window adapted to open and close one portion of said window opening, means mounting said first window on said body for both pivotal and bodily movement relative thereto, a second window adapted to open and close another portion of said opening, means mounting said second window on said first window for both pivotal and bodily movement relative thereto and for maintaining said second window in coplanar relationship with said first window in all positions thereof, means controlling bodily movement of said second window relative to said first window and causing said second window to move pivotally and bodily longitudinally underneath said first window upon movement of said second window toward open position, a common operating means, and means operatively connecting said operating means to said windows for causing said second window to move pivotally and bodily longitudinally underneath said first window while maintaining said first window in the closed position thereof.

5. In a vehicle body having a window opening therein, the combination comprising, a first window adapted to open and close one portion of said window opening, a second window adapted to open and close another portion of said opening, means pivotally and slidably mounting said second window on said first window for both pivotal and bodily movement relative thereto, means controlling sliding movement of said second window relative to said first window and maintaining said second window in coplanar relationship with said first window in all positions thereof, and operating means operatively connected to said second window for causing said window to move both pivotally and bodily between its respective open and closed positions.

6. In a vehicle body having a window opening therein, the combination comprising, a first window adapted to open and close one portion of said window opening, means mounting said first window on said body for both pivotal and bodily movement relative thereto, a second window adapted to open and close another portion of said opening, means pivotally and slidably mounting said second window on said first window for both pivotal and bodily movement relative thereto and for maintaining said second window in coplanar relationship with said first window in all positions thereof, guide means, means operatively connecting said second window to said guide

means for controlling sliding movement of said second window relative to said first window, and a common operating means operatively connected to said windows for causing said windows to move both pivotally and bodily between their respective open and closed positions in a predetermined sequence.

7. In a vehicle body having a window opening therein, the combination comprising, a first window adapted to open and close one portion of said window opening, means mounting said first window on said body for both pivotal and bodily movement relative thereto, a second window adapted to open and close another portion of said opening, means mounting said second window on said first window for both pivotal and bodily movement relative thereto and for maintaining said second window in coplanar relationship with said first window in all positions thereof, means controlling bodily movement of said second window relative to said first window and causing said second window to move pivotally and bodily longitudinally underneath said first window upon movement of said second window toward open position, a common operating means, and means operatively connecting said operating means to said windows for causing said second window to move pivotally and bodily longitudinally underneath said first window while said first window moves to the open position thereof.

8. In a vehicle body having a window opening therein, the combination comprising, a first window adapted to open and close one portion of said window opening, means mounting said first window on said body for both pivotal and bodily movement relative thereto, a second window adapted to open and close another portion of said opening, means mounting said second window on said first window for both pivotal and bodily movement relative thereto and for maintaining said second window in coplanar relationship with said first window in all positions thereof, means controlling bodily movement of said second window relative to said first window and causing said second window to move pivotally and bodily longitudinally underneath said first window upon movement of said second window toward open position, a common operating means, means operatively connecting said operating means to said second window for causing said second window to move pivotally and bodily longitudinally underneath said first window, and second means operatively connecting said first window to said operating means, said second means including delay means for maintaining said first window in the closed position thereof during a portion of the movement of said second window.

References Cited in the file of this patent

UNITED STATES PATENTS

2,122,963	Susor	July 5, 1938
2,863,658	Moyes	Dec. 9, 1958