E. E. CLEMENT.

ELECTRICAL COOKER.

APPLICATION FILED SEPT. 16, 1911.

1,188,734.

Patented June 27, 1916.

8 SHEETS—SHEET 1.

Fig. 1.

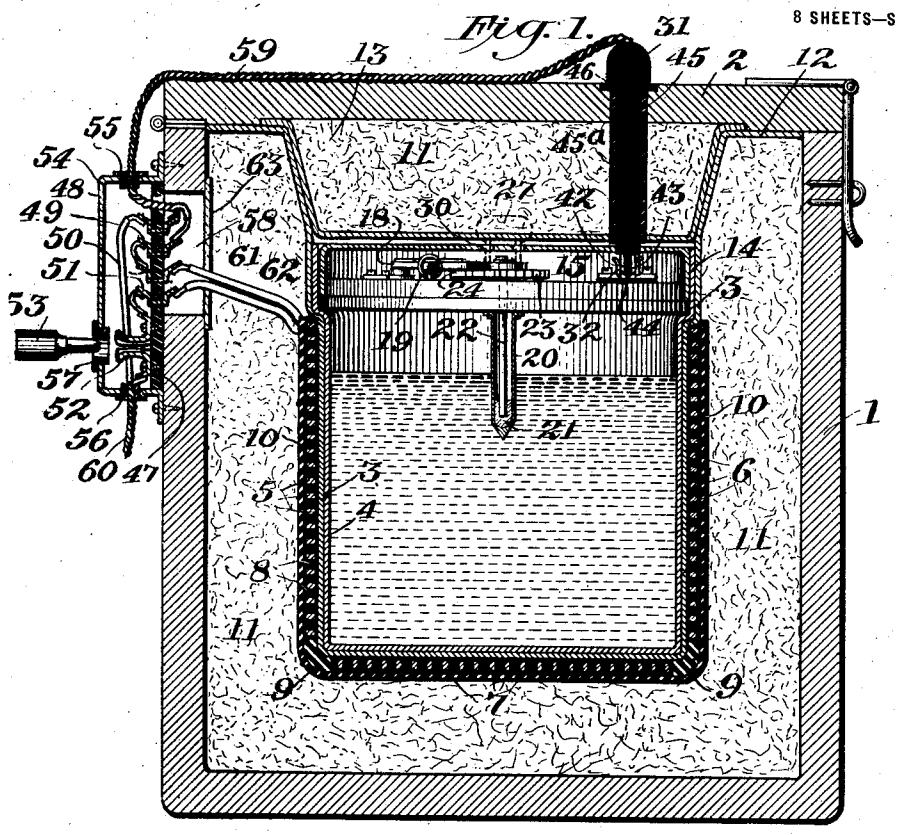

Fig. 3.

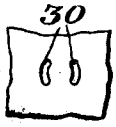

Fig. 2.

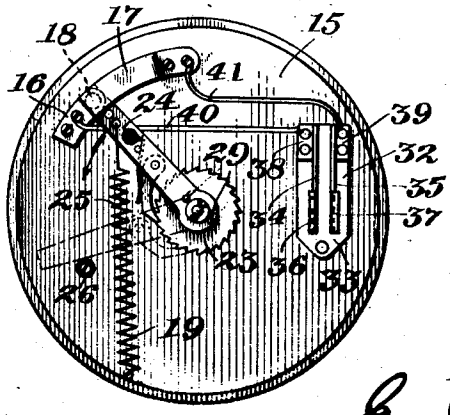

Fig. 4.



Witnesses:

H. F. Lowenstein.

G. E. Ruff

Inventor:

Edward E. Clement

E. E. CLEMENT.

ELECTRICAL COOKER.

APPLICATION FILED SEPT. 16, 1911.

1,188,734.

Patented June 27, 1916.

8 SHEETS—SHEET 2.

Fig. 5

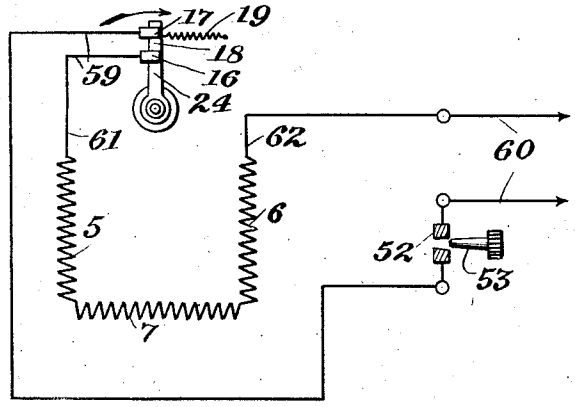

Fig. 7

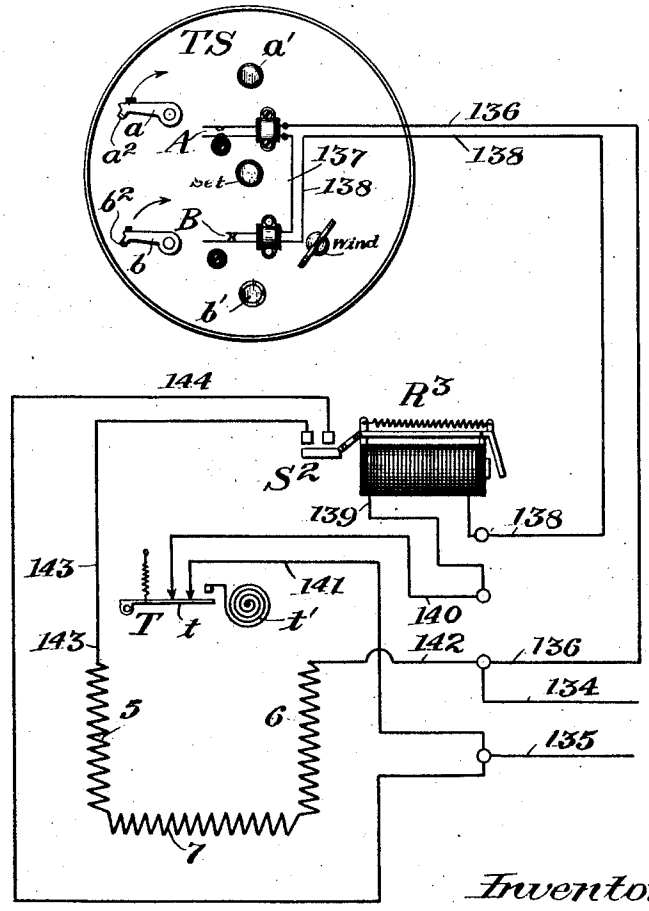

Witnesses:

H. B. Lowenstein

G. E. Ruff

Inventor:

Edward E. Clement

E. E. CLEMENT.

ELECTRICAL COOKER.

APPLICATION FILED SEPT. 16, 1911.

1,188,734.

Patented June 27, 1916.

8 SHEETS—SHEET 3.

Fig. 6.

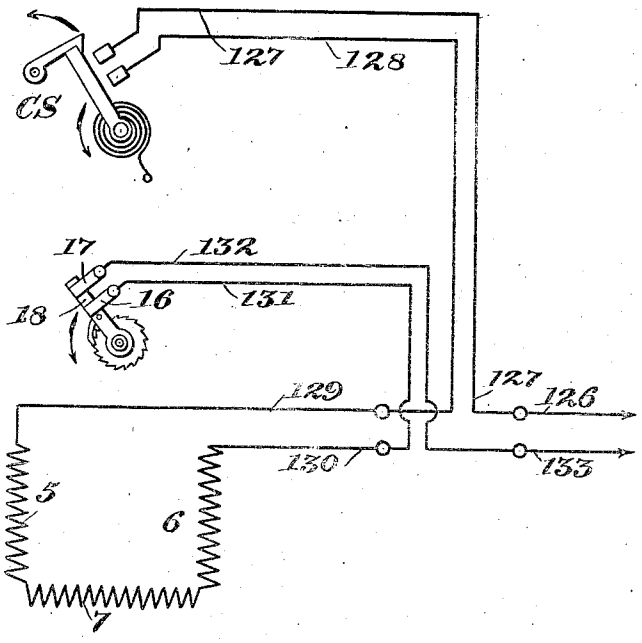

Fig. 14.

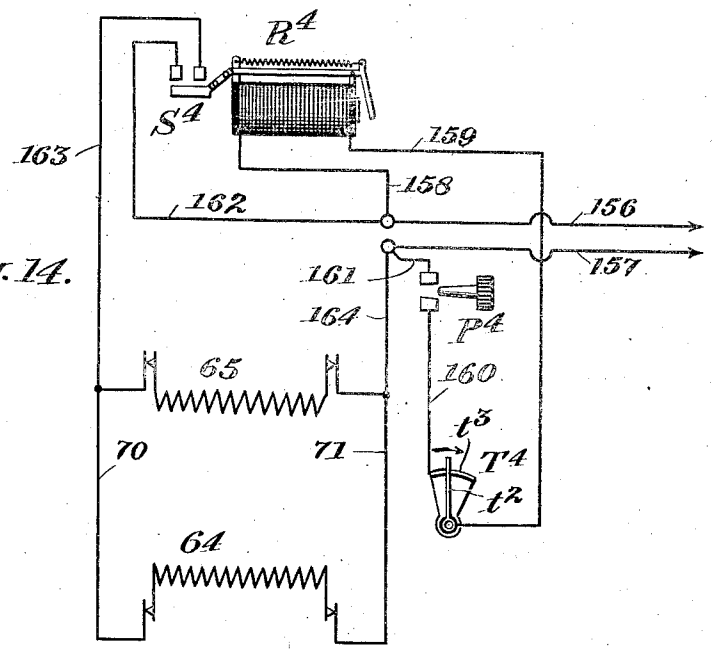

Witnesses:
H. H. Löwenstein.
G. E. Ruff

Inventor:
Edward E. Clement

E. E. CLEMENT.

ELECTRICAL COOKER.

APPLICATION FILED SEPT. 16, 1911.

1,188,734. Patented June 27, 1916.

8 SHEETS—SHEET 4.

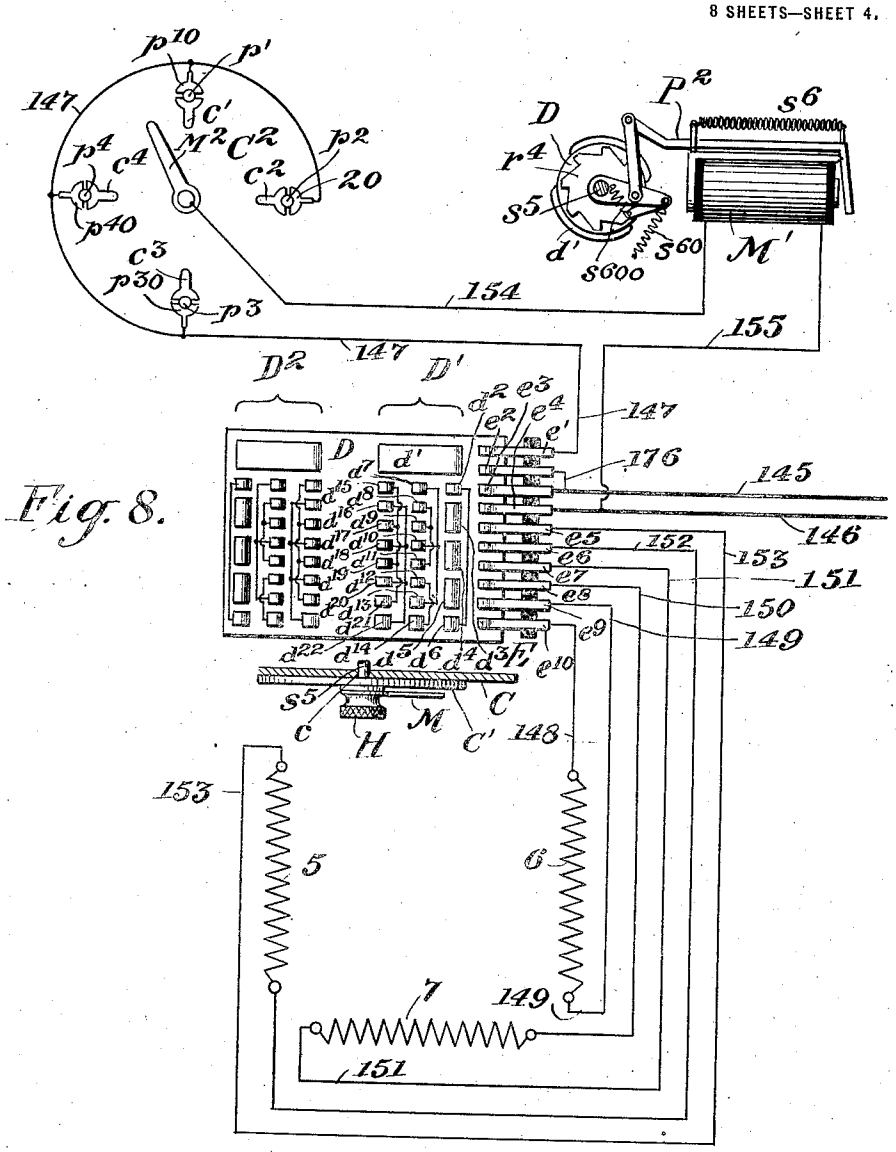

Fig. 8.

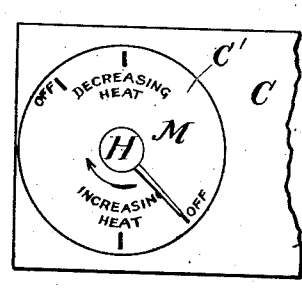

Fig. 9.

Witnesses

H. F. Löwenstein.

G. E. Ruff

Inventor

Edward E. Clement

E. E. CLEMENT.

ELECTRICAL COOKER.

APPLICATION FILED SEPT. 16, 1911.

1,188,734.

Patented June 27, 1916.

8 SHEETS—SHEET 5.

Fig. 10.

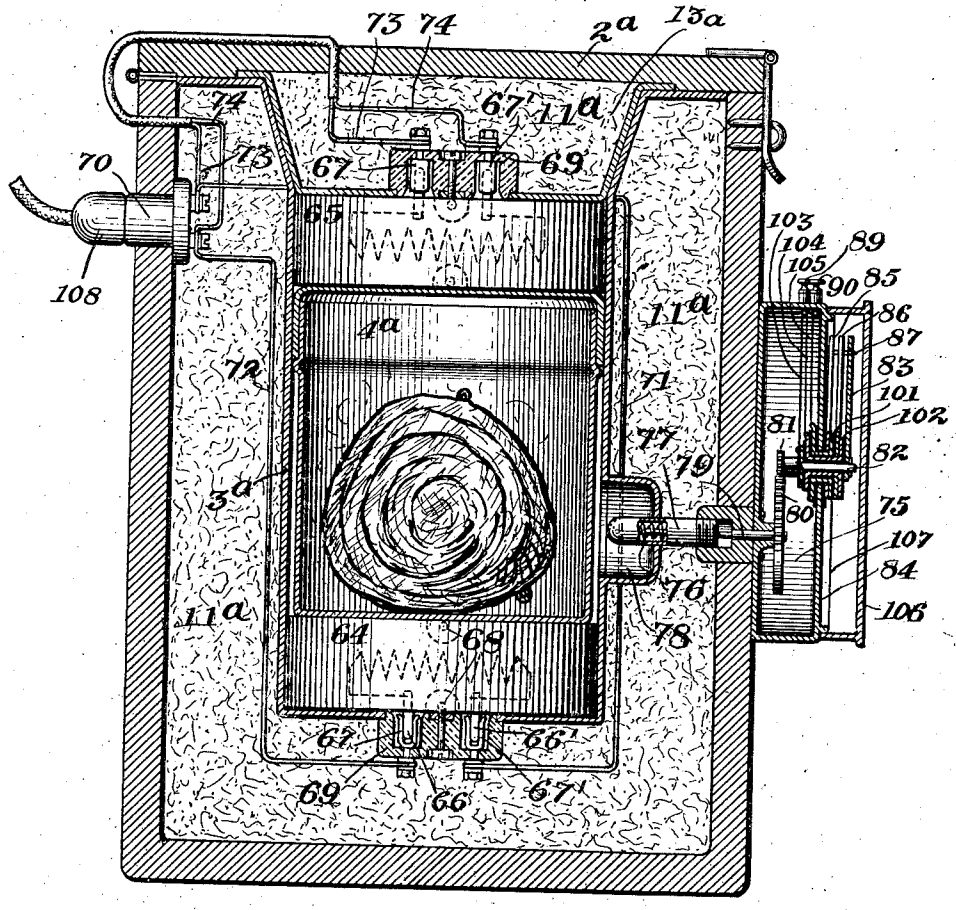

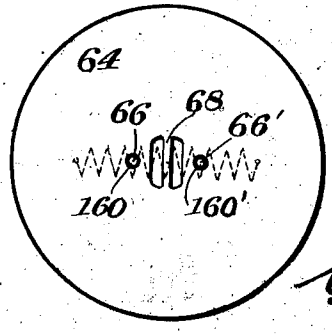

Fig. 11.

Witnesses:
H. F. Bowenstein.
G. E. Ruff

Inventor:
Edward E. Clement

E. E. CLEMENT.

ELECTRICAL COOKER.

APPLICATION FILED SEPT. 16, 1911.

1,188,734.

Patented June 27, 1916.

8 SHEETS—SHEET 6.

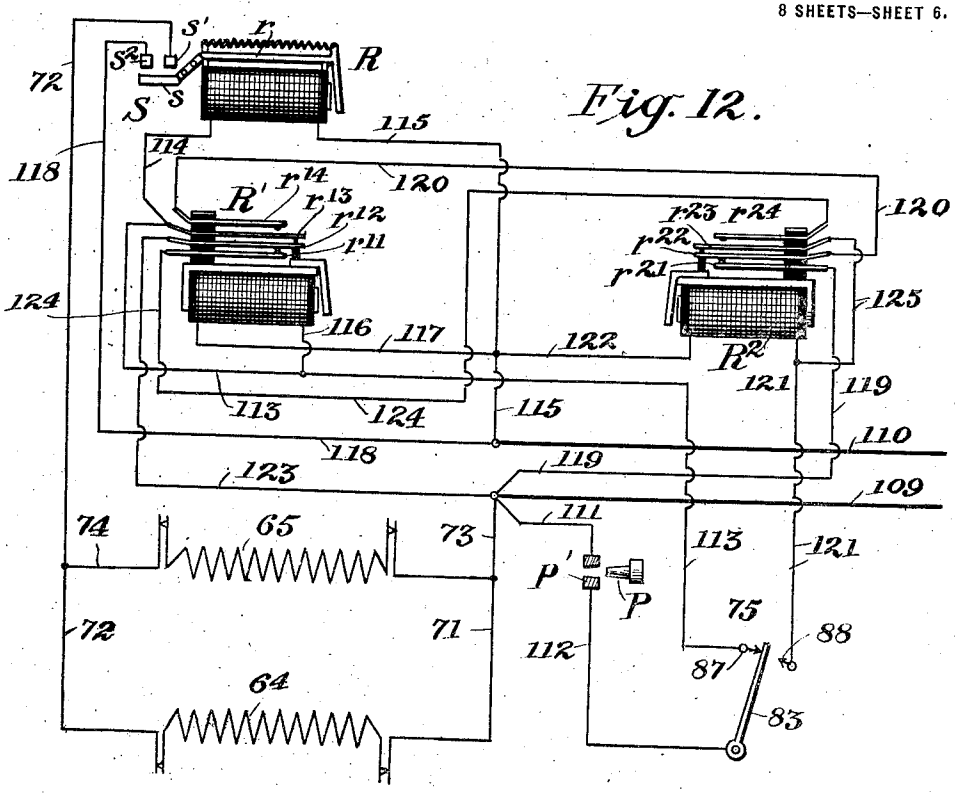

Fig. 12.

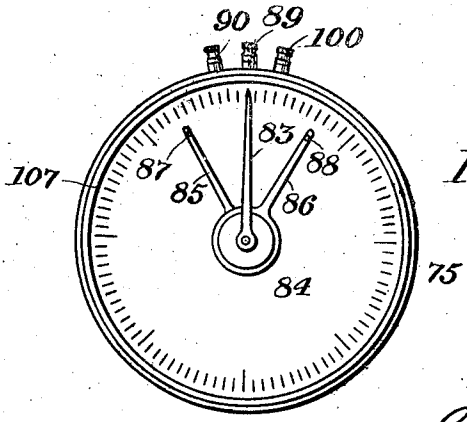

Fig. 13.

Witnesses

H. E. Loewenstein

G. E. Ruff

Inventor

Edward E. Clement

E. E. CLEMENT.

ELECTRICAL COOKER.

APPLICATION FILED SEPT. 16, 1911.

1,188,734.

Patented June 27, 1916.

8 SHEETS—SHEET 7.

Fig. 15.

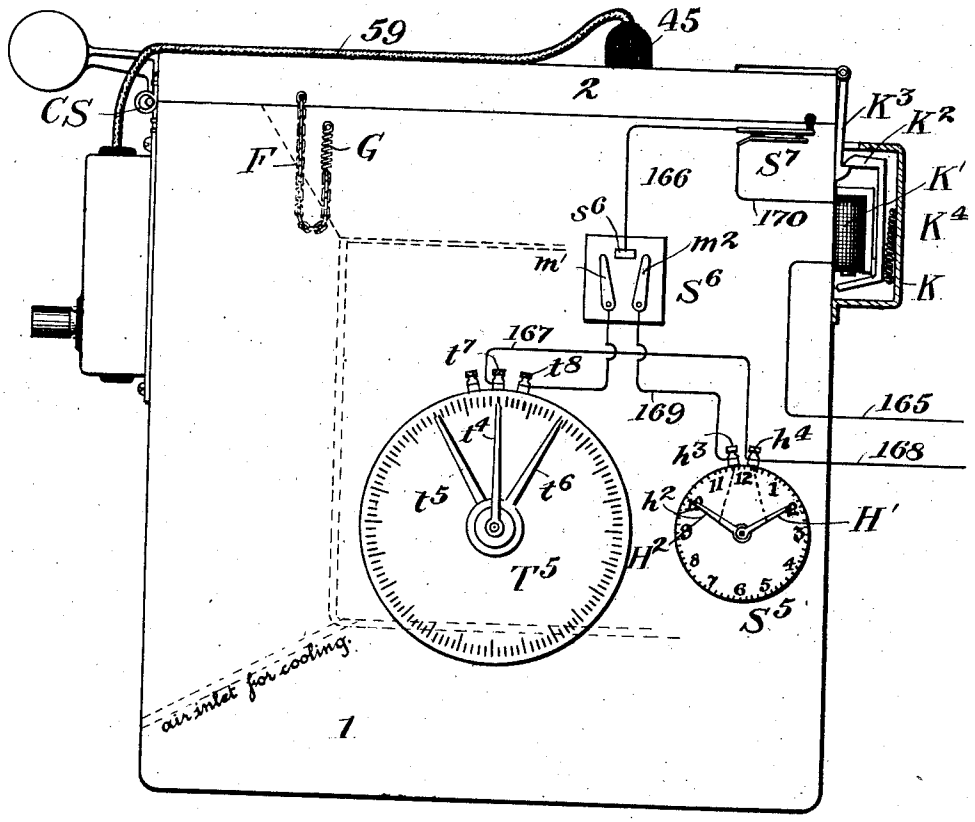

Witnesses

H. Howenstein

G. E. Ruff

Inventor

Edward E. Clement

E. E. CLEMENT.

ELECTRICAL COOKER.

APPLICATION FILED SEPT. 16, 1911.

1,188,734.

Patented June 27, 1916.

8 SHEETS—SHEET 8.

Fig. 16.

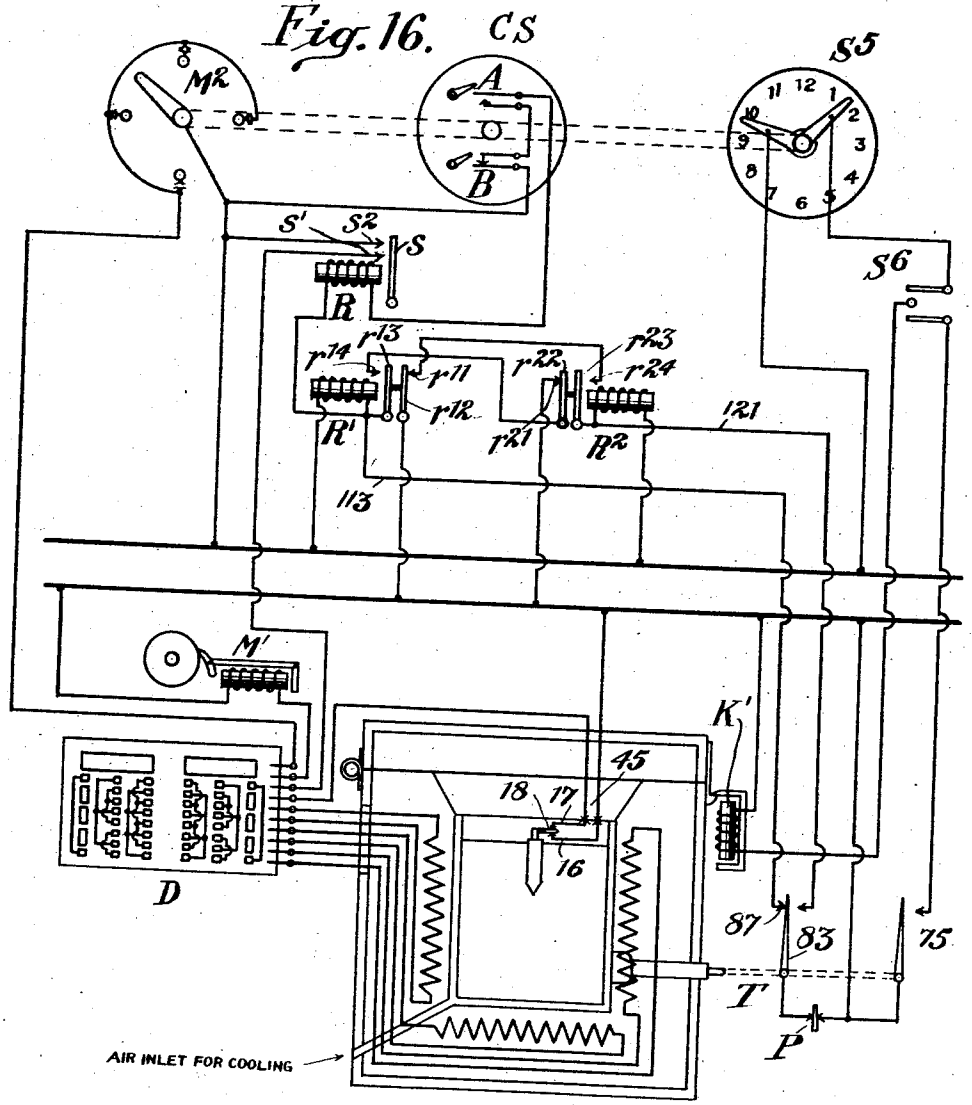

Witnesses

H. B. Wentten.

James H. Marr

Inventor

Edward E. Clement

UNITED STATES PATENT OFFICE.

EDWARD E. CLEMENT, OF WASHINGTON, DISTRICT OF COLUMBIA.

ELECTRICAL COOKER.

1,188,734. Specification of Letters Patent. Patented June 27, 1916.

Application filed September 16, 1911. Serial No. 649,759.

To all whom it may concern:

Be it known that I, EDWARD E. CLEMENT, a citizen of the United States, residing at Washington, in the District of Columbia, have invented certain new and useful Improvements in Electrical Cookers, of which the following is a specification, reference being had therein to the accompanying drawing.

My invention relates to electric heating apparatus, and especially cooking devices, and has for its object the improvement thereof in the particulars hereinafter set forth.

In so called "fireless cookers", which are common and well known in the market, heat insulating inclosures are provided for cooking utensils, the contents of which are first brought to any desired temperature by the application of heat from an external source. Such devices are efficient to a certain degree, in themselves, but their use is economical only when a source of heat is employed which can be turned on and off at pleasure, such as a gas or oil flame.

According to my present invention, I am able to have all external sources of heat dispensed with, and moreover render the operation of the cooker automatic and mathematically accurate. To achieve the first end, I employ electrical heating devices either permanently or temporarily located in the insulated and inclosed chambers; in order to attain the second end, I provide means for controlling the current with respect both to its time of flow and the temperature produced.

Briefly stated my invention comprises the following leading features: (1) an inclosure having heavy insulating walls, bottom and top, containing one or more chambers adapted to receive cooking utensils and the material to be treated therein; each of these chambers being provided with one or more heating elements with circuit connections passing out through the walls of the inclosure to a suitable switch, whereby material can be placed in the chamber, and its temperature raised without loss by merely closing the circuits; (2) a thermostatic device responsive to heat within such chamber (preferably to the internal temperature of the material therein), and adapted to cut off the current supply when this temperature has reached a predetermined point; (3) clock controlled switching means for supplying current to the heating elements at a predetermined time or times; (4) the combination of time switch and thermostatic control whereby current may be switched on at a predetermined time, cut off when the temperature has reached a predetermined point, and the cooking operation permitted to proceed for a definite predetermined period of time; (5) thermostatic control arranged so that current may be cut on as well as cut off automatically, in response to variations in temperature, so as to compensate for the same and maintain absolute uniformity during any desired period of time; (6) variable grouping and arrangement of the heating elements so as to produce different temperatures and "quick" and "slow" heats, according to the nature of the material to be treated and the character of the process; (7) means for cutting off the supply of current and opening the inclosure so as to cool the contents, at a predetermined temperature, or a predetermined time, or both.

My invention is illustrated in the accompanying drawings in which:—

Figure 1 is a transverse section of one form of cooker fitted with a vessel having a hollow lid containing the automatic cut-off. Fig. 2 is a plan view of the body of the lid with its top removed showing the cut-off in plan. Fig. 3 is a detail view of the key slots in the top of the lid. Fig. 4 is a side view of the key. Fig. 5 is a diagram of the circuits of Fig. 1. Fig. 6 is a diagram of modified circuits applicable to the device of Fig. 1 and having clock controlled means for cutting on the heating current. Fig. 7 is a diagram of circuits applicable to the device of Fig. 1 provided with clock and thermostatic control. Fig. 8 is a diagram showing circuits equipped with means for variably grouping and arranging heating elements so as to produce different temperatures and "quick and slow" heats. Fig. 9 is a bottom plan view of the indicator dial for the form of Fig. 8. Fig. 10 is a transverse section of a modified form of cooker fitted with massive heating elements and a thermostat for maintaining a constant temperature. Fig. 11 is a plan view of one of the heating elements in Fig. 10. Fig. 12 is a diagram of the preferred form of circuit for Fig. 10. Fig. 13 is a face view of the thermostat dial in Figs. 10 and 12. Fig. 14 is a diagram showing a

very simple form of circuit applicable to the device of Fig. 10. Fig. 15 is a diagram showing means for cutting off the supply of current and opening the inclosure so as to cool the contents, at a predetermined temperature or a predetermined time, or both. Fig. 16 is a diagrammatic showing of the system as a complete whole.

Referring to Fig. 1, the embodiment here shown consists of an outer casing or box 1 provided with a hinged cover 2 and a hasp and staple for locking the same. In the center of this casing is located the heating chamber with its walls 3 enameled on the outer side and bottom, and adapted to receive a cooking utensil 4 and to make thermal contact therewith. Surrounding the chamber 3 on either side and bottom thereof and insulated therefrom by the enamel, are heating coils or grids 5, 6 and 7 held in place by the strips 8, corner blocks 9, and outer shell 10, all of insulating material. Surrounding this outer shell of insulation and the upper extension of the chamber 3 is a packing 11 of heat insulating material such as a mixture of asbestos and magnesia or the like. The upper extension of the vessel is blocked out to form a flat horizontal rim 12 which serves as a cover for the packing space. Attached to the lid 2 is a downwardly projecting muffler 13 also packed with heat insulating material 11 and adapted to fit into the enlarged upper extension of the heating chamber 3. The muffler 13 is in the form of a frustum of a cone so that it will swing into place without binding. The upper portion of the cooking utensil 4 is increased in diameter so as to form an annular recess 14 to receive a hollow lid 15, shown in plan view with the top removed in Fig. 2. This lid is provided with a heat responsive, circuit controlling device which may be and is shown as in the nature of a thermal cut-off having a pair of contacts 16—17 connected by a bridging member 18 held in its connective position, against the tension of a spring 19, by a fusible lock. The fusible lock consists of a tube 20 rigidly connected to the bottom of the lid 15 and closed at its lower end which extends into the substance to be cooked. In the lower end of the tube is a small quantity of alloy 21 which will fuse at a given temperature. A rod 22 is placed in the tube in such a manner that its lower end will be immersed in the fusible alloy 21. The rod 22 projects up through the base of the lid and is fitted near its upper end with a ratchet disk 23 to which it is rigidly connected. Above the ratchet 23 and loosely journaled on the rod 22 is an arm 24 which carries a bridging member 18, and is held against the tension of the spring 19 in fixed relation to the ratchet 23 by a pawl 25. The contacts 16—17 remain thus closed by the bridging member 18 so long as the alloy 21 is in a solid condition. However, when the temperature of the contents of the cooking utensil reaches a predetermined point the alloy 21 is fused which loosens the rod 22 and leaves the ratchet 23 and arm 24 free to move under the tension of spring 19, until the arm 24 reaches the limiting stud 26 and assumes the position indicated in dotted lines in Fig. 2. This breaks the connection between the contacts 16—17 which are included in series in the heating circuit to be described later. After the fusible metal 21 has cooled down and assumed its solid condition, the arm 24 may be reset by a special key 27 shown in full lines in Fig. 4, and in dotted lines in Fig. 1, said key being provided with tines 28 which fit into holes 29, in the arm 24. Arc-shaped key slots 30 are provided in the top of the lid, shown in section in Fig. 1 and in plan in Fig. 3. Circuit connections are made with the switching device just described by means of a plug and jack 31 and 32 respectively. The jack consists of an insulating base 33 upon which are mounted the springs 34 and 35 provided at one end with flaring contact blades 36 and 37, and at the other end with binding flanges 38 and 39, the latter being connected to the contact springs 16 and 17 by the insulated conductors 40 and 41 respectively. The plug 31 consists of two metal contact blades 42 and 43 insulated and spaced apart from each other by a fiber strip 44 and surrounded by a rectangular casing of insulating material 45 which forms the body of the plug. The upper portion of the plug is enlarged to form a limiting shoulder 46 which engages the upper flange of a rectangular bushing 45^a. Circuit connections are made from the blades 42 and 43 through the usual flexible conductor such as the twisted pair 59. In order that the plug may remain in during the raising and lowering of the cover, I may make the jack springs 34, 35 long and flexible so as to compensate for the lateral component of movement of the plug, or I may make the jack springs more rigid and set the blades 36, 37 at right angles to the axis of the cover hinge so that the plug will slide between them longitudinally. For convenience in making electrical connections and to protect the same from dust and mechanical injury I provide at the rear of the casing 1, a terminal block 47 of insulating material having terminal clips 48, 49, 50 and 51, embedded therein and a split socket 52 adapted to receive a plug 53, mounted upon its outer face, the whole housed by a metal casing 54 having bushings 55 and 56 to accommodate the circuit leads and a larger bushing 57, concentric with the split socket 52, through which the plug 53 is inserted. An opening 58 is provided at the rear of the casing 1 to receive

the inwardly projecting ends of the terminal clips, and affords a space for slack wire so that the terminal block may be partially withdrawn without affecting connections. A partition 63 of thin board or fiber covers the inner side of the opening 58 to prevent the entrance of packing material. Leads 61 and 62 pass through an aperture in the partition 63 and connect the terminal clips 50 and 51, respectively, to the terminals of the heating coils. The twisted pair 59 passes in through the bushing 55, and an aperture in the terminal block, to the inner ends of clips 48 and 49. The split socket and the outer ends of the terminal clips are connected as shown, completing a series circuit through the heater and controlling devices. Assuming that the plug 53 is inserted in socket 52, this circuit may be traced from the duplex lead 60 through socket and plug connection 52—53, clip 51, lead 62, heating coils 5, 6 and 7, lead 61, clips 50 and 49, one member of twisted pair 59, blade 42 of plug 31, jack spring 34, 40, 16, 18, 17, 41, spring 35, blade 43, back over the other member of twisted pair 59 to clip 48 and thence out over the duplex lead 60. The circuit just traced is shown reduced to a simple diagram in Fig. 5, which shows the circuit controlling devices 24 and 53 in series with the heating coils 5, 6, and 7.

The operation of the embodiment shown in Figs. 1 and 2 is as follows: The vessel 4 having been filled with the substance to be cooked and placed within the heating chamber, the tines of the key 27 are inserted through openings 30, in the cover 15, into the holes in arms 24, and turned until the arm is set in the position shown in Fig. 2, where it is held by the pawl 25 in fixed relation to the ratchet 23, said ratchet being held in fixed relation to the bottom of the cover by virtue of the fusible metal 21 being cool and in its solid state. The cover 2 is then closed down and the plug 31 inserted assuming the position shown in Fig. 1. Upon the insertion of the plug 53 current will flow and the contents of the vessel 4 will be heated until a predetermined temperature is reached, whereupon the heating current is cut off, and the cooking proceeds by conserved heat in the vessel and contents, the leakage of which is very slow by reason of the insulation provided.

Fig. 6 shows another form of circuit to be used with the device of Fig. 1 and differs from Fig. 5 only in that a clock controlled switch CS is substituted for the plug and socket 52—53 so that the cooker may be charged and set to begin heating at a predetermined time. Upon the closure of switch CS, a circuit is completed through the thermostat and heating elements in series which may be traced as follows: line wire 126, 127, CS, 128, 129, 5, 7, 6, 130, 131, 16, 18, 17, 132, and back over line wire 133. The completion of this circuit puts the device under the control of the automatic circuit breaker before described.

Fig. 7 shows another circuit to be used with the device of Fig. 1, including an off-and-on automatic time switch TS and a thermostat T for maintaining constant temperature, both of which control the circuit of the heating elements 5, 6, and 7, through the intermediation of a common relay R^3 adapted when actuated to close the switch S^2. The time switch TS may be any one of several types having circuit closing and circuit opening switches capable of being set to operate at different times, respectively. In the form shown it consists of a clock provided with the usual winding and setting means and having mounted on its back make and break contact springs A and B, respectively. The contact A is adapted to be closed by the arm *a* which swings over in the direction of the arrow upon being released. Similarly, the contact B is opened by the arm *b*. *a'* and *b'* are setting heads which have the usual indicating dials on the face of the clock and control the release of the arms *a* and *b*, respectively. The arms *a* and *b* have finger holds a^2 and b^2 to facilitate their being turned back into the set position as shown. The heating elements 5, 7 and 6 are connected across the line wires, 134 and 135, in series with the contacts of switch S^2. The thermostat T, relay R^3, and contacts A and B are connected in series across the line in a separate circuit. To operate the device with this circuit, the cooker is charged as before described and the setting heads *a'* and *b'* are set at the desired time limits of the cooking period, respectively. At the particular point of time at which *a'* is set, the arm *a* will be released and will close contact A energizing relay R^3 by current over the following path: line wire 134, 136, contact A, 137, contact B, 138, R^3, 139, 140, *t*, 141 and back over line wire 135. The actuation of relay R^3 closes the switch S^2 and current flows through heating elements 5, 6, and 7, over the following path: line wire 134, 142, 6, 7, 5, 143, S^2, 144, and back over line wire 135. When the temperature rises above a fixed point the thermal spring *t'* becomes warped sufficiently to push down the bridging member, thus opening the circuit of relay R^3 which in turn opens the circuit of the heating elements at S^2 and cuts off the heat supply. When the temperature falls below the fixed point the spring *t'* retracts and the circuit of R^3 is again completed which reëstablishes heating circuit in the manner as before described. The temperature is thus kept constant until the particular time at which *b'* is set, whereupon arm *b* will be released, opening contact B and deënergizing R^3

which in turn opens the circuit of the heating elements after which cooking is finished only by conserved heat.

Referring to Figs. 8 and 9 I have shown therein still another arrangement for temperature control to be used with the device of Fig. 1. D is the surface of a drum which carries two sets of commuting segments D^1 and D^2 and for the sake of clearness is shown developed in a plane. The drum D is fixed to a shaft s^5 journaled in the walls of a suitable casing, a portion of such casing being shown at C, Figs. 13 and 14. The shaft s^5 projects through to the front of the casing where it is fitted with a knurled head H which carries an indicating hand M adapted to sweep over a dial plate C', said dial having legends and indicating marks thereon. Coöperating with the commutating segments is a strip of wipers E. Secured on one end of the shaft s^5 is a ratchet r^4 operated by a pawl and magnet, P^2 and M' respectively, in such manner that each deënergization of the magnet rotates the drum through an angle equal to that subtended by the longitudinal rows of segments and which is one-half the distance between the groups D^1 and D^2. Magnet M' is energized at certain regular intervals through a clock controlled commutator C^2, consisting of a constantly rotating wiper arm M^2 adapted to engage at such regular intervals with the contacts c', c^2, etc., said contacts being connected in multiple to a common wire 147 through plugs p', p^2, etc., and split sockets p^{10}, p^{20}, etc. The function of the two groups of commutating segments D^1 and D^2 is to vary the circuit connections of the heating elements so as to produce an increasing or a decreasing temperature respectively, and for this purpose they are insulated on the drum and connected together as indicated. The operation is as follows: For an increasing temperature knurled head H is turned until the hand M points to the mark opposite the legend "Increasing temperature" which brings the segments d^1, d^2, d^3, d^4, d^5, d^6, under the wipers E and completes a circuit through the heating elements 5, 6, and 7 in series. This circuit may be traced from line wire 145 through wiper e^3, segments d^2, d^6, wiper e^{10}, 148, 6, 149, e^9, d^5, e^8, 150, 7, 151, e^7, d^4, e^6, 152, 5, 153, e^5, d^3, e^4 and back over line wire 146. These circuit conditions are maintained until the arm M^2 engages the magnet M^1 as follows: line wire 145, 176, wiper e^2, segment d^1, 147, p^1, c^1, M^2, 154, M^1, 155 and back over line wire 146. The energization of M^1 withdraws the pawl P^2 from the ratchet against the tension of the springs s^6, s^{60}, s^{600}, and upon the subsequent deënergization of M^1, as arm M^2 passes on, these springs actuate the pawl to step the ratchet around one step which rotates the drum so as to bring the next row of segments under the wipers E. This changes the heating circuit so that the coil 5 is connected directly across the line while coils 6 and 7 are connected in series. The circuit through 5 may be traced from line wire 145, wiper e^3, d^7, d^{10}, e^6, 152, 5, 153, e^5, d^9, d^8, e^4 and back over line wire 146. The circuit through 6 and 7 may be traced from line wire 145, e^3, d^7, d^{13}, e^9, 149, 6, 148, e^{10}, d^{14}, d^{12}, e^8, 150, 7, 151, e^7, d^{11}, d^8, e^4 and back over line wire 146. Assuming that the heating elements are of equal resistances, element 5 will be supplied with its maximum of current while 6 and 7 will be supplied with one-half that amount which is four and one-half times as much as they were all supplied with in the first arrangement of circuits. This of course brings about an increase in temperature. This second circuit is maintained until the arm M^2 engages the next contact c^2 which again energizes the magnet M' over the same circuit as before described, except that it now passes by way of contact c^2. Upon the deënergization of M' the drum is moved so as to bring the next succeeding row of segments d^{15}, d^{16}, etc. under the wipers E which connect each of the heating elements 5, 6 and 7 respectively directly across the line. The circuit of 5 may be traced from line wire 145, e^3, d^{15}, d^{17}, e^5, 153, 5, 152, e^6, d^{18}, d^{16}, e^4 and back over line wire 146: the circuit of 6, from line wire 145, e^3, d^{15}, d^{21}, e^9, 149, 6, 148, e^{10}, d^{22}, d^{16}, e^4 and back over line wire 146; the circuit of 7, from line wire 145, e^3, d^{15}, d^{19}, e^7, 151, 7, 150, e^8, d^{20}, d^{16}, e^4 and back over line wire 146. The current in all three heating elements is now at its maximum and the heat consequently increased. This arrangement of circuits is maintained until the arm M^2 passes over contact c^3, whereupon M' is again energized and deënergized which rotates the drum so that the row of wipers E will rest in the space intermediate the two groups of segments D' and D^2 which opens all the circuits and leaves the hand M pointing to one of the "Off" marks on the dial C'. The three rows of segments in group D^2 are each connected in the same way as those of group D' with the exception that the two outer rows are transposed, so that when the hand M is set at the mark on the dial opposite the legend "Decreasing heat", a cycle of circuit changes will take place similar to that before described, but in reverse order. The time interval between the circuit changes will be varied by withdrawing certain of the plugs p', p^2, etc., or by varying the speed of arm M^2 or both.

Fig. 10 shows a modified construction of my invention especially adapted for baking or for purposes where it is required to heat from above as well as below. In this arrangement of parts, massive heating ele-

ments 64 and 65 are disposed, one above and one below the cooking vessel 4ª within the heating chamber 3ª. These heating elements are interchangeable and exactly alike as regards their mechanical structure so that a number of such elements of different heating capacities may be used which will allow of various heat controls, such, for instance, as a difference in temperature between the top and bottom of the cooking vessel or a slowly or a rapidly increasing temperature, according to the size and composition of the heating coils used. Circuit connections are made with the heating elements by means of plug contacts 66, 66′, which project through bushings 160, 160′ respectively, so as to engage with the stationary spring contacts 67 and 67′, the stationary contacts being nested in porcelain blocks 69 to the bottom and top of the heating chamber. Hand-holds 68 are provided in the top and bottom of the heating elements for adjusting the same within the chamber 3ª. The contacts 67, 67′, are mounted within the porcelain blocks 69 and set sufficiently within the plane of the opening to avoid short circuiting by the cooking vessel or the metallic surface of the heating elements. The upper contacts 67, 67′, are identical with the lower except that they are turned at right angles with the axis of the lower hinge in order to allow sufficient margin for the movement. Permanent circuit connections are made between the contacts 67, 67′ and terminals of socket 70 through leads 71, 73, 72, and 74. Heat regulation is accomplished by means of a thermostatic switch 75 consisting of a thermal spring 76 incased in a metal bulb 77 which extends into a recess 78 in the side of the heating chamber 3ª, said spring being operatively connected to a shaft 79 whose movement is amplified and transmitted through gears 80—81 and shaft 82 to the indicating hand 83 adapted to sweep over a graduated dial 84, Figs. 10 and 13. 85 and 86 are adjustable hands, insulated from each other and from the hand 83 and carrying contact studs 87 and 88 which project into the path of said indicating hand. Circuit connections are made between the hands 83, 85 and 86 to the binding posts 89, 90 and 100 respectively, through the shaft 82, insulated collars 101, 102 and conductors 103, 104 and 105 respectively. The dial and hands are protected by a cover 106, which fits over a projecting rim 107 on the face of the dial. Circuit connections are made with the apparatus as shown in Fig. 10 through the binding posts 89, 90 and 100 and attachment 108.

Fig. 12 is a diagram of the heating and control circuits used with the apparatus shown in Fig. 11. This circuit contains additional apparatus in the form of relays R, R′, R² and a plug and split socket P, P′, which may be mounted within a separate cabinet or at some convenient place upon the "cooker" cabinet. The relay R controls the circuit of the heating elements 64 and 65, through a switch S consisting of a bridging blade *s* secured to the end of the armature lever *r*, but insulated therefrom, and adapted upon the actuation of the relay to bridge the contacts s'—s^2 and complete a circuit through the heating elements in multiple. R′ and R² are interlocking relays and conjointly control relay R, *i. e.* they are self-locking relays each having its locking circuit controlled through a back or normally closed contact on the other relay while the contacts r^{13}—r^{14} and r^{21}—r^{22} of relays R′ and R², respectively, are included in the circuit of relay R. Relay R has an initial energizing circuit independent of the relays R′ and R² and controlled through the split socket P′ and thermostat 75. The heavy lines 109 and 110 are line wires leading from a source of current.

The operation of the modification shown in Figs. 10, 11, 12, and 13 is as follows: A pair of heating elements 64—65 (Figs. 10 and 11) are selected according to their heating capacity and the nature of the substance to be cooked, and the heating element 64 lowered by means of one of its handles 68, into the bottom of the heating chamber 3ª and there turned until the contacts 66—66′ fall into engagement with the spring contacts 67—67′. The vessel 4ª, provided with a lid 15ª and containing the substance to be cooked, is then placed within the heating chamber so as to rest upon the heating element 64 and the second heating element 65 lowered into the heating chamber so as to rest upon the lid of the cooking vessel in position to make electrical connection with the upper contacts 67—67′. The cabinet cover 2ª is closed down bringing with it the muffler 13ª which fills the remaining space in the upper part of the heating chamber, completing the insulation thereof and establishing electrical connections with the upper heating element. The next step is to set the hands 85 and 86 of the thermostat 75 (Figs. 12 and 13) to the minimum and maximum temperature limits respectively, the indicating hand 83 being normally in the position indicating predetermined minimum temperature held by the contact stud 87 on arm 85, which establishes the circuit connections shown in Fig. 12 and prepares the apparatus to begin heating upon the insertion of the plug P into socket P′. Upon the insertion of plug P, relays R and R′ are energized, the former by current from line wire 109, through 111, P—P′, 112, 83, 87, 113, 114, R, 115 and back over line wire 110; the latter (R′) by current from line wire 109, through 111, P—P′, 112, 83, 87, 113, 116, R′, 117, 115 and back over line wire 110. The actua-

tion of relay R closes switch S and completes a circuit through heating elements 64 and 65 as follows: line wire 109, 73 bus bar 71, 64, and 65 in multiple, bus bar 74, 72, 118 and back over line wire 110. Relay R′, on being actuated, completes a locking circuit for itself and relay R from line wire 109 through 119, r^{21} r^{22}, 120, r^{14} to r^{13}, where it divides; one branch passing by way of conductors 113 and 116 through R′ 117, 115 and back over line wire 110; the other branch passing by way of conductor 114 through R to 115 and back over line wire 110. As the double locking or holding circuit just described does not include the contact 87 and arm 83 of thermostat 75, it is not affected when the minimum temperature is exceeded and the indicator arm moves away from the contact 87. The relays R and R′, therefore, remain energized and the increase in temperature continues until the maximum temperature, as determined by the position of contact 88, is reached, whereupon the arm 83 engages said contact and the following circuit changes takes place. Relay R^2 is energized by current from line wire 109 through 111, P—P′, 112, 83, 88, 121, R^2, 122, 115, and back over line wire 110. This actuation of relay R^2 opens contacts r^{21}—r^{22} and closes contacts r^{23}—r^{24}. The opening of contacts r^{21}—r^{22} breaks the holding or locking circuit of relays R and R′ while the closure of contacts r^{23}—r^{24} completes a locking circuit for relay R^2 which may be traced as follows: line wire 109, 123, contacts r^{12}—r^{11} (R′ now being deënergized), 124, contacts r^{24}—r^{23}, 125, 121, R^2, 122, 115 and back over line wire 110. The deënergization of relay R opens the circuit through heating elements 64 and 65 at switch S and thus prevents the temperature from rising above the predetermined maximum. When the temperature falls below the maximum and so long as it remains within the limits set, the circuit conditions remain unchanged as the locking circuit of R^2 is independent of the thermostat contact 88 and is not affected by the disengagement of arm 83 therefrom. However, when the minimum temperature is reached the arm 83 again engages contact 87 and relays R and R′ are energized in the same manner, as before described. The energization of R′ opens the locking circuit of R^2 at contacts r^{11}—r^{12}, and R^2 becoming deenergized closes its contacts r^{22}—r^{23} which establishes the locking circuit of R and R′ as before described. Thus the temperature of the heating chamber is kept within predetermined limits which may be varied according to the character of the substance to be cooked. For example, in roasting meat, where a browning heat is required at the start and then a lower temperature that will cook without burning, the minimum contact 87 is set at zero and the maximum contact 88 at the browning temperature so that upon reaching the browning temperature the heat supply is cut off which permits a slight drop in temperature, due to absorption of heat by the meat, sufficient to stop the browning, the temperature eventually becoming equalized throughout the whole mass within the heating chamber and conserved long enough by the packing to complete the cooking. For this same purpose the controller of Fig. 8 may be used with the cooker of Fig. 10.

Fig. 14 shows a simplified circuit to be used with Fig. 10, including a relay R^4, thermostat T^4 and plug and socket switch P^4 connected in series across the line, the switch S^4 being included in the multiple circuit of the heating elements 64—65. Upon the closure of the plug switch P^4, the relay R^4 is energized in the following circuit: line wire 156, 158, R^4, 159, T^4, 160, P^4, 161 and back over line wire 157. The actuation of R^4 closes the switch S^4 which completes a circuit through the heating elements from line wire 156, 162, S^4, 163, bus bar 70, heating elements 64 and 65 in multiple, bus bar 71, 164 and back over the line wire 157. As the temperature increases the thermal spring t^2 is warped over in the direction of the arrow until it disengages the segment t^3 whereupon the circuit of the relay is opened and said relay becoming deënergized opens the circuit of the heating elements, which condition is maintained until the fall in temperature is sufficient to permit the spring t^2 to retract and again engage the segment t^3 and restore the heating circuit. The temperature is thus kept constant so long as the plug switch P^4 is closed.

Referring to Fig. 15 I have shown here a scheme for automatically cutting off the current and cooling the contents of the cooking vessel. The cooker here shown is identical with that of Fig. 1 with the exception that an electromagnetic lock K is substituted for the hasp and staple and other apparatus added. A coil spring CS is fitted to the hinged end of the cover 2 and tends to open the same upon the release of the electromagnetic lock. A chain F is attached to the cover and to the body of the cabinet through a spring G which limits the backward throw of the cover and acts to damp its momentum when swung back. The electromagnetic lock K comprises a magnet K^1 having a detent K^2, at the end of its armature lever, adapted to retain the bolt K^3 and release the same upon the energization of the magnet. The whole is housed in a casing K^4. A thermostat T^5, similar to that shown in Fig. 10 is provided having its indicating arm t^4 and adjustable arm t^6 connected with the binding posts t^7 and t^8 respectively in the same manner as that described in connection with

Fig. 10 and as indicated diagrammatically by dotted lines in Fig. 15. The time switch S^5 consists of a clock having an hour hand H′ and an adjustable hand H^2 carrying a contact h^2 which projects into the path of said hour hand, the hands being insulated from each other and from the clock mechanism. A switch S^6 is provided for connecting the magnet K^1 to either one or both of the controlling devices T^5 or S^5 and has the common contact connected in series with the contacts of a switch S^7 controlled by the position of the cover 2.

When it is desired to have the cooker automatically opened at a predetermined maximum temperature regardless of time, the arm t^6 is adjusted to indicate the maximum temperature and the arm m' of switch S^6 thrown over into engagement with contact s^6. When the maximum temperature is reached the arm t^4 of the thermostat engages the contact on arm t^6, which completes the circuit of magnet K′ as follows: line wire 165, K′, 170, S^7, 166 s^6, m', t^8, t^6, t^4, t^7, 167, h^4 and back over line wire 168. Upon the energization of K′ the detent K^2 is thrown out of engagement with the bolt K^3 and the cover 2 is swung back by the action of spring CS and held in its open position by the chain F which permits the access of air to the top of the cooking vessel.

When it is desired to cool at a set time, regardless of heat conditions, the cover 2 is closed down and held by the bolt and detent, the arm m' swung out of engagement with contact s^6 and arm m^2 connected instead, and, the adjustable hand H^2 of the time switch S^5 is set at the desired time. The lid now remains latched until the hour hand H′ engages the contact h^2 on hand H^2 whereupon the magnet K′ is energized by current over the following path: line wire 165, K′, 170, S^7, 166, s^6, m^2, 169, h^3, H^2, h^2, H′, h^4 and back over line wire 168. The actuation of K′ causes the release of the cover in the manner before described so as to permit the cooling of the cooking vessel.

When it is desired to cool at either a set time or a certain maximum temperature, whichever occurs first, both arms m' and m^2 are swung into engagement with the contact s^6 and the thermostat and time switch set at the desired limits. When either one of the predetermined limits is reached the magnet K′ is energized over one of the circuits above described according to whichever controlling device, T^5 or S^5, makes contact first.

Referring to Fig. 16, the several elemental parts of the system are here shown in their proper positional and connectional relation to each other. It will be seen that the time switches M^2, C, S and S^5 are controlled by a common chronometer and that the several heat controlling means such as the drum commutating device D and the thermostat controlled switches R, 16, and relays R^1 and R^2 operate without interference with each other.

Having thus described my invention, what I claim is:

1. A heating system for an electrical cooker with a heat insulated chamber, comprising an electrical heating element adapted when energized to raise the temperature in said chamber by progressive increments, a source of current supply for said heating element, circuit connections extending from the element outside the chamber to said source, switch contacts included in and controlling the continuity of said circuit connections, an electromagnet controlling said contacts and thereby governing the supply of power to said heating element, an energizing circuit for said electromagnet, a thermostat exposed to variations in temperature produced by the heating element and having contacts included in said magnet energizing circuit, whereby the magnet will be energized or deënergized as the thermostat responds to variations in temperature in the chamber, and a time controller having contacts and manually adjustable but chronometrically driven actuating devices for said contacts adapted to close the circuit of the thermostat contacts to give them control of the switch magnet.

2. A heating system for an electrical cooker having a heat insulated cooking chamber, comprising electrical heating elements, a thermostat responsive to rise of temperature in the said cooking chamber and adapted to effect the closure of the circuit of said heating elements when the temperature falls below a determinate point, and the opening of said circuit when the temperature rises above a higher determinate point, together with a time keeping chronometer having manually adjustable means for switching said thermostat device into and out of circuit at predetermined times and for predetermined periods.

3. A heating system for an electrical cooker having a heat insulated cooking chamber, comprising electrical heating elements, two switches in series jointly governing the energization of said electrical heating elements, one of said switches being operable by a thermostat in and responsive to change in temperature of the cooking chamber and the other of said switches being outside and actuated by a time keeping chronometer to enable and disable said thermostat contacts at predetermined times of day.

4. A heating system for an electrical cooker having a heat insulated cooking chamber, comprising electrical heating elements, and three circuit controlling devices, the first a switch controlling the energizing

circuit of said electrical heating elements, the second a thermostat responsive to changes in temperature within the cooking chamber controlling said switch, and the third a chronometer having contacts and adjustable actuating means controlling the circuit of the thermostat contacts.

5. An electrical cooker comprising a heat insulated chamber having a removable cover, means adapted to move said cover to open position, an electromagnetically controlled latch normally holding said cover closed, a heating system for the chamber comprising electrical heating elements and means for governing the supply of energy thereto, and a chronometer governing the circuits of said electromagnetic latch and of the heating elements and determining the time of cutting off heat and the time of opening of said chamber, respectively.

6. An electrical cooker comprising a heat insulated chamber having a removable cover, means adapted to move said cover to open position, a heating system for said chamber including electrical heating elements and means for governing the supply of energy thereto, an electromagnetically actuated latch normally holding the cover of said chamber closed, and a thermostatic device governing the circuit of said electromagnetic latch and determining the time of its release and thereby the time of opening of said chamber.

7. A heating system for an electrical cooker comprising a heat insulated chamber and associated electrical heating elements, said system comprising a current supply circuit for said heating elements, a pair of interlocking relays jointly controlling the supply of energy to said circuit, each relay having contacts controlling the energizing circuit of the other relay and a thermostatic device responsive to changes of temperature in said cooking chamber governing said relays and adapted to energize the same alternately, as the temperature rises and falls.

8. A heating system for an electrical cooker having a heat insulated chamber and associated electrical heating element, said system comprising a pair of relays jointly controlling the circuit of said element, the one adapted to close said circuit and the other to open the same, a locking circuit for each relay controlled through contacts on the other, and a thermostatic device responsive to change in the temperature of the cooking chamber adapted to energize said relays alternately on the rise and fall of temperature respectively.

9. A heating system for an electrical cooker having a heat insulated chamber and heating elements therefor, said system consisting of a circuit for the said heating elements, circuit changing means adapted to increase progressively the supply of energy to said circuit, similar means adapted to decrease progressively the supply of energy to said circuits, and a chronometric device common to both of said circuit changing means, together with a manual shifting device for said circuit changing means operable independently of the chronometric device to shift the circuit changers and place one or the other of the same in position to be operated by the chronometer.

10. A heating system for electrical cookers comprising a plurality of electrical heating elements associated with a single heating chamber together with a single switching means for controlling the current supply to the said heating elements, means controlling said switching means responsive to variation in temperature of the heating chamber and other means controlling said switching means responsive to predetermined time measurements of a chronometer.

11. In an electrical cooker, a heating system therefor comprising a plurality of electrical heating elements associated with a single heating chamber, chronometrically controlled means for progressively varying the circuit connections of said heating elements in a predetermined manner together with a thermostat responsive to temperature changes in the heating chamber to energize and deënergize said heating elements collectively.

12. An electrical cooker comprising a heat insulated chamber having a removable cover, means adapted to move said cover to open position, a heating system therefor comprising electrical heating elements and means for governing the supply of energy thereto, an electromagnetically actuated latch normally holding the cover of said chamber closed, a chronometer governing the circuit of said electromagnetic latch and determining the time of its release and thereby the time of opening of said chamber, and a cooling system for said heat insulated chamber normally inoperative and operable only upon the removal of the cover.

13. In an electrical cooker comprising a heat insulated chamber having a removable cover and electrical heating system associated therewith, an electrical switch adapted upon removal of the cover to open the circuit of said heating system together with a cooling system for said heating chamber normally inoperative and operable only upon removal of the cover.

14. A heating system for electrical cookers comprising a heat insulated chamber and electrical heating elements associated therewith, an intermittently actuated thermostat adapted to cut said heating elements in and out of circuit collectively in response to temperature changes within the heat insulated chamber for maintaining a substantially constant temperature therein, and means for

predetermining the time period of connection of said thermostat with a source of current.

15. A cooking apparatus comprising a heat insulating chamber, an electrical heating element therein, connections from said heating element to supply power thereto from without the chamber, a switch controlled by a chronometer which keeps the time of day for effecting the initial closure of said circuit to supply energy to said heating element, and a thermostatically controlled means simultaneously cut in by the chronometer switch and thereafter responsive to a predetermined rise of temperature in said heating chamber to effect final opening of said circuit and cutting off of the said supply of energy.

16. A cooking apparatus comprising a heat insulating chamber, an electrical heating element therein, connections from said heating element to supply power thereto from without the chamber, a switch controlled by a chronometer which keeps the time of day for effecting the initial closure of said circuit to supply energy to said heating element, and a thermostatically controlled means simultaneously cut in by the chronometer switch and thereafter responsive to a predetermined rise of temperature in said chamber to effect final opening of said circuit and cutting off of the said supply of energy, and additional thermostatically controlled means to initiate convection in said chamber, likewise responsive to rise of temperature in said chamber.

17. A cooking apparatus comprising a heat insulating chamber, an electrical heating element therein, connections from said heating element to supply power thereto from without the chamber, a switch controlled by a chronometer which keeps the time of day for effecting the initial closure of said circuit to supply energy to said heating element, and a thermostatically controlled means simultaneously cut in by the chronometer switch and thereafter responsive to a predetermined rise of temperature in said heating chamber to effect final opening of said circuit and cutting off of the said supply of energy by said chronometer, and a chronometrically controlled convection initiating device adapted to initiate convection in said chamber a predetermined time from the operation of said circuit opening means.

18. A cooking apparatus comprising a heat insulating chamber, an electrical heating element therein, circuit connections for supplying energy thereto from without the chamber, a switch in said circuit controlled by a thermostat subject to the heat in said chamber and operating upon predetermined rise of temperature in said chamber to effect opening of said switch, said switch having a bias to open position, and chronometrically actuated convection controlling means connected with said chamber whereby convection may be automatically initiated in predetermined time relation to the opening of said circuit by said thermostat.

19. A cooking apparatus comprising a heat insulating chamber, an electrical heating element therein, circuit connections to supply energy thereto from without the chamber, a thermostatically controlled switch in said circuit having a bias to open position and operated upon predetermined rise of temperature in said chamber to open and maintain open said circuit, and thermostatically actuated convection controlling means responsive likewise to a predetermined rise of temperature in said chamber to initiate convection therein.

20. A cooking apparatus comprising a heat insulating chamber, a plurality of electrical heating elements therein, circuit connections therefor including switching means for varying the supply of energy thereto, a chronometer keeping the time of day, means whereby said chronometer actuates said switching means, and a thermostatically actuated switch in said circuit cut in by the chronometer, and thereafter subject to the temperature within said chamber, normally retaining said circuit closed, and operative upon predetermined rise of temperature in said chamber only to open said circuit.

21. A cooking apparatus comprising a heat insulating chamber, an electrical heating means therein, a chronometer keeping the time of day, switching means in said circuit actuated by said chronometer to progressively vary the supply of energy to said heating means, chronometrically actuated means controlling the final opening of said circuit at a predetermined time of day, and chronometrically controlled convection controlling means adapted to automatically initiate convection, whereby convection may be initiated in predetermined time relation to the progressive variation of heat produced in said chamber.

In testimony whereof I affix my signature in presence of two witnesses.

EDWARD E. CLEMENT.

Witnesses:
JAMES H. MARR,
HARRY F. RUETH.