United States Patent [19]

Peters

[11] **3,812,861**

[45] **May 28, 1974**

[54] **DISPOSABLE ELECTRODE**

[76] Inventor: **Ronald L. Peters,** 927 W. MacArthur Blvd., Oakland, Calif. 94608

[22] Filed: **Nov. 15, 1972**

[21] Appl. No.: **306,614**

[52] **U.S. Cl.** ..... **128/418,** 128/416, 174/5 SB, 317/2 B

[51] **Int. Cl.** **A61n 3/06**

[58] **Field of Search** ..... 128/418, 416, 410-411, 128/404, 384, 379, DIG. 4, 2.06 E, 2.1 E, 303.13, 362; 174/5 SB, 74 R, 117 FF; 317/2 B

[56] **References Cited**

UNITED STATES PATENTS

879,777	2/1908	Lackland	128/416
1,657,149	1/1928	Catlin	128/418
1,662,446	3/1928	Wappler	128/418
1,975,518	10/1934	Rose	128/416
3,633,189	1/1972	Billawala	174/117 FF
3,662,757	5/1972	Blackett	128/416
3,642,008	2/1972	Bolduc	128/416

FOREIGN PATENTS OR APPLICATIONS

732,130	9/1932	France	128/416

Primary Examiner—Richard A. Gaudet
Assistant Examiner—Lee S. Cohen
Attorney, Agent, or Firm—Harris Zimmerman

[57] **ABSTRACT**

A disposable electrical plate for creating electrical contact with a human body comprises a flexible sheet of paper board, cardboard, or the like coated on both sides with a conductive foil film. One edge of the plate is formed into tabs which alternately wrap over and under a metal bar in a woven fashion to electrically connect the two foil film surfaces. To the opposing edge of the plate a clip with a notch, hook, or the like is secured. An electrical conductor secured to the metal bar completes a circuit to the plate. The plate may be wrapped around a limb of a subject to make electrical contact and then secured by positioning the conductor in the notch or hook, preventing the plate from unwrapping and breaking contact.

3 Claims, 5 Drawing Figures

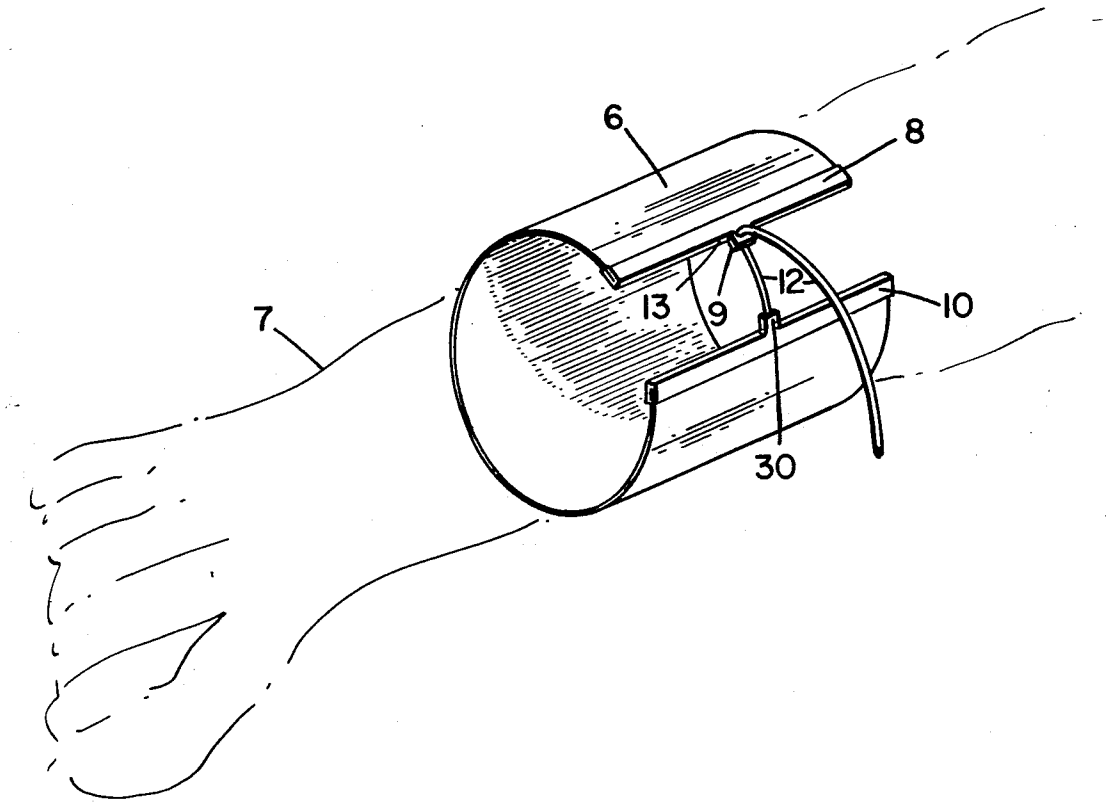

FIG_1

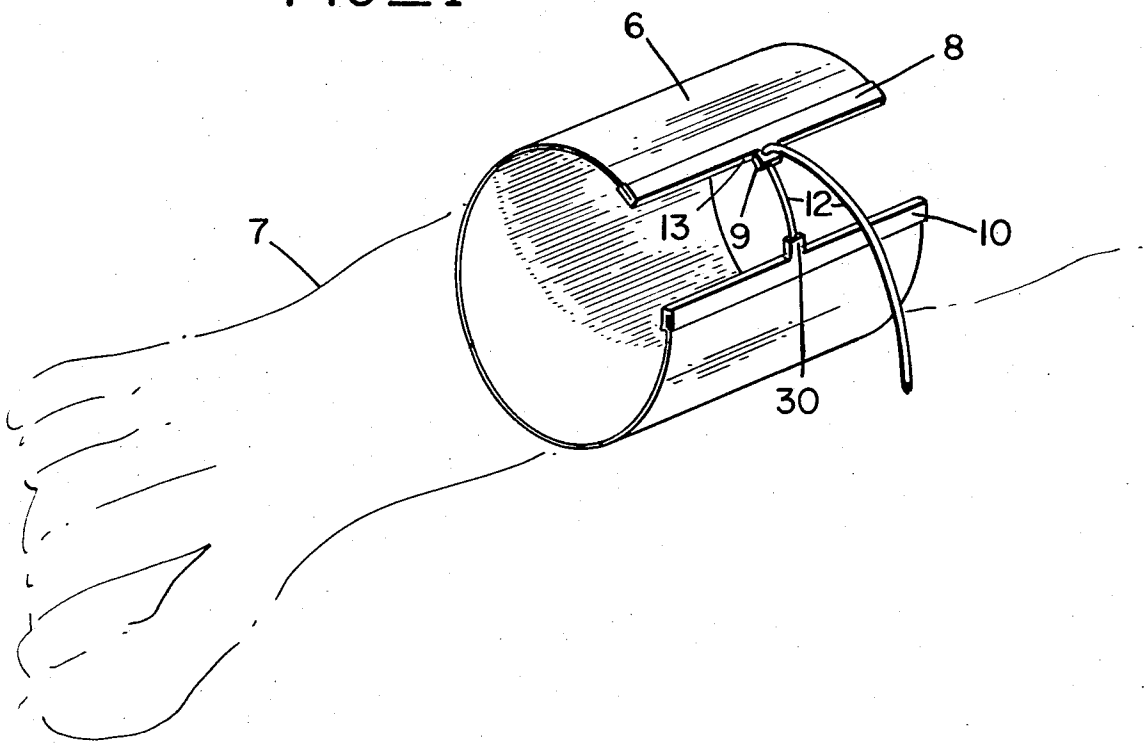

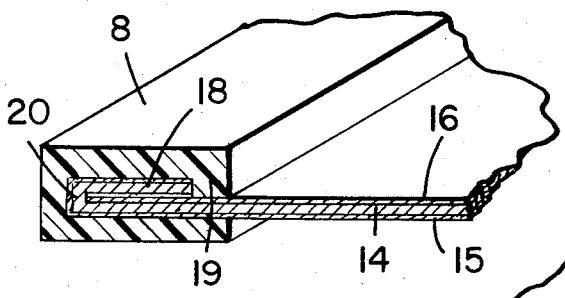

FIG_2

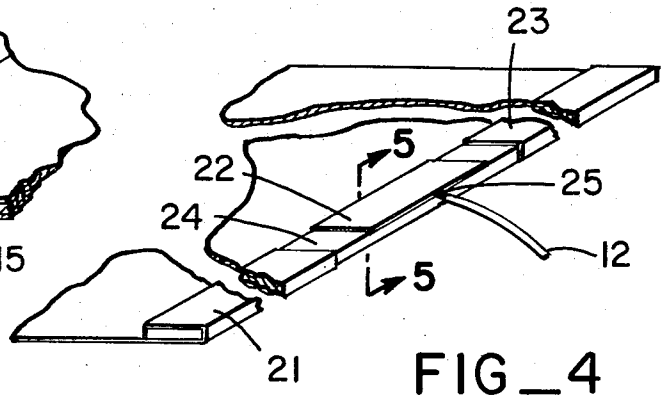

FIG_4

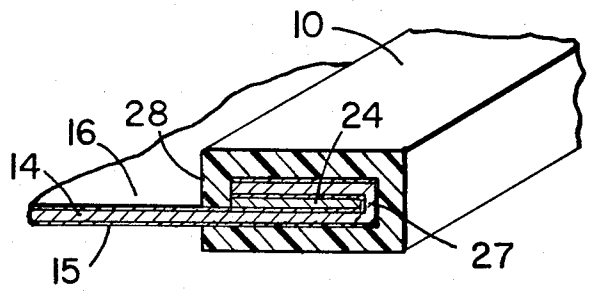

FIG_3

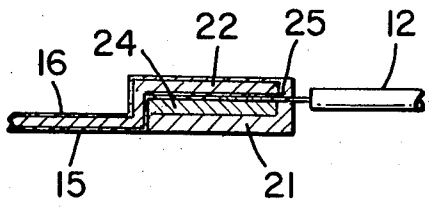

FIG_5

DISPOSABLE ELECTRODE

BACKGROUND OF THE INVENTION

In present electrosurgical techniques such as cautery, fulguration, and electrocoagulation, a metal plate must be used to ground the patient. These plates, formed of stainless steel, lead, or aluminum must be placed in engagement with a large skin area of the patient to ensure proper contact and to avoid burning of the patient. Prior art devices using rigid metal plates placed under the patient may break contact if the patient is moved, and must be vigorously cleaned before re-use. Other prior art devices using a conductive coating on one side of an insulating, flexible base may be misapplied with the insulator contacting the patient, creating no electrical circuit whatsoever. Similar devices which rely on adhesives or pastes to secure the plate to the patient may leave an unpleasant residue on the patient and make cleaning and sterilizing more difficult.

SUMMARY OF THE INVENTION

The present invention provides a contact plate which is readily secured to a patient without risking misapplication, and is sufficiently inexpensive to manufacture that it may be discarded after use. The plate is formed of a rectangular section of flexible paper board or cardboard which is coated on both sides with a conductive foil film. A clip of plastic or the like with a notch integrally formed therein is secured to one end of the rectangular plate. The other end of the plate is formed into short tabs which wrap over and under a metal bar in woven fashion to electrically join both conductive foil surfaces. A clip secured over the tabs maintains their contact with the bar and also secures an insulated cable to the bar. The device may be wrapped around a limb of a patient with either foil surface creating a good contact. The plate is secured by positioning the cable through the notch where it is captured, preventing the plate from unwrapping and breaking contact. Because the plate is actively secured to the patient, a shift in the patients' position or weight will not break contact. And, due to the simplicity of design of the plate in using the conducting cable as part of the clasp, the device is sufficiently inexpensive to permit disposal after use.

THE DRAWING

FIG. **1** is a perspective view of an application of the present invention;

FIG. **2** is a detailed cutaway side view of the present invention;

FIG. **3** is a detailed cutaway side view of the present invention;

FIG. **4** is a perspective end view of the present invention;

FIG. **5** is a side cutaway view taken along line **5—5** of FIG. **4.**

DESCRIPTION OF THE PREFERRED EMBODIMENT

The present invention is drawn to a disposable electrical contact plate used for creating electrical contact with a human body. As shown in FIG. **1**, it consists of a flexible plate **6** which is wrapped around the limb **7** of a patient. The plate is of a generally rectangular shape, with one end terminating in a clasp clip **8** in which a clasp **9** is integrally formed. The clasp clip may be formed of plastic or any similar material. The other

end of the rectangular plate terminates in a conductor clip **10,** with an insulated conductor cable **12** extending from the clip **10** to an electrical circuit (not shown). The diameter of the conductor cable is similar in dimension to the slot opening **13** in the clasp, and the cable, when inserted into the slot opening, is securely yet releasably retained by the clasp. This retaining action maintains the plate securely about the limb of the patient, ensuring that electrical contact will not be broken. And, due to the fact that any portion of the cable may be retained by the clasp, the device is adaptable to small and large limbs. Thus the present invention may be used on both arms and legs, and may be both comfortably and securely applied to many patients of widely varying physiognomy.

The plate **6** consists of a flexible base material **14** such as paper board or cardboard, to which conductive foil film layers **15** and **16** are applied on both sides. A portion **18** of the plate is folded over on itself and the clasp clip **8** is secured over the folded portion. The clasp clip, of generally rectangular cross sectional configuration with a cavity **20** within, has a re-entrant flange member **19** which permanently secures the folded portion within the cavity and prevents the plate from detaching from the clasp clip. Other methods of securing the clip to the plate, such as bonding the clip directly to the unfolded plate end, may also be used.

The conductor clip end of the plate is formed by die cutting or similar means, into tabs **21, 22,** and **23.** Tabs **21** and **23** pass under metal bar **24** and are wrapped around it, allowing foil film **16** to contact the bar. Tab **22** passes the end of the plate, allowing foil film **15** to contact the bar. Because both conductive foil surfaces are in contact with the metal bar, an electrical connection between the two foil surfaces is created. Insulated conductor cable **12** has a stripped end **25,** the exposed conductor being soldered or similarly secured to the bar. A circuit path may exist from the cable conductor through the metal bar to either conductive foil film, and thence to the patient. Thus the present invention may be applied to a patient with either surface of the plate contacting the skin, thereby avoiding the possibility of an open circuit due to misapplication of the contact plate to the patient.

As shown in FIG. **3,** the conductor end of the plate is secured to the metal bai by means of the conductor clip **10.** The clip **10** has a generally U-shaped cross section with a cavity **27** therein, in which the metal bar with the tabs wrapped thereon is received. Re-entrant flange **28** extending into the cavity **27** prevents the tabular end of the plate from detaching from the bar or from the conductor clip.

Integrally formed in the conductor clip is a cable support **30,** shown in FIG. **1,** to receive and support the insulated cable where it enters the conductor clip. The cable support relieves the tensile stress and shear stress on the cable end and on the solder joint due to normal use, providing increased strength and reliability for the invention.

As shown in FIG. **5,** the conductor portion **25** of the insulated cable **12** extends over the top surface of the bar **24,** and is soldered thereto to provide good electrical contact. The tab **21** passes under and around the bar and the tab **22** passes over the bar, permitting conductive surfaces **16** and **15** to make contact with the bar.

Thus the present invention provides a device for contacting a human body which, because both sides are conducting surfaces, cannot be misapplied when used. And, because the present invention wraps around a limb of a body and is secured thereto, contact cannot be broken merely by a shift in the weight or position of the body. Furthermore, the use of the insulated cable as part of the clasp means permits the maximum effectiveness with a minimum of parts and production costs, allowing the present invention to be easily used and then discarded.

I claim:

1. A disposable electrode for contacting a human body comprising conductive flexible plate means for contacting the skin of a human body, said plate means including a sheet of base material, said sheet being coated on both top and bottom surfaces with an electrically conductive film, one edge of said sheet being formed into adjacent tabs, conductor means secured to said conductive plate means with said tabs to connect said conductive plate means to an electrical circuit, and clasp means secured to said conductive plate to secure said plate to said human body, said conductor means including a conductive bar extending along said one edge of said sheet and connected to said tabs to contact said top and bottom conductive film.

2. The disposable electrode of claim 1, wherein at least one of said tabs is wrapped clockwise about said conductive bar and secured thereto, said bottom conductive film thereby contacting said conductive bar; and wherein at least one of said tabs is wrapped counterclockwise about said conductive bar and secured thereto, said top surface conductive film thereby contacting said conductive bar.

3. The disposable electrode of claim 2, wherein said conductor means is connected to said conductive bar to contact said top surface conductive film and said bottom surface conductive film therethrough.

* * * * *