Nov. 30, 1926. 1,608,645

W. M. BRUCE, JR

ACOUSTIC ATTACHMENT FOR LOUD SPEAKERS

Filed April 11, 1925

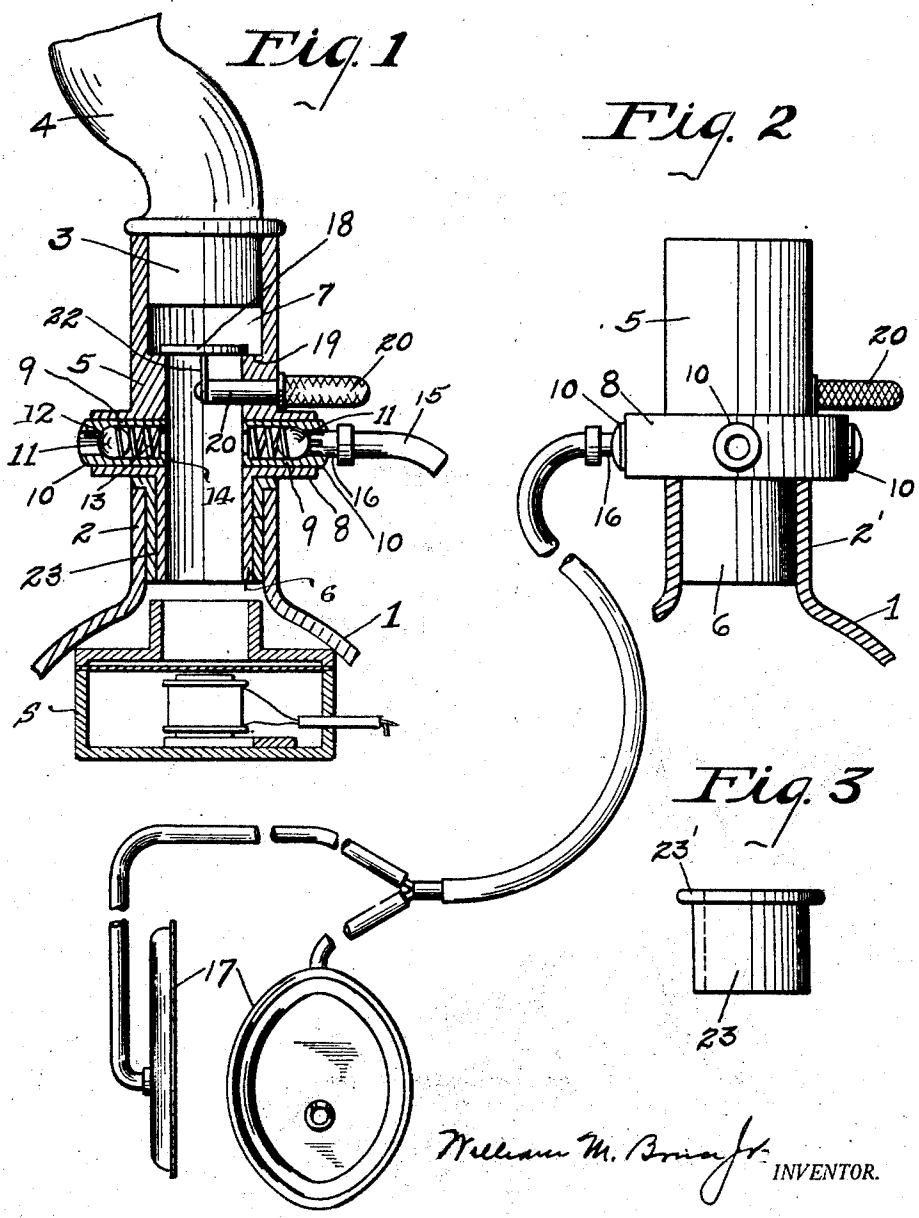

William M. Bruce Jr. INVENTOR.

BY

Stanley Ex Bowman ATTORNEYS

Patented Nov. 30, 1926. 1,608,645

UNITED STATES PATENT OFFICE.

WILLIAM M. BRUCE, JR., OF SPRINGFIELD, OHIO.

ACOUSTIC ATTACHMENT FOR LOUD SPEAKERS.

Application filed April 11, 1925. Serial No. 22,452.

This invention relates to improvements in radio receivers, it particularly relating to a receiving device which has provision for the attachment of a loud speaker in the form of a horn and also for the attachment of one or more receiving head pieces, the improvements being in the nature of a connector between the amplifying horn and base containing the sound producing unit which can be applied to any of the receiving devices now in commercial use.

The object of my invention is to provide an attachment in the form of a connector between the receiving unit and horn or amplifier which will be simple in its construction, effective in operation and adapted to units and amplifiers having sockets and stems of different sizes.

In the accompanying drawings:

Fig. 1 is a vertical section of my improved device showing a portion of the unit base in section and a portion of the horn or amplifier in full lines.

Fig. 2 is a side elevation of my connector partly in section.

Fig. 3 is an elevation of a bushing or adapter.

Referring to the drawings, 1 represents the outer portion of the usual base which contains the sound producing units and 2 represents the usual socket with which the base is provided and which heretofore has received the stem 3 of the horn or amplifier 4. In addition to the amplifying horn 4 I have provided means for the attachment of one or more head pieces, such connections heretofore having been made directly with the base which necessarily contemplates a specially constructed base. In order that both forms of reception, i. e., the amplifier and head piece may be employed in connection with reception devices now on the market I have arranged the connections for the head piece in a detachable connector member arranged to form a connection between the base and the horn. This connector member is in the form of a hollow cylindrical body 5, one end of which is exteriorly reduced to form a stem 6 and the other end of which is interiorly enlarged to provide a socket 7. The body 5 is preferably provided with an exterior annular enlargement or flange 8 and extending through this flange 8 and the body 5 are a series of lateral circular passageways 9, four in number in the present case, each one of which has pressed therein with a tight fit a housing or cage 10 which confines a ball valve 11 normally pressed against a seat 12 by the spring 13; the spring being confined by the inturned flange 14 at the rear end of the cage. Flexible tubes 15, each provided with a metallic connecting piece 16 which may be slipped into the outer end of one of the valve cages and thereby press the ball valve away from its seat, furnish the means for connecting the ear piece 17 with the interior of the body 5. If desired, the amplifier or horn may be cut off by a valve 18 having a seat on the shoulder 19, this valve being operated from an exteriorly arranged finger piece 20 adapted to rotate a shaft 21 having a crank arm which is connected to the valve by a link 22.

In the present case the stem 6 is made to fit the smaller sized base sockets such as the one shown at 2′ in Fig. 2. For the larger sized sockets, such as the one shown in Fig. 1, a bushing or adapter 23 having an annular flange 23′ may be inserted in the socket 2, this bushing in turn receiving the stem 6. The socket 7 shown is designed to receive the larger sized horn stems, such as the one shown in Fig. 1, and for the smaller sized horn stems 3 a bushing similar to the bushing 23 may be inserted in the socket 7.

It has been found in practice that one bushing or adapter will make this attachment or connector available for most of the loud speakers now in use. For others, it is obvious that the stem and socket of the connector may be adapted to fit horns and bases having special constructions.

Having thus described my invention, I claim:

1. An attachment for radio receivers, in combination, with a radio receiver unit and an amplifying device, with means for detachably connecting the same together, of a chambered member open at each end adapted to be inserted between said unit and device, together with means for connecting the ends of said chambered member, respectively, with said unit and device, and means for connecting a head reception piece with the chamber of said member.

2. In an attachment for radio receivers, a unitary insertable member formed with an open-ended chamber and having means at its ends for detachably connecting the same with a radio receiver unit and with an amplifier, said attachment forming a detach-

able connection between said unit and amplifier, and means for connecting the tube of a head reception piece to said member.

3. In an attachment for radio receivers, a connector member provided with a chamber extending therethrough, one end of said connector member being provided with a stem to be received by the socket of a radio receiver unit, the other end of said connector member having a socket to receive the stem of an amplifier, and means for connecting a head reception piece with the chamber of said connector member.

4. In a radio receiver, the combination, with a radio receiver base and an amplifier having means for detachably connecting the same together, of a unitary insertable member provided with means for connecting a head reception piece thereto and also having means for detachably connecting the same to both the said base and amplifier.

5. In a radio receiver, the combination, with a radio receiver unit and an amplifier normally joined together by a stem and socket connection, of a connector having socket and stem connections at its respective ends to co-operate with the stem and socket connections on the amplifier and receiver to form an intermediate connection and chamber between said receiver unit and amplifier, and means for connecting the tube of a reception head piece to said connector.

6. In an attachment for radio receivers, a member having a chamber extending therethrough, means for connecting said member with a radio receiver unit, a plurality of means for attaching a plurality of tubes of head reception pieces with the chamber of said connector member, and an automatic valve in each of said means arranged to be opened when a tube is connected therewith.

7. In an attachment for radio receivers, a member having a chamber therethrough, a valve for closing one end of said chamber, means for connecting said member with a radio receiver unit and with an amplifier, and a plurality of means for connecting a plurality of tubes of head reception pieces with the chamber of said member together with a valve in each of said means for normally closing the same.

8. An attachment for radio receivers, in combination, with a radio receiver unit and amplifying device, one of which has a stem and the other a socket for detachably connecting the same together, said attachment comprising a chambered member open at each end and adapted to be inserted between said unit and device, one end of said chambered member having a socket and the other end a stem to cooperate with the stem and socket of said unit and device, respectively, and a removable adapter bushing adapted to be received in at least one of said sockets, for the purpose specified.

In testimony whereof, I have hereunto set my hand this 6th day of April, 1925.

WILLIAM M. BRUCE, JR