June 29, 1948. L. B. CORNWELL 2,444,336

ELECTRICAL SOUND TRANSLATING DEVICE

Filed Jan. 30, 1946 2 Sheets-Sheet 1

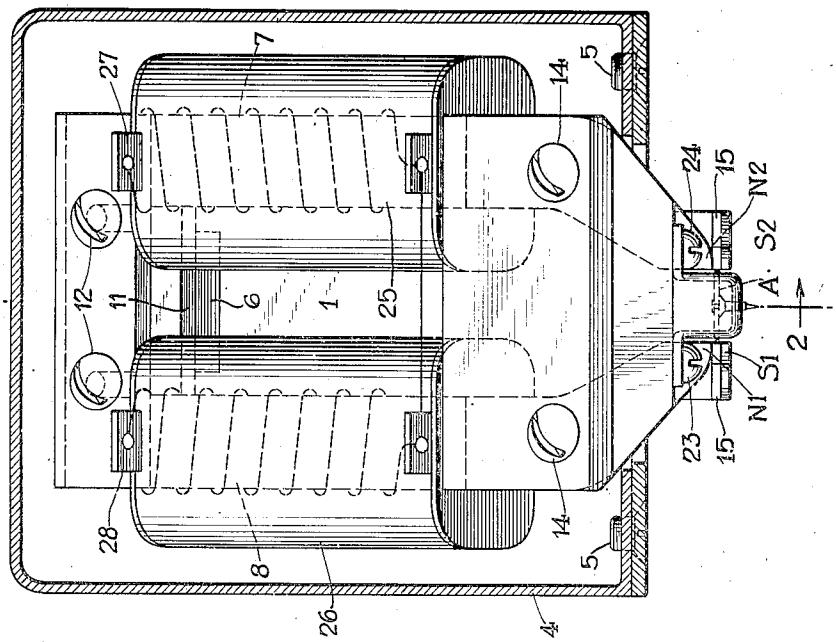

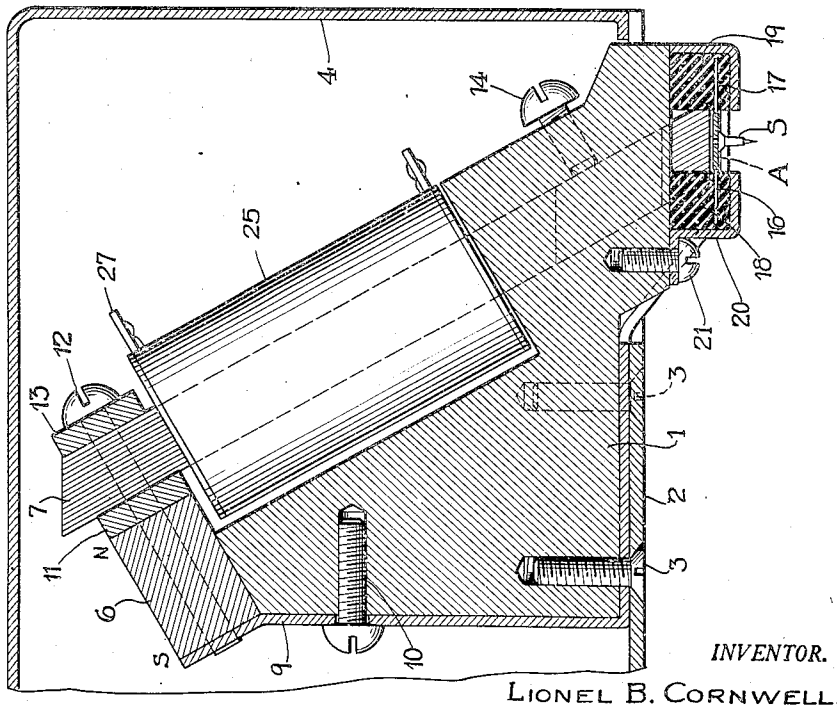

INVENTOR.
LIONEL B. CORNWELL.
BY Ward Crosby & Neal
his ATTORNEYS.

June 29, 1948. L. B. CORNWELL 2,444,336

ELECTRICAL SOUND TRANSLATING DEVICE

Filed Jan. 30, 1946 2 Sheets-Sheet 2

Fig. 7.

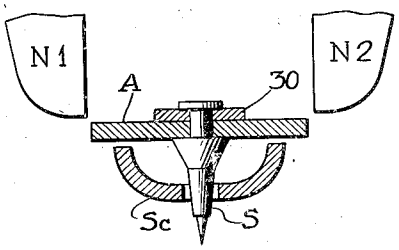

Fig. 5.

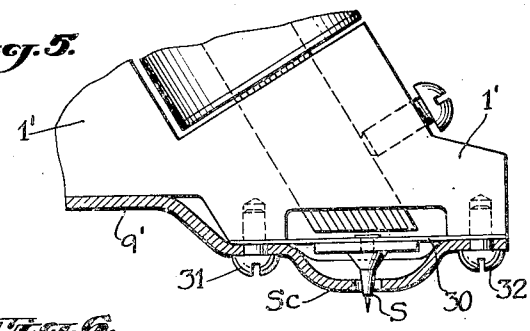

Fig. 4.

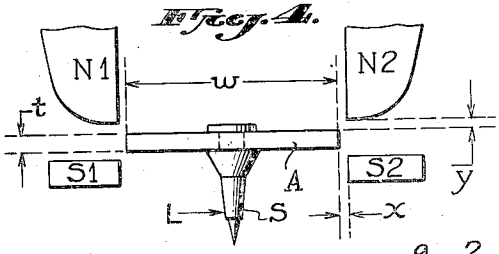

Fig. 6.

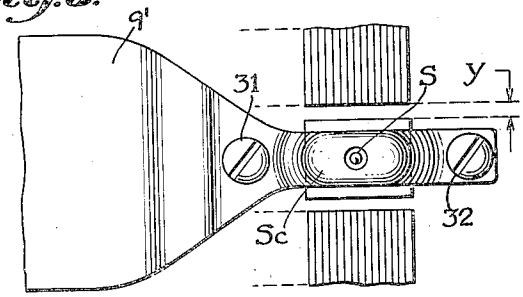

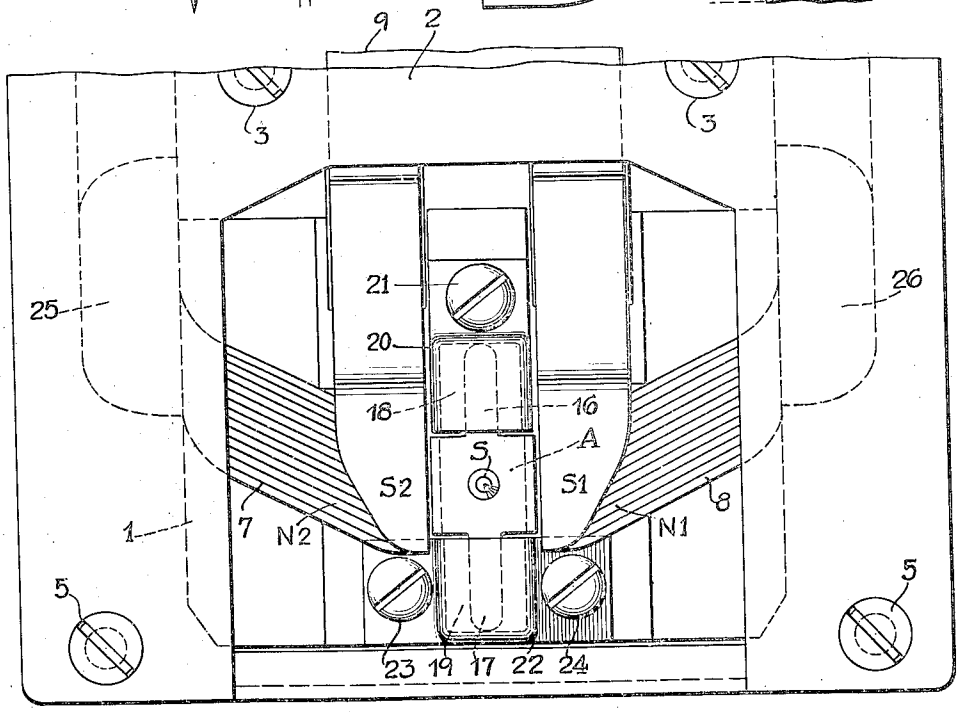

Fig. 3.

INVENTOR.
LIONEL B. CORNWELL.
BY Ward Crosby & Neal
his ATTORNEYS.

Patented June 29, 1948 2,444,336

UNITED STATES PATENT OFFICE

2,444,336

ELECTRICAL SOUND TRANSLATING DEVICE

Lionel B. Cornwell, New Canaan, Conn.

Application January 30, 1946, Serial No. 644,283

2 Claims. (Cl. 179—100.41)

1

This invention relates to electrical sound translating devices of the so-called magnetic type. The invention is useful in translating mechanical motion into electrical impulses as well as in translating electrical impulses into mechanical motion.

As exemplified in the present embodiment the invention takes the form of a phonograph pickup for use with lateral cut sound records; and the following disclosure of such embodiment will be sufficient to permit those skilled in the art to understand the invention and the various uses to which it may be put. It is to be understood that in its broader aspects the invention may be usefully embodied in microphones or other devices to react to any motion of a vibratory nature or to produce such a motion in accordance with varying electrical impulses.

An object of the invention is to provide a device for reproducing sound which has been recorded on a lateral cut record and which will reject extraneous electrical disturbances and which will not be detrimentally affected by such ancillary vertical undulations as are usually present in lateral cut records.

Another object of the invention is to provide a device of the type described of simple construction which will faithfully translate sound and yet withstand hard usage.

Another object of the invention is to provide a device which may be produced at relatively low cost and yet be capable of translating sound in the desired manner.

The invention consists of the novel features, arrangements, construction and combination of parts embodied, by way of example, in the apparatus to be hereinafter more fully described as illustrating a present preferred form of the invention, and the invention will be more particularly pointed out in the appended claims.

Further and more specific objects, features and advantages of the invention will more clearly appear from the detailed description to be given following, taken in connection with the accompanying drawings in which:

Fig. 1 is an enlarged scale front elevational view of a pickup device, in which the coil windings are shown somewhat diagrammatically;

Fig. 2 is a longitudinal sectional view taken along the line 2—2 of Fig. 1;

Fig. 3 is a partial bottom view of Fig. 1 showing further particulars as to the mounting of the armature and showing the lateral spacing between the armature and cooperating pole pieces exaggerated for the purposes of clarity;

Fig. 4 is a somewhat diagrammatic view showing the relationship of certain parts somewhat more clearly;

2

Fig. 5 is a side elevational fragmentary view, partly in section and on an enlarged scale, showing a modification of my invention relative to the arrangement of pole ends and armature mounting;

Fig. 6 is a bottom view of certain parts shown in Fig. 5; and

Fig. 7 is a somewhat diagrammatic front elevational view, partly in section, showing the relationship of certain parts of the modification shown in Figs. 5 and 6 but further enlarged for greater clarity.

Referring to the drawings and more particularly to Fig. 1, the device comprises a main body member 1 formed of aluminum or other non-magnetic material, such as plastic, and a supporting plate 2 secured to the block 1 as by screws 3 (see also Fig. 3). The plate 2 provides a convenient means for attaching the device to a supporting arm, the forward end of which is designated as 4, to the bottom flange of which the plate is attached as by screws such as 5. The magnetic field is provided by a suitable magnet 6 which is polarized, as shown by the letters N and S, which in turn serves to polarize a pair of laminated transformer iron pole pieces 7 and 8 (see also Figs. 2 and 3) of the same or north polarity, and the magnet 6 also polarizes a pole piece 9 of opposite or south polarity. The pole piece 9 is in the form of a strap secured to the back of the block 1 by screws such as 10 and to the underside of block 1 by being clamped between the block and plate 2. The upper end of the pole piece strap 9 extends upwardly beyond the block 1 and together therewith forms a recess in which the magnet 6 is seated. The magnet 6 is clamped between the strap 9 and a soft iron plate 11 by means of screws such as 12, which pass through the plate 11, disposed on opposite sides of the magnet 6 and are in threaded engagement with the strap 9. The screws 12 also pass through a plate 13 between which and the plate 11 the upper ends of the pole pieces 7 and 8 are firmly clamped. The pole pieces 7 and 8 extend downwardly and forwardly through suitable slots provided in the block 1 and are rigidly clamped to said block by means of set screws such as 14. The lower ends of the pole pieces 7 and 8 extend inwardly toward each other in a lateral direction as clearly shown in Figs. 1 and 3 to provide pole ends which are designated N1 and N2. The pole piece plate 9 is bifurcated at its lower forwardly extending end (see also Figs. 2 and 3) so as to provide pole ends

designated S1 and S2 which are disposed beneath the respective pole ends of opposite polarity N1 and N2 and the fixed spacing vertically between the pole ends of opposite polarity is provided by suitable means which takes the form of spacer blocks such as 15 (Fig. 1). The arrangement of these pole ends is more clearly shown in Fig. 4, from which it will be seen that the disposition of these pole ends in the magnetic circuit above described provides laterally spaced air gaps across which flux flows in the same direction between the pole ends N1—N2 and S1—S2.

An armature A is substantially horizontally disposed intermediate the said pole pieces in both a vertical and lateral direction, and the armature carries rigidly secured thereto a stylus S which extends downwardly in a substantially vertical direction and is provided with a suitable point for engagement with a sound record. The armature A (Fig. 3) is provided with a rearwardly extending tongue or arm 16 and a forwardly or oppositely extending corresponding tongue or arm 17. The said arms 16—17 are rigid with the armature A and are preferably formed from the same piece of material and are rectangular in cross section. The center line of the arms 16—17 passes through the center of the armature A and is centrally disposed in a lateral direction between the pole ends N1—S1 and N2—S2 and defines a torsion axis about which the armature may move angularly, in the manner to be more fully pointed out. The arms 16 and 17 are disposed in cooperating openings provided in respective supporting blocks 18 and 19 which are made of rubber or the like material providing the necessary or desirable compliance. In the present embodiment I have obtained entirely satisfactory results in using rubber having a compliance of 15–40 durometer. One of the advantages of the invention resides in the ability to readily obtain the desirable operation of the device by varying the compliance of the supporting blocks, and in the fact that such blocks also provide a damping agent to dissipate any excess vibratory energy that otherwise might produce a non-linear response characteristic over the desired audio range. This means of support provides the desired torsional resiliency permitting angular movement of the armature in response to lateral movements of the stylus point by the lateral undulations of a record, and additionally provides sufficient resiliency in a vertical direction to accommodate such ancillary unevenness of the sound track in a vertical direction as is usually present on a lateral cut record. The block 18 is firmly held in position by bracket 20 which is secured to the block 1 by a screw 21; and the block 19 is similarly supported by a bracket 22 which is rigidly secured to the block 1 by the screws 23—24. The brackets 20 and 22 together with the block 1 provide recesses entirely enclosing the blocks on five sides so as to firmly secure the blocks in the desired position, and this means of support also makes it possible for limited adjustment of the initial compression of the blocks to thereby provide a certain degree of variation in the compliance relative to the torsional movement of the armature.

The pole pieces 7 and 8 (Figs. 1 and 2) are provided with corresponding coils 25—26 which are preferably identical in dimension, number of turns and impedance and serve to transform magnetic fluctuations into corresponding alternating electrical potentials in the manner to be more particularly pointed out following.

The coils are wound and connected in the manner schematically shown in Fig. 1 and the coil terminals 27 and 28 are connected to a suitable receiving circuit, in the manner well known to those skilled in the art. Assuming a lateral vibratory movement to be applied to the stylus, as by the undulations on a lateral cut record, the following magnetic and electrical action takes place. The resilient supporting means is so constructed and arranged that with the stylus S resting on the record as in operating position the armature A is disposed centrally in a vertical direction between the pole pieces of opposite polarity and the supporting blocks allow the armature to rotate about the said torsion axis and provide a restoring force that returns the armature to its horizontal neutral position, as more clearly shown in Fig. 4, as soon as the lateral displacing force such as L is removed from the stylus S. Thus the armature may be displaced in relatively opposite angular directions due to relatively opposite lateral force on the stylus and restore to neutral position when such lateral displacement ceases. Such an arrangement permits very close control of the mechanical impedance of the stylus S to the lateral force encountered on a lateral cut record by controlling or predetermining the compliance of the supporting blocks 18 and 19.

The magnetic pull of the poles N1—S1 and N2—S2 tends to hold the armature in the horizontal neutral position and therefore the only remaining forces tending to move the stylus to one side or the other are the actuating forces such as are provided by the laterally cut undulating groove of the record. The device is so balanced in use that the stylus rides in the groove under a pressure of the order of 10–25 grams weight and hence these actuating forces are relatively very small allowing the use of supporting blocks having extreme compliance assuring perfect tracking at all frequencies and amplitude encountered in the standard lateral cut phonograph record.

Assuming a lateral force L (Fig. 4) moving the stylus to the right, the right hand edge of the armature A moves closer to the pole end N2 and away from the pole end S2 while the left hand edge of the armature moves nearer to the pole end S1 and away from the pole end N1, thereby reducing the flux flowing from N1 and increasing the flux flowing from N2 and consequently inducing an electrical potential in the coils 7 and 8. The coils are so connected that these electrical impulses are additive as a result of angular motion of the armature but are 180° out of phase one with respect to the other to any flux induced from vertical motion of the armature, hence all scratch noise from vertical forces is rejected thus reducing the scratch amplitude that would otherwise result. Furthermore, with the coils thus connected they are 180° out of phase to all external magnetic induction, thereby providing an effective shielding against all A. C. hum, etc.

It will be understood that with the force L applied on the opposite side of the stylus S similar electrical potentials are produced in the coils with similar results, but in this instance the flow of flux from N1 is increased while simultaneously being decreased from N2.

It is noted that the armature A is of less lateral extent than the lateral space between the ends

N1—N2, and accordingly if the device should be carelessly handled so as to exert an abnormal force upwardly on the stylus S the armature will not strike the pole pieces. It is further noted that the armature cannot freeze to any of its adjacent magnetized poles and has unrestricted motion within the maximum limits of all lateral cut records. It will be understood from the foregoing description that in the neutral position shown in Fig. 4 there is substantially no flux flow through the armature and that a neutral stabilizing force is exerted upon the armature; if the armature should move in a clockwise angular direction about its torsional axis the flux will flow from N1 laterally through the armature A into the opposite pole end S1; and as the armature moves in the opposite angular direction the flux flow will pass from N2 laterally through the armature A into the opposite pole end S1. The parts are preferably so constructed and arranged that within the range of operation the armature in its angular movements does not overlap any of the pole ends and its normal vertical movement due to said ancillary undulations in the record does not exceed the vertical spacing of the armature from the pole ends. In practice, I have found it satisfactory to use an armature having a lateral width w of approximately $\frac{3}{32}''$ and a thickness t of .014''; and to space the armature laterally from the pole pieces .0005'' on each side as indicated at x and vertically from the pole pieces a distance of the order of .001'', respectively, from the pole pieces of opposite polarity when the armature is in neutral position, as indicated at y.

Modification

In Figs. 5, 6 and 7 I have illustrated a modification as to certain details. For instance, instead of bifurcating the pole end of the pole piece 9 so as to provide a pair of poles S1—S2 disposed as in the embodiment previously described, a single pole is utilized; and instead of utilizing the rubber block supports the armature may be suspended on a torsion spring.

In this modification the structure is identical with that previously described except in the particulars otherwise shown in Figs. 5, 6 and 7 and only such details as differ from those previously described will be described in detail. The lower end of the pole piece strap, designated 9' is provided with a stamped out recessed portion forming a pole piece common to and of opposite polarity to the poles N1—N2 and is designated Sc. The portion Sc has a central area disposed beneath the armature and is provided with a hole through which the stylus S extends and provides sufficient clearance for lateral motion of the stylus. A torsion spring 30 is rigidly secured to the upper face of the armature A intermediate the ends of the spring which extend outwardly beyond the armature and are rigidly supported as by screws 31—32 passing through the plate 9' and in threaded engagement with suitable portions provided on the block 1'. This spring is centrally disposed with respect to the armature in a lateral direction and its longitudinal axis otherwise corresponds to the torsion axis previously described. The lateral and vertical spacings of the armature with respect to the pole pieces N1—N2 and Sc

are substantially as previously described with reference to the preferred embodiment.

Having thus described my invention with particularity with reference to a preferred embodiment thereof, and having referred to certain modifications, it will be obvious to those skilled in the art, after understanding my invention, that other changes and modifications may be made therein without departing from the spirit and scope of the invention, and I aim in the appended claims to cover such changes and modifications as are within the scope of the invention.

What I claim is:

1. In a pickup device of the magnetic type, the combination of a magnetic circuit having two flux paths providing a pair of laterally spaced upwardly and downwardly extending air gaps across which flux flows in the same direction to supply a pair of fields for an armature, electrical coils surrounding respective of said paths on the same polarity side only of said gaps, an armature centrally disposed relative to said fields, torsion resilient means supporting said armature for rocking motion within the fields of influence of both of said paths and also providing compliance to ancillary vertical movement of said armature, and an electrical circuit including said coils for generating electrical impulses in accordance with flux modulation responsive to said armature motion in a lateral direction while rejecting electrical impulses due to motion of said armature in a vertical direction.

2. In a magnetic pickup device, the combination of a magnetic circuit providing a flux field including a pair of laterally spaced and upwardly and downwardly extending air gaps, an armature disposed in the field of influence of said flux field and extending in a direction transverse the flux flow across said gaps, said armature in neutral position being substantially horizontal, a stylus rigidly secured to said armature and extending substantially vertically downwardly therefrom, and resilient supporting means for said armature including a torsion spring secured intermediate its ends to said armature and having oppositely disposed ends extending in a direction forwardly and rearwardly beyond said armature secured to relatively rigid portions of said device, to thereby yieldingly torsionally support said armature in said neutral position for movement about a torsion axis disposed intermediate said air gaps and extending in a forwardly and rearwardly direction.

LIONEL B. CORNWELL.

REFERENCES CITED

The following references are of record in the file of this patent:

UNITED STATES PATENTS

Number	Name	Date
1,804,961	Thomas	May 12, 1934
1,916,703	White et al.	July 4, 1933
2,108,275	Vermeulen	Feb. 15, 1938

FOREIGN PATENTS

Number	Country	Date
355,227	Great Britain	Aug. 17, 1931