Jan. 19, 1965 R. E. O'LEARY 3,166,316

BATTING PRACTICE DEVICE COMPRISING A TETHERED BALL DRIVEN BY A MOTOR THROUGH A FRICTION CLUTCH

Filed June 10, 1963

Fig. 2.

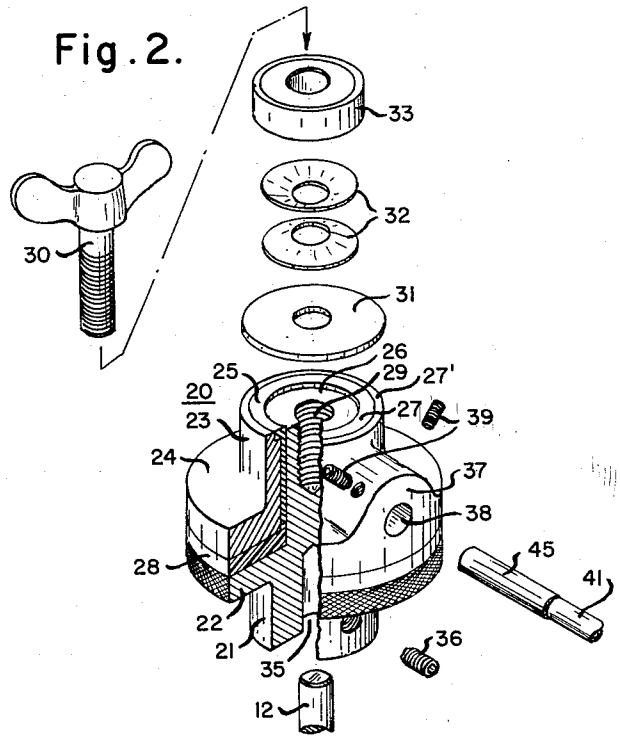

Fig. 1.

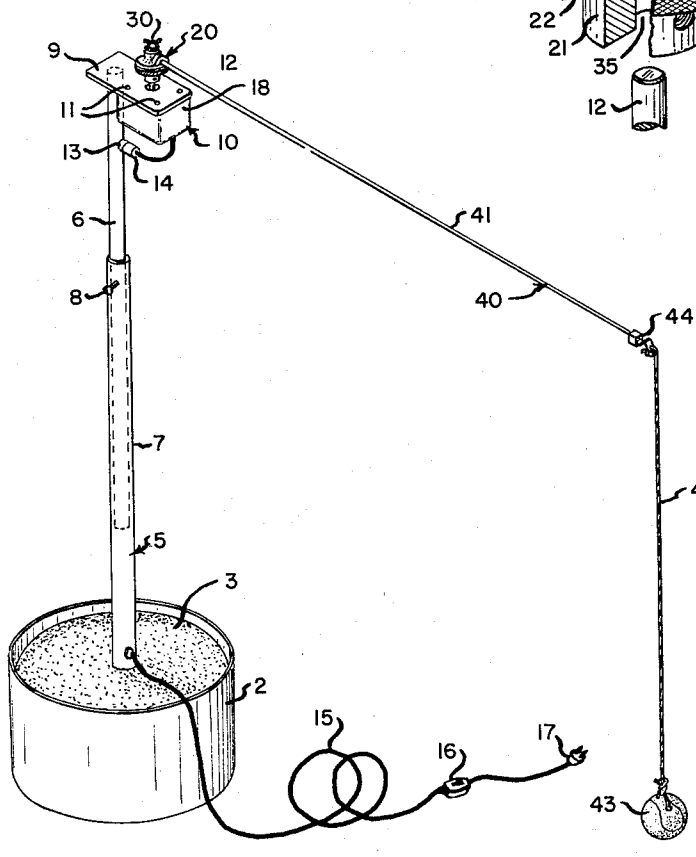

INVENTOR

Robert E. O'Leary

By Hoopes, Lennard & Buell

his attorneys

United States Patent Office 3,166,316 Patented Jan. 19, 1965

3,166,316

BATTING PRACTICE DEVICE COMPRISING A TETHERED BALL DRIVEN BY A MOTOR THROUGH A FRICTION CLUTCH

Robert E. O'Leary, McKeesport, Pa., assignor to Olos Corp., Pittsburgh, Pa., a corporation of Pennsylvania

Filed June 10, 1963, Ser. No. 286,574
3 Claims. (Cl. 273—26)

This invention relates broadly to baseball batting practice devices and more particularly to such devices where the ball is suspended from and tethered to a vertical post and swung around in a horizontal circle by a motor.

Batting practice devices where the ball is tethered to an upstanding post are well known and have been in existence for many years. Furthermore, some of these devices have heretofore been motorized to swing the ball in a horizontal circle; for example see U.S. Patent Nos. 2,058,277 to Walther and 2,134,328 to Dixon.

The advantages of a motorized batting practice device over a stationary or manually operated batting practice device are obvious. However, earlier motorized devices have not received popular acceptance for several reasons. Among the reasons are that they have been, generally speaking, very cumbersome in that they are heavy and awkward to handle, they have been too complicated and costly to make, and further, they have been too susceptible to injury during operation.

The present invention obviates the foregoing shortcomings. By virtue of the present invention's unique arrangement of parts there is very little additional weight or size to the device as compared to unmotorized or manually operated batting practice devices. Its cost is favorably comparable and little more than manually operated devices because of its simplified and unique arrangement of parts. And finally it is not susceptible to injury during operation as the earlier motorized devices were.

The present invention provides a rigid upstanding post, tether means including a ball secured to a line which in turn is secured to a stiff flexible horizontal arm member, motor means disposed near the upper end of said post, said motor means having a rotating drive member, and tether carrying means in which said arm member is secured, said tether carrying means being connected to the drive member through frictionally engaging clutch means, whereby said tether carrying means and the tether ball means are rotated horizontally with respect to said post member, said clutch means permitting said tether ball means and tether carrying means to be rotated by external forces against the rotational movement of the drive member without injury to said motor means, the degree of frictional engagement of said clutch means being selectively variable whereby the power from said motor means to said tether carrying means may be selectively varied to control the rotational speed of said tether ball means.

My invention further provides an upstanding post having upper and lower portions in a selectively lockable telescopic relation whereby the height of said post is selectively adjustable.

I further preferably provide a frictionally engaging clutch means comprising a hub member secured to said motor drive member, said hub member having an annular flange, a capping member swingably disposed on said hub member, tether carrying means being secured to said capping member, said capping member having an annular flange adjacent and annularly coextensive with said hub member flange, a clutch plate member disposed on said hub between said flanges and in frictional engagement with the respective flange surfaces, said capping member and hub member being held together by resilient compression means biasing said capping member against said clutch plate member, said compression means being selectively variable whereby the pressure of the capping member flange against the clutch plate member may be selectively varied.

Other details, objects and advantages of the invention will become apparent from the following description of a present preferred embodiment thereof proceeds.

In the accompanying drawings I have shown a present preferred embodiment of the invention in which

FIGURE 1 is a perspective view of the complete device; and

FIGURE 2 is an exploded isometric view partly in section of the clutch means assembly.

Referring initially to FIGURE 1, I provide generally a rigid upstanding post member **5**, motor means **10**, clutch means **20** and tether ball means **40**.

Preferably, post member **5** comprises an upper post element **6** which telescopes into a lower post element **7** and can be locked therein by appropriate means such as the thumbscrew **8**. Thus, the height of the post may be set at whatever height is best suitable for the batter.

Motor means **10** is secured as by screws **11** to a mounting plate **9** secured to the top of post **5**. Motor means **10** preferably is a standard electrical motor (not shown) having a drive shaft **12** extending therefrom. Motor means **10** may be a reversible electric motor whereby tether ball means **40** can be swung in either direction for left and right handed batters or it may be a non-reversible motor for either left or right handed batters. The mounting of motor means **10** as shown been specifically simplified to facilitate the changing of a motor wound to rotate the tether ball one way for a motor wound to rotate the tether ball in the opposite direction. In this respect, it should be noted that an electrical receptacle **13** for the motor plug **14** is provided in upper post element **6** near motor means **10**, with the main electrical cord **15** extending from receptacle **13** through post **5** and out near the bottom of post **5** with the conventional switch **16** and plug **17** at the other end of cord **15**. This too facilitates the quick and easy change of motors if desired, or the removal of the motor indoors out of the weather if the device is going to be left outside. Otherwise, the motor is preferably protected from the weather as by the cover **18**.

It should be noted that because of my unique arrangement above described the electric motor of motor means **10** may be a relatively small electrical motor of low fractional horsepower on the order of $\frac{1}{70}$ of a horsepower because it does not have to rotate the vertical post in addition to the tether ball means as has been taught in the art heretofore.

Tether ball means **40** is connected through clutch means **20** to drive shaft **12** for rotation about post **5**.

Clutch means **20** is shown in detail in FIGURE 2. Referring to FIGURE 2, clutch means **20** includes a hub **21** having an annular flange **22** and a cap **23** having an annular flange **24** which is swingably disposed on hub **21**, the swingability of cap **23** being further facilitated by the bushing **25**. It should be noted that the upper surface **26** of hub **21** is disposed at a level below the surfaces **27** and **27'** of bushing **25** and cap **23**, the significance of which will be more fully understood as the present description continues. As is clearly illustrated in FIGURE 2, cap **23** is disposed on hub **21** so that their respective flanges **24** and **22** are facing adjacent one another. A clutch plate **28** is disposed between flanges **22** and **24** and as there illustrated the flanges and clutch plate **28** are preferably all annularly coextensive. Preferably, clutch plate **28** is made of a suitable material that will permit slippage such as leather or a comparable plastic material. To hold clutch means **20** in assembly, hub **21** contains a threaded opening **29** in its upper portion which receives the wing headed bolt **30** in threaded engagement therein. I further

provide a washer 31 which is preferably annularly coextensive with surfaces 27 and 27' and is disposed on bolt 30 adjacent surfaces 27 and 27'. Spring washers 32 and a thrust bearing 33 are disposed on bolt 30 thereafter in that order. It is clear from this description with reference to the drawing that by tightening down bolt 30 to compress spring washers 32, a compressive force is applied to surfaces 27 and 27', which in turn presses flange 24 against clutch plate 28. It is also clear that by adjusting bolt 30 the pressure of flange 24 against clutch plate 28 may be varied as desired.

As further illustrated in FIGURE 2, hub 21 contains an axial opening 35 in its lower portion adapted to receive the end of motor drive shaft 12 therein. In this way clutch means 20 is mounted on motor means 10 and is held thereon to rotate with motor drive shaft 12 by suitable means such as set screw 36.

Tether ball means 40 preferably comprises a stiff resilient horizontal arm member or wand 41, a line or cord 42 and a ball 43. I have found that a wand made of fiber glass material is very suitable for this purpose as it is strong and durable and has considerable resilient play in it. Cord 42 is secured to the end of wand 41 by any suitable means such as the clamp 44, and ball 43 is tied to the end of cord 42. Preferably, I recommend using a ball lighter than a baseball, such as a tennis ball, although a heavier ball can be used if desired. I have found that a ball, like a tennis ball, holds up longer to the punishment given it by a batter, than does a baseball and furthermore permits tennis players to practice their swing as well as baseball players.

Tether ball means 40 is secured to a carrying means 37 which is secured to cap 23 or, as shown in FIGURE 2, may be formed as a part of cap 23, and which has an opening 38 therein into which the end of wand 41 is inserted and held therein by appropriate means such as set screws 39.

Preferably I further provide a metal tip 45 on the end of wand 41 to facilitate the clamping of wand 41 in carrying means 37. Furthermore, as is shown in FIGURE 2, the outer surface of flange 22 is knurled to facilitate gripping hub 21 when turning wing bolt 30 to adjust the pressure against clutch plate 28. In addition, I also preferably provide a base 2 to which post 5 is secured. Base 2 is a cylindrical shell which may be filled with ballast 3 such as sand which facilitates using the device indoors. Otherwise if a permanent outdoor installation is desired base 2 can be buried in the ground and filled with concrete.

From the foregoing description it should be clear that when motor means 10 is energized hub 21 will be rotated with motor drive shaft 12 and if bolt 30 is sufficiently tightened down, the frictional engagement between clutch plate 28 and flanges 22 and 24 will cause tether ball means 40 to rotate also. It should be further apparent that there will be some degree of slippage in the frictional engagement between clutch plate 28 and flange 24 and that the more bolt 30 is turned down the less slippage there will be, which, of course, means the faster tether ball means 40 will swing about post 5; and conversely the less bolt 30 is tightened down the more slippage there will be between clutch plate 28 and flange 34 and the slower tether ball means 40 will swing.

It is also apparent that when ball 43 is struck by some outside force such as a bat against the normal direction

of rotation of tether ball means 40, the slippage between clutch plate 28 and flange 24 will permit tether ball means 40 and cap 23 to be rotated contrary to the direction of rotation of hub 21 and motor drive shaft 12, both of which continue to rotate in said normal direction, without any injury to motor means 10. Of course within a short time the contrary rotation of tether ball means 40 will slow to a stop and then commence again to rotate in the normal direction with hub 21 and drive shaft 12. It should be noted that thrust bearing 33 permits bolt 30 to rotate with hub 21 without inadvertently tightening or loosening when tether ball means 40 is caused to rotate in a contrary direction.

While I have shown and described a present preferred embodiment of the invention, it is to be understood that the invention is not limited thereto but may be otherwise variously embodied within the scope of the following claims.

I claim:

1. A batting practice device comprising a rigid vertical post member, tether ball means including a ball secured to a line which in turn is secured to a stiff flexible horizontal arm member, motor means disposed near the upper end of said post member, said motor means having a rotating drive member, and tether carrying means in which said arm member is secured, said tether carrying means being connected to said drive member through frictionally engaging clutch means whereby said tether carrying means and the tether ball means are rotated horizontally with respect to said post member, said clutch means permitting said tether ball means and tether carrying means to be rotated by external forces against the rotational movement of the drive member without injury to said motor means, and means for selectively varying the degree of frictional engagement of said clutch means, whereby the power imparted from said motor means to said tether carrying means may be selectively varied to control the rotational speed of said tether ball means.

2. A batting practice device as claimed in claim 1 wherein said post member comprises upper and lower portions in a selectively lockable telescopic relation whereby the height of said post member is selectively adjustable.

3. A batting practice device as claimed in claim 1 wherein said clutch means comprises a hub member secured to said motor drive member, said hub member having an annular flange, a capping member swingably disposed on said hub member with said tether carrying means being secured thereto, said capping member having an annular flange adjacent and annularly coextensive with said hub member flange, a clutch plate member disposed on said hub between said flanges and in frictional engagement with the respective flange surfaces, said capping member and hub member being held together by resilient compression means biasing said capping member against said clutch plate member, said compression means being selectively variable whereby the pressure of the capping member flange against the clutch plate member may be selectively varied.

References Cited in the file of this patent

UNITED STATES PATENTS

2,058,277	Walther	Oct. 20, 1936
2,134,328	Dickson	Oct. 25, 1938
2,732,656	Cohn	Jan. 31, 1956